查询Si3200-BS供应商 捷多邦，专业PCB打样工厂，24小时加急出货

SILICON LABORATORIES

Si3232

DUAL PROGRAMMABLE CMOS SLIC WITH LINE MONITORING

Features

- Ideal for customer premise applications
- Low standby power consumption: <65 mW per channel
- Internal balanced ringing to 65 V_{rms}
- Software programmable parameters:
  - Ringing frequency, amplitude, cadence, and waveshape
  - Two-wire ac impedance
  - DC loop feed (18–45 mA)
  - Loop closure and ring trip thresholds
  - Ground key detect threshold
- Automatic switching of up to three battery supplies
- On-hook transmission
- Loop or ground start operation with smooth/abrupt polarity reversal
- SPI bus digital interface with programmable interrupts
- 3.3 V operation
- GR-909 loop diagnostics and loopback testing
- 12 kHz/16 kHz pulse metering
- Lead-free/RoHS compatible packages available

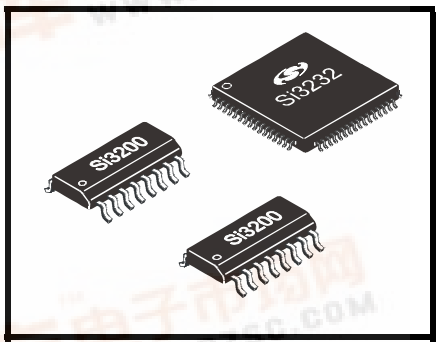

Ordering Information

See page 122.

U.S. Patent #6,567,521
U.S. Patent #6,812,744
Other patents pending

Applications

- Cable telephony
- Wireless local loop
- Voice over IP/voice over DSL
- ISDN terminal adapters

Description

The Si3232 is a low-voltage CMOS SLIC that offers a low-cost, fully software-programmable, dual-channel, analog telephone interface for customer premise (CPE) applications. Internal ringing generation eliminates centralized ringers and ringing relays, and on-chip subscriber loop testing allows remote line card and loop diagnostics with no external test equipment or relays. The Si3232 performs all programmable SLIC functions in compliance with all relevant LSSGR, ITU, and ETSI specifications; all high-voltage functions are performed by the Si3200 linefeed interface IC. The Si3232 operates from a single 3.3 V supply and interfaces to a standard SPI bus digital interface for control. The Si3200 operates from a 3.3 V supply as well as high-voltage battery supplies up to 100 V. The Si3232 is available in a 64-pin thin quad flat package (TQFP), and the Si3200 is available in a thermally-enhanced 16-pin small-outline (SOIC) package.

Functional Block Diagram

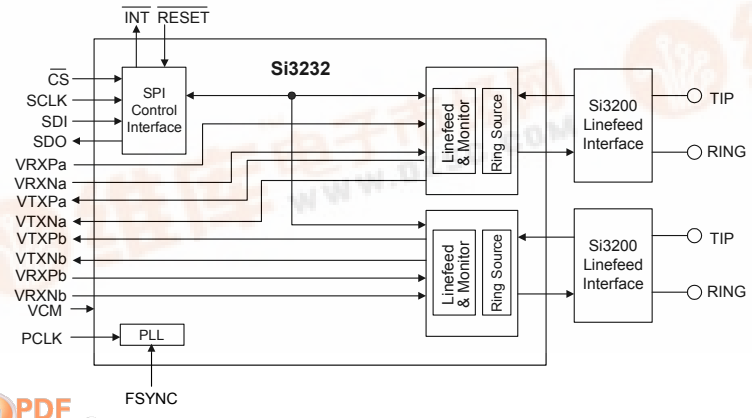

找PDF 维库一下 pdf.dzsc.com

 Copyright © 2005 by Silicon Laboratories

This information applies to a product under development. Its characteristics and specifications are subject to change without notice.

TABLE OF CONTENTS

Section **Page**

1. Electrical Specifications 4
2. Typical Application Schematic 17
3. Bill of Materials 18
4. Functional Description 19
4.1. Linefeed Architecture 19
4.2. Power Supply Transients on the Si3200 19
4.3. DC Feed Characteristics 20
4.4. Linefeed Calibration 25
4.5. Automatic Dual Battery Switching 29
4.6. Ringing Generation 37
4.7. Internal Unbalanced Ringing 39
4.8. Ring Trip Detection 41
4.9. Ring Trip Timeout Counter 41
4.10. Ring Trip Debounce Interval 41
4.11. Loop Closure Mask 42
4.12. Relay Driver Considerations 44
4.13. Two-Wire Impedance Synthesis 46
4.14. Audio Path Processing 48
4.15. System Clock Generation 49
4.16. SPI Control Interface 50
4.17. Si3232 RAM and Register Space 52
4.18. System Testing 57
5. 8-Bit Control Register Summary 61
6. 8-Bit Control Descriptions 63
7. 16-Bit RAM Address Summary 90
8. 16-Bit Control Descriptions 93
9. Pin Descriptions: Si3232 117
10. Pin Descriptions: Si3200 120
11. Ordering Guide 122
12. Product Identification 122
12.1. Part Designators (Partial List) 122
13. Package Outline: 64-Pin eTQFP 123
14. Package Outline: 16-Pin ESOIC 124
Support Documentation 125
Document Change List 126
Contact Information 128

1. Electrical Specifications

Table 1. Absolute Maximum Ratings and Thermal Information[1]

Parameter	Symbol	Test Condition	Value	Unit
Supply Voltage, Si3200 and Si3232	V_{DD}, V_{DD1}–V_{DD4}		–0.5 to 6.0	V
High Battery Supply Voltage[2]	V_{BATH}	Continuous	0.4 to –104	V
		10 ms	0.4 to –109	
Low Battery Supply Voltage, Si3200[2]	V_{BAT}, V_{BATL}	Continuous	V_{BATH}	V
TIP or RING Voltage, Si3200	V_{TIP}, V_{RING}	Continuous Pulse < 10 µs Pulse < 4 µs	–104 V_{BATH} –15 V_{BATH} –35	V V V
TIP, RING Current, Si3200	I_{TIP}, I_{RING}		±100	mA
STIPAC, STIPDC, SRINGAC, SRINGDC Current, Si3232			±20	mA
Input Current, Digital Input Pins	I_{IN}	Continuous	±10	mA
Digital Input Voltage	V_{IND}		–0.3 to (V_{DD} + 0.3)	V
Operating Temperature Range	T_A		–40 to 100	°C
Storage Temperature Range	T_{STG}		–40 to 150	°C
Si3232 Thermal Resistance, Typical[3] (TQFP-64 ePad)	θ_{JA}		25	°C/W
Si3200 Thermal Resistance, Typical[3] (SOIC-16 ePad)	θ_{JA}		55	°C/W
Continuous Power Dissipation, Si3200[4]	P_D	T_A = 85 °C, SOIC-16	1	W
Continuous Power Dissipation, Si3232	P_D	T_A = 85 °C, TQFP-64	1.6	W

Notes:

1. Permanent device damage may occur if the above Absolute Maximum Ratings are exceeded. Functional operation should be restricted to the conditions as specified in the operational sections of this data sheet. Exposure to absolute maximum rating conditions for extended periods may affect device reliability.
2. The dv/dt of the voltage applied to the V_{BAT}, V_{BATH}, and V_{BATL} pins must be limited to 10 V/µs.
3. The thermal resistance of an exposed pad package is assured when the recommended PCB layout guidelines are followed correctly. The specified performance requires that the exposed pad be soldered to an exposed copper surface of equal size and that multiple vias are added to enable heat transfer between the top-side copper surface and a large internal copper ground plane. Refer to “AN55: Dual ProSLIC™ User Guide” or to the Si3232 evaluation board data sheet for specific layout examples.
4. On-chip thermal limiting circuitry will shut down the circuit at a junction temperature of approximately 150 °C. For optimal reliability, operation above 140 °C junction temperature should be avoided.

Table 2. Recommended Operating Conditions

Parameter	Symbol	Test Condition	Min*	Typ	Max*	Unit
Ambient Temperature	T_A	K-grade	0	25	70	^oC
Ambient Temperature	T_A	B-grade	–40	25	85	^oC
Si3232 Supply Voltage	V_{DD1}–V_{DD4}		3.13	3.3	3.47	V
Si3200 Supply Voltage	V_{DD}		3.13	3.3	3.47	V
High Battery Supply Voltage, Si3200	V_{BATH}		–15	—	–99	V
Low Battery Supply Voltage, Si3200	V_{BATL}		–15	—	V_{BATH}	V

***Note:** All minimum and maximum specifications are guaranteed and apply across the recommended operating conditions. Typical values apply at nominal supply voltages and an operating temperature of 25 ^oC unless otherwise stated.

Table 3. Power Supply Characteristics[1]

(V_{DD}, V_{DD1}–V_{DD4} = 3.3 V, T_A = 0 to 70 °C for K-Grade, –40 to 85 °C for B-Grade)

Parameter	Symbol	Test Condition	Min	Typ	Max	Unit
V_{DD1}–V_{DD4} Supply Current (Si3232)	I_{VDD1}–I_{VDD4}	Sleep mode, RESET = 0	—	1	—	mA
		Open (high impedance)	—	15	—	mA
		Active on-hook standby	—	15	—	mA
		Forward/reverse active off-hook ABIAS = 4 mA	—	20	—	mA
		Forward/reverse active OHT OBIAS = 4 mA	—	12 + I_{LIM}	—	mA
		Ringing, V_{RING} = 45 V_{rms}, V_{BAT} = –70 V, Sine Wave, 1 REN load[2]	—	28	—	mA
V_{DD} Supply Current (Si3200)	I_{VDD}	Sleep mode, RESET = 0	—	100	—	µA
		Open (high impedance)	—	100	—	µA
		Active on-hook standby	—	110	—	µA
		Forward/reverse active off-hook, ABIAS = 4 mA, V_{BAT} = –24 V	—	110	—	µA
		Forward/reverse OHT, OBIAS = 4 mA, V_{BAT} = –70 V	—	110	—	µA
		Ringing, V_{RING} = 45 V_{rms}, VBAT = –70 V, Sine Wave, 7 REN load	—	110	—	µA
V_{BAT} Supply Current (Si3200)	I_{VBAT}	Sleep mode, RESET = 0, V_{BAT} = –70 V	—	100	—	µA
		Open (high impedance), V_{BAT} = –70 V	—	225	—	µA
		Active on-hook standby, V_{BAT} = –70 V	—	400	—	µA
		Forward/reverse active off-hook, ABIAS = 4 mA, V_{BAT} = –24 V	—	4.4 + I_{LIM}	—	mA
		Forward/reverse OHT, OBIAS = 4 mA, V_{BAT} = –70 V	—	8.4	—	mA
		Ringing, V_{RING} = 45 V_{rms}, V_{BAT} = –70 V, Sine wave, 1 REN load[2]	—	6	—	mA

Notes:
1. All specifications are for a single channel based on measurements with both channels in the same operating state.
2. See “4.7.4. Ringing Power Considerations” for current and power consumption under other operating conditions.
3. Power consumption does not include additional power required for dc loop feed. Total system power consumption must include an additional V_{BAT} x I_{LIM} term.

Table 3. Power Supply Characteristics[1] (Continued)

(V_{DD}, V_{DD1}–V_{DD4} = 3.3 V, T_A = 0 to 70 °C for K-Grade, –40 to 85 °C for B-Grade)

Parameter	Symbol	Test Condition	Min	Typ	Max	Unit
Power Consumption	P_{SLEEP}	Sleep mode, RESET = 0, V_{BAT} = –70 V	—	8	—	mW
	P_{OPEN}	Open (high impedance), V_{BAT} = –70 V	—	65	—	mW
	P_{STBY}	Active on-hook standby, V_{BAT} = –48 V	—	70	—	mW
	P_{STBY}	Active on-hook standby, V_{BAT} = –70 V	—	80	—	mW
	P_{ACTIVE}[3]	Forward/reverse active off-hook, ABIAS = 4 mA, V_{BAT} = –24 V	—	175	—	mW
	P_{ACTIVE}[3]	Forward/reverse active off-hook, ABIAS = 4 mA, V_{BAT} = –48 V	—	280	—	mW
	P_{OHT}	Forward/reverse OHT, OBIAS = 4 mA, V_{BAT} = –48 V	—	500	—	mW
	P_{OHT}	Forward/reverse OHT, OBIAS = 4 mA, V_{BAT} = –70 V	—	685	—	mW
	P_{RING}	Ringing, V_{RING} = 45 V_{rms}, V_{BAT} = –70 V, Sine Wave, 1 REN load[2]	—	516	—	mW

Notes:
1. All specifications are for a single channel based on measurements with both channels in the same operating state.
2. See “4.7.4. Ringing Power Considerations” for current and power consumption under other operating conditions.
3. Power consumption does not include additional power required for dc loop feed. Total system power consumption must include an additional V_{BAT} x I_{LIM} term.

Table 4. AC Characteristics

(V_{DD}, V_{DD1}–V_{DD4} = 3.13 to 3.47 V, T_A = 0 to 70 °C for K-Grade, –40 to 85 °C for B-Grade)

Parameter	Test Condition	Min	Typ	Max	Unit
TX/RX Performance					
TX Full Scale Output	VTXP–XTXN	0.1	—	V_{DD}–0.1	V
RX Full Scale Input	VRXP–VRXN, ARX = 0 dB ARX = –3.52 dB ARX = –6.02 dB	0.25 0 0	— — —	V_{DD}–0.25 V_{DD} V_{DD}	V V V
Analog Input/Output Common Mode Voltage	CMTXSEL = 1 CMTXSEL = 0	0.6 —	— 1.5	1.5 —	V V
Overload Level	ATX stage = 0 dB, THD = 1.5%	2.5	—	—	V_{PK}
Overload Compression		Figure 4	—	—	
Single Frequency Distortion[1]	2-wire to 4-wire or 4-wire to 2-wire: 200 Hz–3.4 kHz	—	–74	–68	dB
	2-wire to 4-wire to 2-wire: 200 Hz–3.4 kHz	—	–74	–65	dB
Signal-to-(Noise + Distortion) Ratio[2]	200 Hz–3.4 kHz Active off-hook, and OHT, any Z_T	—	–74	–68	
Intermodulation Distortion		—	—	–41	dB
Gain Accuracy[2]	2-Wire to 4-Wire or 4-Wire to 2-Wire, 1014 Hz, Any gain setting	–0.25	—	+0.25	dB
Gain Distortion vs. Frequency	–3 dB corners	0.01	—	10	kHz
Gain Tracking	1014 Hz sine wave, reference level –10 dBm signal level: 3 dB to –37 dB –37 dB to –50 dB –50 dB to –60 dB	— — —	— — —	±0.25 ±0.5 ±1.0	dB dB dB
Crosstalk between channels TX or RX to TX TX to RX to RX	0 dBm0, 300 Hz to 3.4 kHz 300 Hz to 3.4 kHz	— —	— —	–75 –75	dB dB
2-Wire Return Loss[3]	200 Hz to 3.4 kHz	26	30	—	dB

Notes:

1. The input signal level should be 0 dBm0 for frequencies greater than 100 Hz. For 100 Hz and below, the level should be –10 dBm0. The output signal magnitude at any other frequency will be smaller than the maximum value specified.
2. Analog signal measured as $V_{TIP} – V_{RING}$. Assumes ideal line impedance matching.
3. V_{DD} = 3.3 V, V_{BAT} = –52 V, no fuse resistors, R_L = 600 Ω, Z_S = 600 Ω synthesized using RS register coefficients.
4. The level of any unwanted tones within the bandwidth of 0 to 4 kHz will not exceed –55 dBm.
5. The OBIAS and ABIAS registers program the dc bias current through the SLIC in the on-hook transmission and off-hook active conditions, respectively. This per-pin total current setting should be selected such that it can accommodate the sum of the metallic and longitudinal currents through each of the TIP and RING leads for a given application.

Table 4. AC Characteristics (Continued)

(V_{DD}, V_{DD1}–V_{DD4} = 3.13 to 3.47 V, T_A = 0 to 70 °C for K-Grade, –40 to 85 °C for B-Grade)

Parameter	Test Condition	Min	Typ	Max	Unit
Noise Performance					
Idle Channel Noise[4]	C-Message weighted	—	12	15	dBrnC
	Psophometric weighted	—	–78	–75	dBmP
	3 kHz flat	—	—	18	dBrn
PSRR from V_{DD1} – V_{DD4}	RX and TX, dc to 3.4 kHz	40	—	—	dB
PSRR from V_{BAT}	RX and TX, dc to 3.4 kHz	60	—	—	dB
Longitudinal Performance					
Longitudinal to Metallic Balance (forward or reverse)	200 Hz to 1 kHz	58	63	—	dB
	1 kHz to 3.4 kHz	53	58	—	dB
Metallic to Longitudinal Balance	200 Hz to 3.4 kHz	40	—	—	dB
Longitudinal Impedance[5]	200 Hz to 3.4 kHz at TIP or RING Register-dependent OBIAS/ABIAS				
	00 = 4 mA	—	50	—	Ω
	01 = 8 mA	—	25	—	Ω
	10 = 12 mA	—	25	—	Ω
	11 = 16 mA	—	20	—	Ω
Longitudinal Current per Pin[5]	Active off-hook 200 Hz to 3.4 kHz Register-dependent OBIAS/ABIAS				
	00 = 4 mA	—	4	—	mA
	01 = 8 mA	—	8	—	mA
	10 = 12 mA	—	8	—	mA
	11 = 16 mA	—	10	—	mA

Notes:

1. The input signal level should be 0 dBm0 for frequencies greater than 100 Hz. For 100 Hz and below, the level should be –10 dBm0. The output signal magnitude at any other frequency will be smaller than the maximum value specified.
2. Analog signal measured as V_{TIP} – V_{RING}. Assumes ideal line impedance matching.
3. V_{DD} = 3.3 V, V_{BAT} = –52 V, no fuse resistors, R_L = 600 Ω, Z_S = 600 Ω synthesized using RS register coefficients.
4. The level of any unwanted tones within the bandwidth of 0 to 4 kHz will not exceed –55 dBm.
5. The OBIAS and ABIAS registers program the dc bias current through the SLIC in the on-hook transmission and off-hook active conditions, respectively. This per-pin total current setting should be selected such that it can accommodate the sum of the metallic and longitudinal currents through each of the TIP and RING leads for a given application.

Table 5. Linefeed Characteristics

(V_{DD}, V_{DD1}–V_{DD4} = 3.13 to 3.47 V, T_A = 0 to 70 °C for K-Grade, –40 to 85 °C for B-Grade)

Parameter	Symbol	Test Condition	Min	Typ	Max	Unit
DC Loop Current Accuracy		I_{LIM} = 18 mA	—	—	±10	%
DC Open Circuit Voltage Accuracy		Active Mode; V_{OC} = 48 V, $V_{TIP} – V_{RING}$	—	—	±4	V
DC Differential Output Resistance	R_{DO}	$I_{LOOP} < I_{LIM}$	—	320	—	Ω
DC On-Hook Voltage Accuracy—Ground Start	V_{OHTO}	$I_{RING}<I_{LIM}$; V_{RING} wrt ground V_{RING} = –51 V	—	—	±4	V
DC Output Resistance—Ground Start	R_{ROTO}	$I_{RING}<I_{LIM}$; RING to ground	—	320	—	Ω
DC Output Resistance—Ground Start	R_{TOTO}	TIP to ground	300	—	—	kΩ
Loop Closure Detect Threshold Accuracy		I_{THR} = 13 mA	—	±10	±15	%
Ground Key Detect Threshold Accuracy		I_{THR} = 13 mA	—	±10	±15	%
Ring Trip Threshold Accuracy		ac Detection, V_{RING} = 70 V_{PK}, I_{TH} = 80 mA	—	±4	±5	mA
		dc detection, 20 V dc offset, I_{TH} = 13 mA	—	±1.5	±2	mA
Ringing Amplitude*	V_{RING}	Open circuit, V_{BATH} = 100 V	93	—	—	V_{PK}
		5 REN load, R_{LOOP} = 0 Ω, V_{BATH} = 100 V	82	—	—	V_{PK}
Sinusoidal Ringing Total Harmonic Distortion	R_{THD}		—	2	—	%
Ringing Frequency Accuracy		f = 16 Hz to 100 Hz	—	—	±1	%
Ringing Cadence Accuracy		Accuracy of ON/OFF times	—	—	±50	ms
Calibration Time		↑CAL to ↓CAL bit	—	—	600	ms
Loop Voltage Sense Accuracy		Accuracy of boundaries for each output Code; $V_{TIP} – V_{RING}$ = 48 V	—	±2	±4	%
Loop Current Sense Accuracy		Accuracy of boundaries for each output code; I_{LOOP} = 18 mA	—	±7	±10	%
Power Alarm Threshold Accuracy		Power Threshold = 300 mW	—	—	±25	%

***Note:** Ringing amplitude is set for 93 V peak using the RINGAMP RAM address and measured at TIP-RING using no series protection resistance.

Table 6. Monitor ADC Characteristics

(V_{DD}, V_{DD1}–V_{DD4} = 3.13 to 3.47 V, T_A = 0 to 70 °C for K-Grade, –40 to 85 °C for B-Grade)

Parameter	Symbol	Test Condition	Min	Typ	Max	Unit
Resolution			—	8	—	Bits
Differential Nonlinearity	DNL		— –1.0	±0.75 —	— +1.5	LSB LSB
Integral Nonlinearity	INL		—	±0.6	±1.5	LSB
Gain Error			—	±0.1	±0.25	LSB

Table 7. Si3200 Characteristics

(V_{DD} = 3.13 to 3.47 V, T_A = 0 to 70 °C for K-Grade, –40 to 85 °C for B-Grade)

Parameter	Symbol	Test Condition	Min	Typ	Max	Unit
TIP/RING Pulldown Transistor Saturation Voltage	V_{CM}	V_{RING} – V_{BAT} (Forward), V_{TIP} – V_{BAT} (Reverse) I_{LIM} = 22 mA, I_{ABIAS} = 4 mA[1] I_{LIM} = 45 mA, I_{ABIAS} = 16 mA[1]	 — —	 3 4	 — —	 V V
TIP/RING Pullup Transistor Saturation Voltage	V_{OV}	GND – V_{TIP} (Forward) GND – V_{RING} (Reverse) I_{LIM} = 22 mA[1] I_{LIM} = 45 mA[1]	 — —	 3 4	 — —	 V V
Battery Switch Saturation Impedance	R_{SAT}	(V_{BAT} – V_{BATH})/I_{OUT} (Note 2)	—	15	—	W
OPEN State TIP/RING Leakage Current	I_{LKG}	R_L = 0 Ω	—	—	100	µA
Internal Blocking Diode Forward Voltage	V_F	V_{BAT} – V_{BATL} (Note 2)	—	0.8	—	V

Notes:
1. V_{AC} = 2.5 V_{PK}, R_{LOAD} = 600 Ω.
2. I_{OUT} = 60 mA

Table 8. DC Characteristics, $V_{DDA} = V_{DDD} = V_{CC} = 3.3$ V

(V_{DD}, V_{DD1}–V_{DD4} = 3.13 V to 3.47 V, T_A = 0 to 70 °C for K-Grade, –40 to 85 °C for B-Grade)

Parameter	Symbol	Test Condition	Min	Typ	Max	Unit
High Level Input Voltage	V_{IH}		0.7 x V_{DD}	—	3.47	V
Low Level Input Voltage	V_{IL}		—	—	0.3 x V_{DD}	V
High Level Output Voltage	V_{OH}	I_O = 4 mA	V_{DD} – 0.6	—	—	V
Low Level Output Voltage	V_{OL}	SDO, $\overline{INT}$, SDITHRU I_O = –4 mA	—	—	0.4	V
		BATSELa/b, GPOa/b: I_O = –40 mA	—	—	0.72	V
SDITHRU Internal Pullup Resistance			35	50	—	kΩ
GPO Relay Driver Source Impedance	R_{OUT}	V_{DD1}–V_{DD4} = 3.13 V, I_O < 28 mA	—	63	—	Ω
GPO Relay Driver Sink Impedance	R_{IN}	V_{DD1}–V_{DD4} = 3.13 V, I_O < 85 mA	—	11	—	Ω
Input Leakage Current	I_L		—	—	±10	µA

Note: All timing (except Rise and Fall time) is referenced to the 50% level of the waveform. Input test levels are V_{IH} = V_{DD} – 0.4 V, V_{IL} = 0.4 V. Rise and Fall times are referenced to the 20% and 80% levels of the waveform.

Table 9. Switching Characteristics—General Inputs

(V_{DD}, V_{DD1}–V_{DD4} = 3.13 to 3.47 V, T_A = 0 to 70 °C for K-Grade, –40 to 85 °C for B-Grade, C_L = 20 pF)

Parameter	Symbol	Min	Typ	Max	Unit
Rise Time, $\overline{RESET}$	t_r	—	—	5	ns
$\overline{RESET}$ Pulse Width*	t_{rl}	500	—	—	ns
$\overline{RESET}$ Pulse Width*, SDI Daisy Chain Mode	t_{rl}	6	—	—	µs

***Note:** The minimum RESET pulse width assumes the SDITHRU pin is tied to ground via a pulldown resistor no greater than 10 kΩ per device.

Table 10. Switching Characteristics—SPI

(V_{DD}, V_{DD1}–V_{DD4} = 3.13 to 3.47 V, T_A = 0 to 70 °C for K-Grade, –40 to 85 °C for B-Grade, C_L = 20 pF)

Parameter	Symbol	Test Conditions	Min	Typ	Max	Unit
Cycle Time SCLK	t_c		0.062	—	—	µs
Rise Time, SCLK	t_r		—	—	25	ns
Fall Time, SCLK	t_f		—	—	25	ns
Delay Time, SCLK Fall to SDO Transition	t_{d2}		—	—	20	ns
Delay Time, $\overline{CS}$ Rise to SDO Tristate	t_{d3}		—	—	20	ns
Setup Time, $\overline{CS}$ to SCLK Rise	t_{su1}		15	—	—	ns
Hold Time, SCLK Rise to $\overline{CS}$ Rise	t_{h1}		20	—	—	ns
Setup Time, SDI to SCLK Rise	t_{su2}		25	—	—	ns
Hold Time, SCLK Rise to SDI Rise	t_{h2}		20	—	—	ns
SDI to SDITHRU Propagation Delay			—	6	—	ns
Note: All timing is referenced to the 50% level of the waveform. Input test levels are V_{IH} – V_{DD} –0.4 V, V_{IL} = 0.4 V						

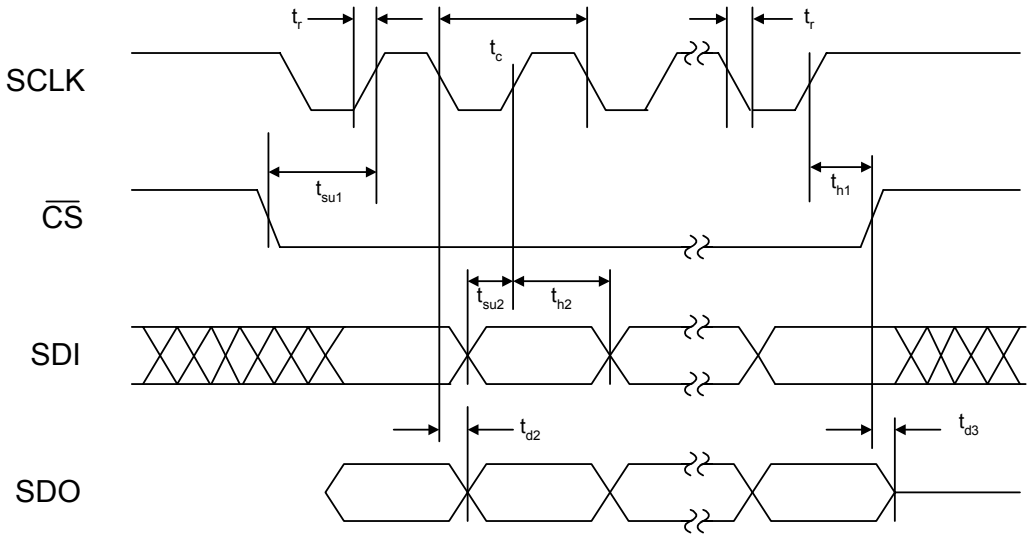

Figure 1. SPI Timing Diagram

Table 11. Switching Characteristics—PCLK and FSYNC Timing

(V_{DD}, V_{DD1}–V_{DD4} = 3.13 to 3.47 V, T_A = 0 to 70 °C for K-Grade, –40 to 85 °C for B-Grade, C_L = 20 pF)

Parameter	Symbol	Test Conditions	Min [1]	Typ [1]	Max [1]	Units
PCLK Period	t_p		122	—	3706	ns
Valid PCLK Inputs			— — — — — — — — —	256 512 768 1.024 1.536 1.544 2.048 4.096 8.192	— — — — — — — — —	kHz kHz kHz MHz MHz MHz MHz MHz MHz
FSYNC Period[2]	t_{fs}		—	125	—	µs
PCLK Duty Cycle Tolerance	t_{dty}		40	50	60	%
PCLK Period Jitter Tolerance	t_{jitter}		—	—	±120	ns
Rise Time, PCLK	t_r		—	—	25	ns
Fall Time, PCLK	t_f		—	—	25	ns
Setup Time, FSYNC to PCLK Fall	t_{su1}		25	—	—	ns
Hold Time, FSYNC to PCLK Fall	t_{h1}		20	—	—	ns
FSYNC Pulse Width	t_{wfs}		$t_p/2$	—	125 µs–t_p	ns

Notes:
1. All timing is referenced to the 50% level of the waveform. Input test levels are V_{IH} – $V_{I/O}$ –0.4 V, V_{IL} = 0.4 V.
2. FSYNC source is assumed to be 8 kHz under all operating conditions.

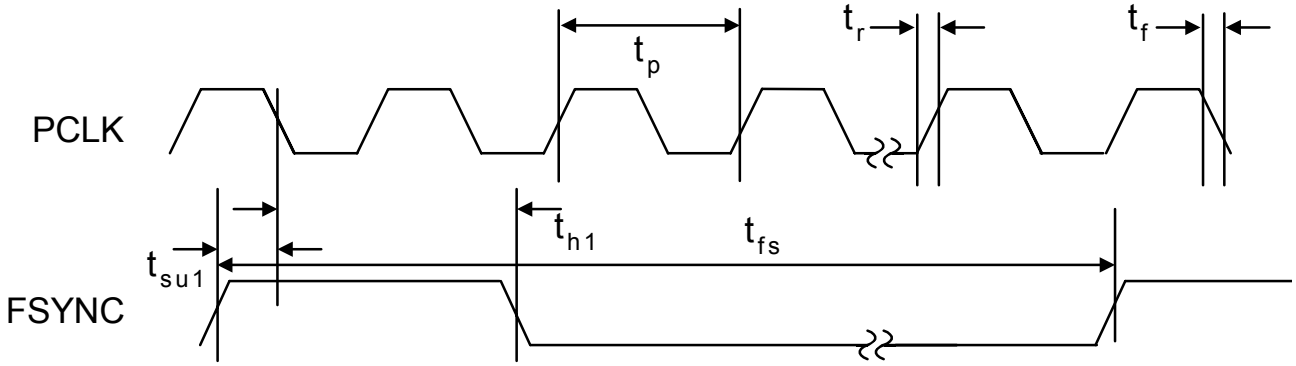

Figure 2. PCLK, FSYNC Timing Diagram

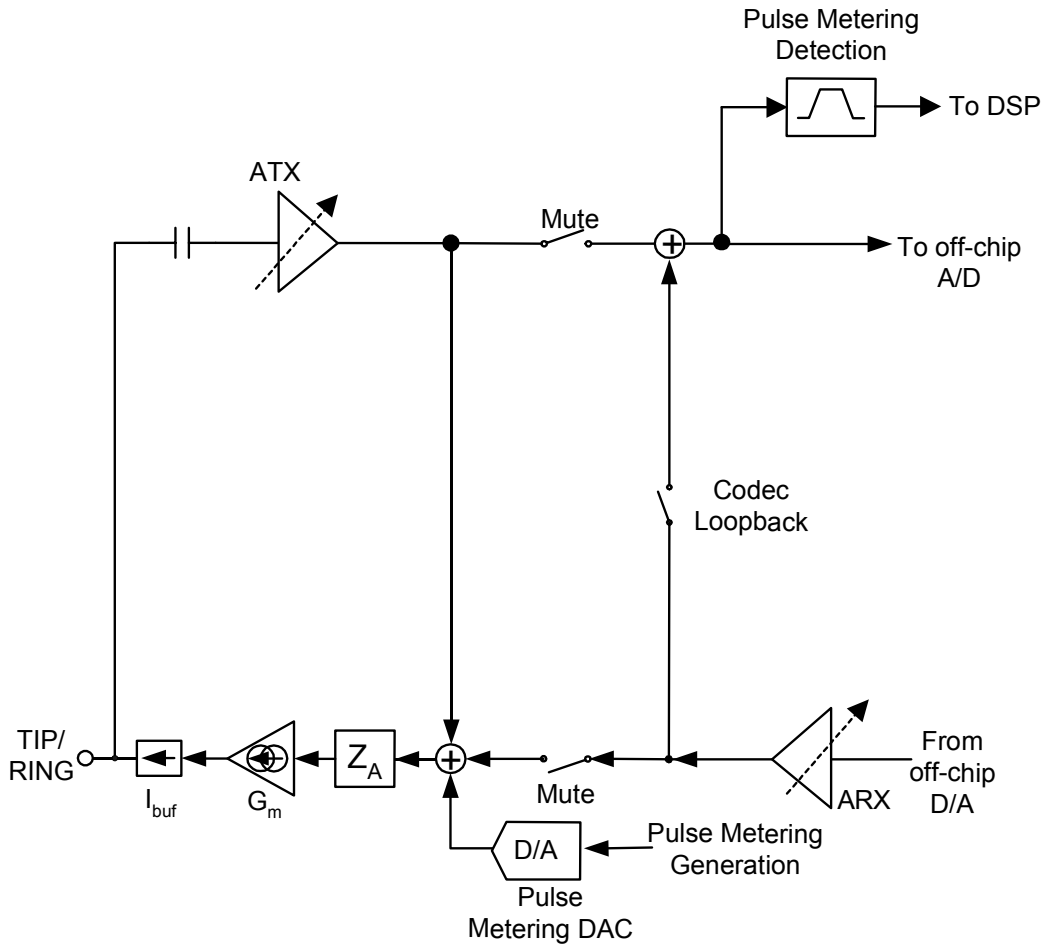

Figure 3. Si3232 Simplified Audio Path Block Diagram

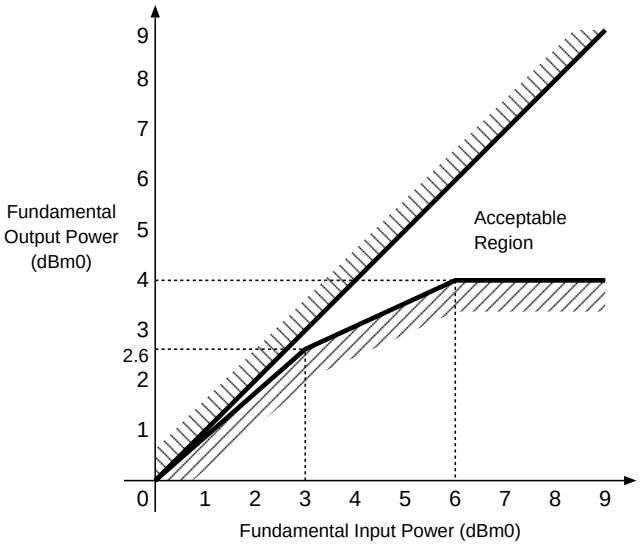

Figure 4. Overload Compression Performance

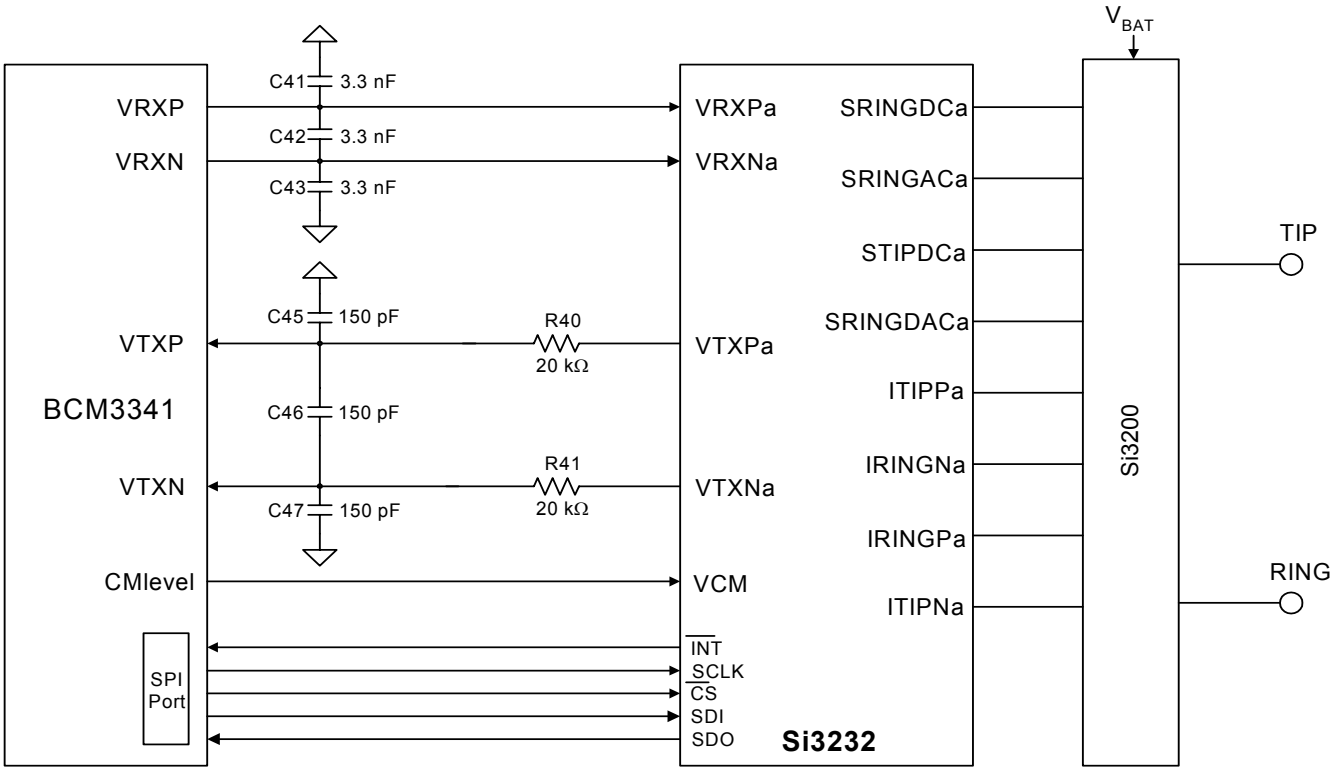

Figure 5. Typical Connection Diagram between Si3232 and Broadcom® BCM3341 (One SLIC channel shown: Channel "a")

2. Typical Application Schematic

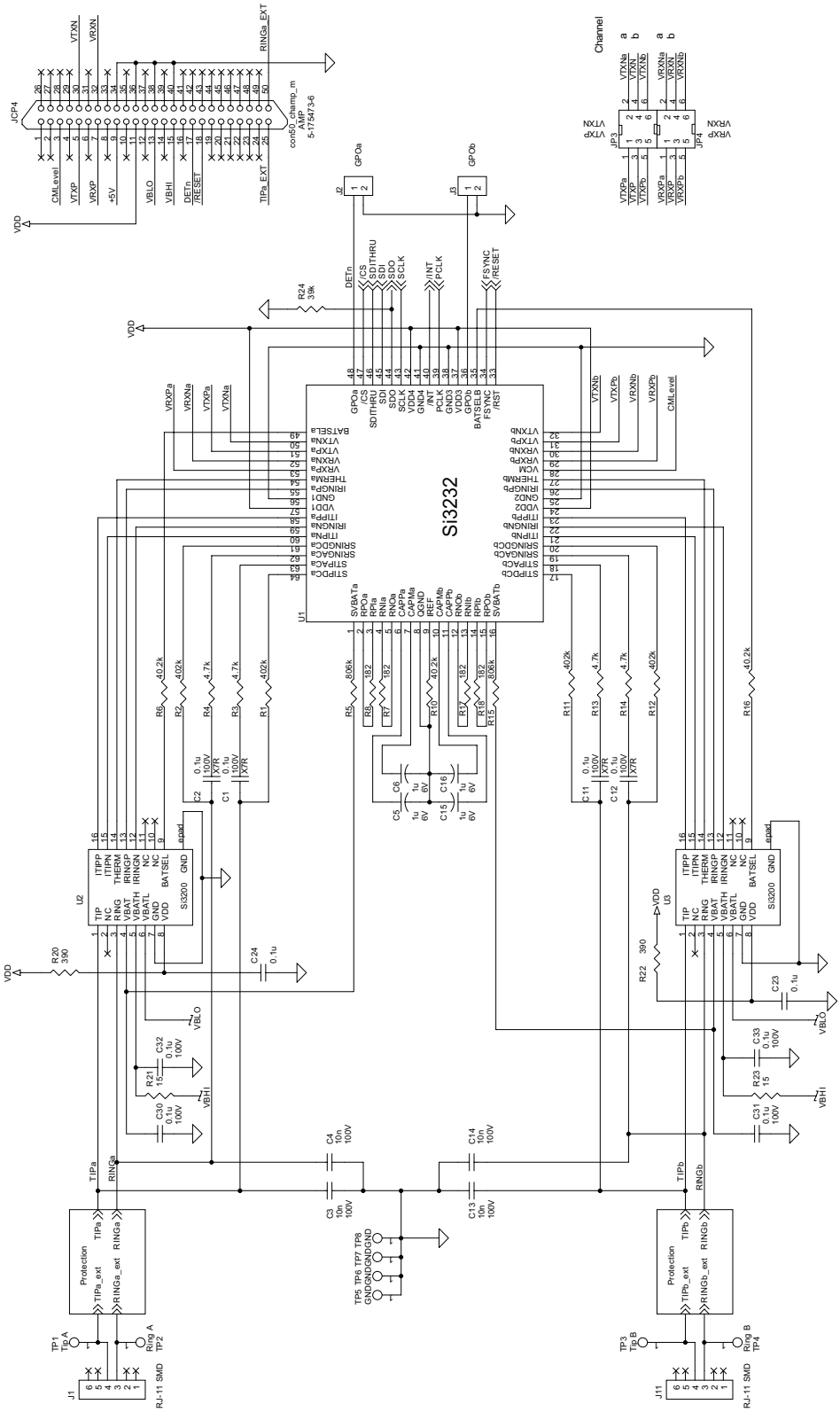

3. Bill of Materials

Component	Value	Function
C1, C2, C11, C12	100 nF, 100 V, X7R, ±20%	Filter capacitors for TIP, RING ac-sensing inputs.
C3, C4, C13, C14	10 nF, 100 V, X7R, ±20%	TIP/RING compensation capacitors.
C5, C6, C15, C16	1 µF, 10 V, X7R, ±20%	Low-pass filter capacitor to stabilize differential and common mode SLIC feedback loops.
C20–C25	0.1 µF, 10 V, Y5V	Decoupling for analog and digital chip supply pins.
C30–C33	0.1 µF, 100 V, Y5V	Decoupling for battery voltage supply pins.
C41–43*	3.3 nF, 10 V, X7R, ±20%	Reconstruction filter for DAC of BCM3341.
C45–47*	150 nF, 10 V, X7R, ±20%	Anti-aliasing filter for ADC of BCM3341.
R1, R2, R11, R12	402 kΩ, 1/10 W, ±1%	Sense resistors for TIP, RING dc sensing nodes.
R3, R4, R13, R14	4.7 kΩ, 1/10 W, ±5%	Current limiting resistors for TIP, RING ac-sensing inputs.
R5, R15	806 kΩ, 1/10 W, ±1%	Sense resistor for battery voltage sensing node.
R6, R16	40.2 kΩ, 1/10 W, ±5%	Sets bias current for battery switching logic circuit.
R7, R8, R17, R18	182 Ω, 1/10 W, ±1%	Reference resistors for internal transconductance amplifier.
R10	40.2 kΩ, 1/10 W, ±1%	Generates a high accuracy reference current.
R40, R41*	20 kΩ, 1/10 W, ±1%	Anti-aliasing filter for ADC of BCM3341.
***Note:** These components are only required when used with BCM3341 and other interface-compatible Broadcom products.		

4. Functional Description

The Si3232 dual SLIC is a low-voltage CMOS device that provides a fully-programmable SLIC with line monitoring and test functions to create a dual-channel analog telephone interface. Intended for multiple channel applications, the Si3232 provides high integration and low-power operation for applications, such as integrated access devices (IADs), voice-over DSL systems, cable telephony systems, and voice-over IP systems. These devices meet all relevant Bellcore LSSGR, ITU, and ETSI standards.

The Si3232 performs the battery, overvoltage, ringing, supervision, hybrid, and test functions on-chip in a low-power, small-footprint solution. All high-voltage functions are implemented using the Si3200 linefeed interface IC allowing a highly-integrated solution that offers the lowest total system cost.

The internal linefeed circuitry provides programmable on-hook voltage and off-hook loop current, reverse battery operation, loop or ground start operation, and on-hook transmission. Loop current and voltage are continuously monitored using an integrated 8-bit monitor A/D converter. The Si3232 provides on-chip, balanced, 5 REN ringing with or without a programmable dc offset eliminating the need for an external bulk ring generator and per-channel ringing relay typically used in unbalanced ringing applications. Both sinusoidal and trapezoidal ringing waveshapes are available. Ringing parameters, such as frequency, waveshape, cadence, and offset, can be programmed into registers to reduce external controller requirements. All ringing options are software-programmable over a wide range of parameters to address a wide variety of application requirements.

The Si3232 also provides a variety of line monitoring and subscriber loop testing. It has the ability to continuously monitor and store all line voltage and current parameters for fault detection, and all values are available in registers for later use. In addition, the Si3232 provides line card and subscriber loop diagnostic functions to eliminate the need for system-level test equipment. These test and diagnostic functions are intended to comply with relevant LSSGR and ITU requirements for line-fault detection and reporting, and all measured values are stored in registers for later use or further calculations.

The Si3232 is software-programmable allowing a single hardware design to meet international requirements. Programmability is supported using a standard 4-wire serial peripheral interface (SPI). The Si3232 is available in a 64-lead thin quad flat package (TQFP), and the Si3200 is available in a thermally-enhanced 16-lead SOIC.

4.1. Linefeed Architecture

The Si3232 is a low-voltage CMOS device that uses a low-cost integrated linefeed interface IC to control the high voltages required for subscriber line interfaces. Figure 6 is a simplified single-ended model of the linefeed control loop circuit for both the TIP and RING leads.

The Si3232 uses both voltage and current sensing to control TIP and RING. DC line voltages on TIP and RING are measured through sense resistors R_{DC}. AC line voltages on TIP and RING are measured through sense resistors R_{AC}. The Si3232 uses the Si3200 linefeed interface to drive TIP and RING.

The Si3232 measures voltage at various nodes to monitor the linefeed current. R_{DC} and R_{BAT} provide access to these measuring points. The sense circuitry is calibrated on-chip to guarantee measurement accuracy. See "4.4. Linefeed Calibration" on page 25 for details on linefeed calibration.

4.2. Power Supply Transients on the Si3200

The Si3200 features an ESD clamp protection circuit connected between the V_{DD} and VBATH rails. This clamp protects the Si3200 against ESD damage when the device is being handled out-of-circuit during manufacture. Precautions must be taken in the V_{DD} and VBATH system power supply design. At power-up, the V_{DD} and VBATH rails must ramp-up from 0 V to their respective target values in a linear fashion and must not exhibit fast transients or oscillations which could cause the ESD clamp to be activated for an extended period of time resulting in damage to the Si3200. The resistors shown as R20 through R23 together with capacitors C23, C24, C30 and C31 in the Application Schematic (Figure on page 17) provide some measure of protection against in-circuit ESD clamp activation by forming a filter time constant and by providing current limitting action in case of momentary clamp activation during power-up. These resistors and capacitors must be included in the application circuit, while ensuring that the V_{DD} and VBATH system power supplies are designed to exhibit start-up behavior that is free of undesirable transients or oscillations. Once the V_{DD} and VBATH are in their steady state final values, the ESD clamp has circuitry that prevents it from being activated by transients slower than 10 V/us. In the steady powered-up state, the V_{DD} and VBATH rails must therefore not exhibit transients resulting in a voltage slew rate greater than 10 V/µs.

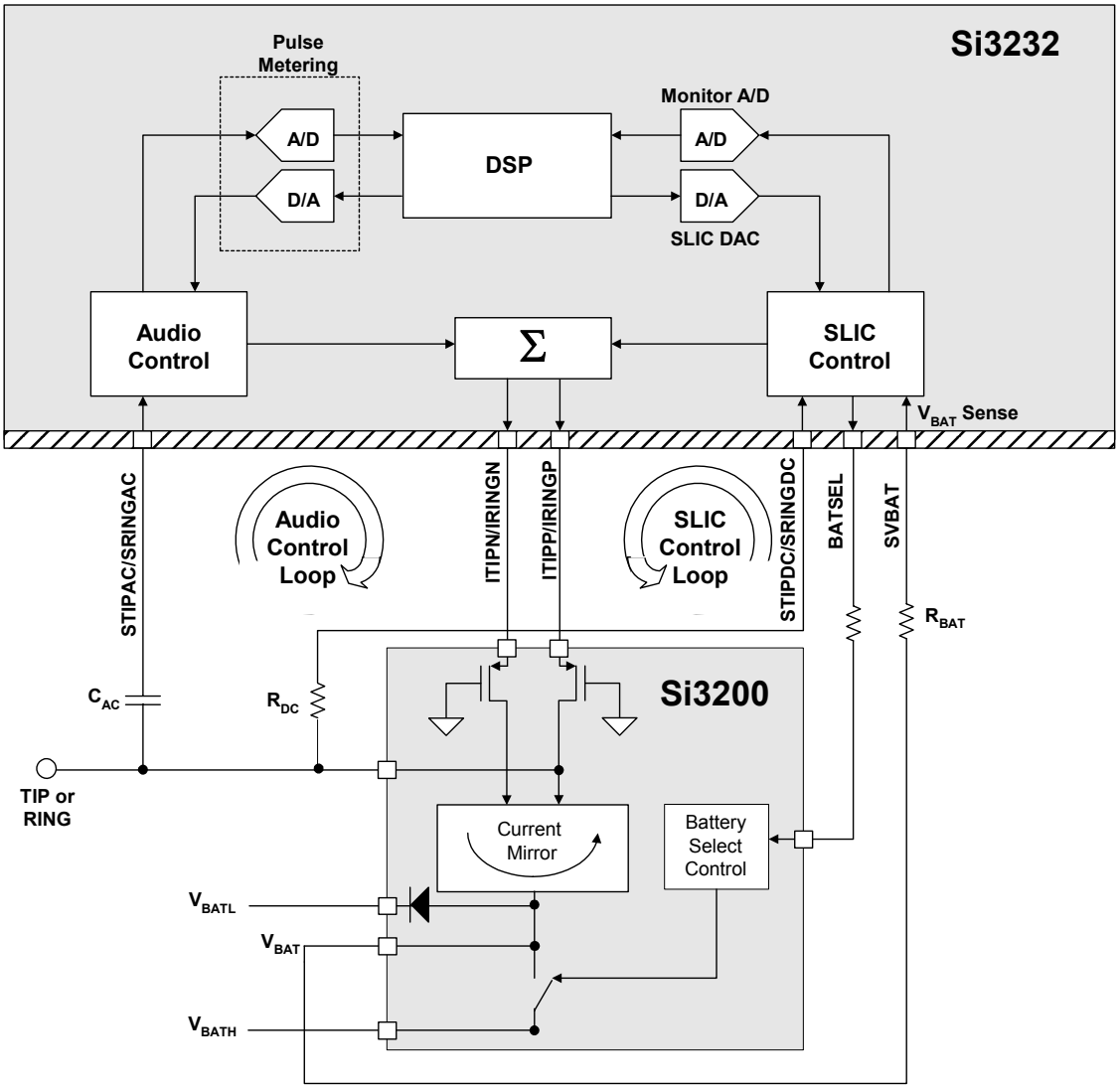

Figure 6. Simplified Linefeed Architecture for TIP and RING Leads (Diagram illustrates either TIP or RING lead of a single channel)

4.3. DC Feed Characteristics

The Si3232 offers programmable constant voltage and constant current operating regions as illustrated in Figure 7 and Figure 8. The constant voltage region is defined by the open-circuit voltage, V_{OC}, and is programmable from 0 to 63.3 V in 1 V steps. The constant current region is defined by the loop current limit, I_{LIM}, and is programmable from 18 to 45 mA in 0.87 mA steps. The Si3232 exhibits a characteristic dc impedance of 320 Ω during Active mode.

The TIP-RING voltage, V_{OC}, is offset from ground by a programmable voltage, V_{CM}, to provide sufficient voltage headroom to the most positive terminal (typically the TIP lead in normal polarity or the RING lead in reverse polarity) for carrying audio signals. A similar programmable voltage, V_{OV}, is provided as an offset between the most negative terminal and the battery supply rail for carrying audio signals. (See Figure 7.) The user-supplied battery voltage must have sufficient amplitude under all operating states to ensure sufficient headroom. The Si3200 may be powered by a lower secondary battery supply, V_{BATL}, to reduce total power dissipation when driving short loop lengths.

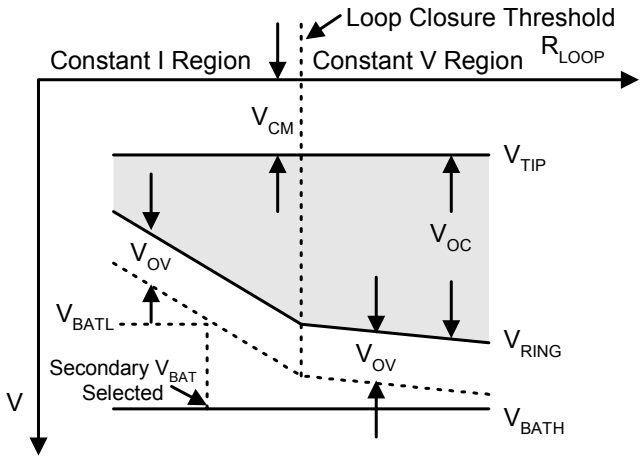

Figure 7. DC Linefeed Overhead Voltages (Forward State)

4.3.1. Calculating Overhead Voltages

The two programmable overhead voltages, V_{OV} and V_{CM}, represent one portion of the total voltage between V_{BAT} and ground as illustrated in Figure 7. In normal operating conditions, these overhead voltages are sufficiently low to maintain the desired TIP-RING voltage, V_{OC}. There are, however, certain conditions under which the user must exercise care in providing a battery supply with enough amplitude to supply the required TIP-RING voltage as well as enough margin to accommodate these overhead voltages. The V_{CM} voltage is programmed for a given operating condition. Therefore, the open-circuit voltage, V_{OC}, varies according to the required overhead voltage, V_{OV}, and the supplied battery voltage, V_{BAT}. The user should pay special attention to the maximum V_{OV} and V_{CM} that might be required for each operating state.

In the off-hook active state, sufficient V_{OC} must be maintained to correctly power the phone from the battery supply that has been provided. Since the battery supply depends on the state of the input supply (i.e., charging, discharging, or battery backup mode), the user must decide how much loop current is required and determine the maximum loop impedance that can be driven based on the battery supply provided.

The minimum battery supply required can be calculated according to the following equation.

$$V_{BAT} \geq V_{OC} + V_{CM} + V_{OV}$$

V_{CM} and V_{OV} are provided in Table 8.

The default V_{CM} value of 3 V provides sufficient overhead for a 3.1 dBm signal into a 600 Ω loop impedance.

A V_{OV} value of 4 V provides sufficient headroom to source a maximum I_{LOOP} of 45 mA along with a 3.1 dBm audio signal and an ABIAS setting of 16 mA. For a typical operating condition, V_{BAT} = –56 V and I_{LIM} = 22 mA:

$V_{OC,MAX}$ = 56 V – (3 V + 4 V) = 49 V

These conditions apply when the dc-sensing inputs, STIPDCa/b and SRINGDCa/b, are placed on the SLIC side of any protection resistance placed in series with the TIP and RING leads. If line-side sensing is desired, both V_{OV} and V_{CM} must be increased by a voltage equal to R_{PROT} x I_{LIM} where R_{PROT} is the value of each protection resistor. Other safety precautions may apply.

See "4.7.3. Linefeed Overhead Voltage Considerations During Ringing" on page 40 for details on calculating the overhead voltage during the ringing state.

The Si3232 uses both voltage and current information to control TIP and RING. Sense resistor R_{DC} (see Figure 6) measures dc line voltages on TIP and RING; capacitor C_{AC} couples the ac line voltages on the TIP and RING leads to be measured. The Si3232 uses the Si3200 linefeed interface IC to drive TIP and RING and to isolate the high-voltage line from the low-voltage Si3232.

The Si3232 measures voltage at various nodes to monitor the linefeed current. R_{DC} and R_{BAT} provide these measuring points. The sense circuitry is calibrated on-chip to ensure measurement accuracy. See "4.4. Linefeed Calibration" on page 25 for details.

4.3.2. Linefeed Operation States

The linefeed interface includes eight different operating states as described in Table 12. The Linefeed register settings (LF[2:0], Linefeed Register) are also listed. The Open state is the default condition in the absence of any pre-loaded register settings. The device may also automatically enter the Open state if any excess power consumption is detected in the Si3200. See "4.4.3. Power Monitoring and Power Fault Detection" on page 26 for more details.

The register and RAM locations used for programming the linefeed parameters are provided in Table 13. Also see “4.4.2. Loop Voltage and Current Monitoring” and "4.4.3. Power Monitoring and Power Fault Detection" on page 26 for more detailed descriptions and register/ RAM locations for these specific functions.

Table 12. Linefeed States

Open (LF[2:0] = 000). The Si3200 output is high-impedance. This mode can be used in the presence of line fault conditions and to generate Open Switch Intervals (OSIs). The device can also automatically enter the Open state if any excess power consumption is detected in the Si3200.
Forward Active (LF[2:0] = 001). Linefeed is active, but audio paths are powered down until an off-hook condition is detected. The Si3232 will automatically enter a low-power state to reduce power consumption during on-hook standby periods.
Forward On-Hook Transmission (LF[2:0] = 010). Provides data transmission during an on-hook loop condition (e.g., transmitting FSK caller ID information between ringing bursts).
Tip Open (LF[2:0] = 011). Sets the portion of the linefeed interface connected to the TIP side of the subscriber loop to high impedance and provides an active linefeed on the RING side of the loop for ground start operation.
Ringing (LF[2:0] = 100). Drives programmable ringing waveforms onto the subscriber loop.
Reverse Active (LF[2:0] = 101). Linefeed circuitry is active, but audio paths are powered down until an off-hook condition is detected. The Si3232 will automatically enter a low-power state to reduce power consumption during on-hook standby periods.
Reverse On-Hook Transmission (LF[2:0] = 110). Provide data transmission during an on-hook loop condition.
Ring Open (LF[2:0] = 111). Sets the portion of the linefeed interface connected to the RING side of the subscriber loop to high impedance and provides an active linefeed on the TIP side of the loop for ground start operation.

Table 13. Register and RAM Locations used for Linefeed Control

Parameter	Register / RAM Mnemonic	Register/RAM Bits	Programmable Range	LSB Size	Effective Resolution
Linefeed	LINEFEED	LF[2:0]	See Table 12	N/A	N/A
Linefeed Shadow	LINEFEED	LFS[2:0]	Monitor only	N/A	N/A
Battery Feed Control	RLYCON	BATSEL	VBATH/VBATL	N/A	N/A
Loop Current Limit	ILIM	ILIM[4:0]	18–45 mA	0.875 mV	0.875 mA
On-Hook Line Voltage	VOC	VOC[14:0]	0 to 63.3 V	4.907 mV	1.005 V
Common Mode Voltage	VCM	VCM[14:0]	0 to 63.3 V	4.907 mV	1.005 V
V_{OC} Delta for Off-Hook	VOCDELTA	VOCDELTA[14:0]	0 to 63.3 V	4.907 mV	1.005 V
V_{OC} Delta Threshold, Low	VOCLTH	VOCTHD[15:0]	0 to 63.3 V	4.907 mV	1.005 V
V_{OC} Delta Threshold, High	VOCHTH	VOCTHD[15:0]	0 to 63.3 V	4.907 mV	1.005 V
Overhead Voltage	VOV	VOV[14:0]	0 to 63.3 V	4.907 mV	1.005 V
Ringing Overhead Voltage	VOVRING	VOVRING[14:0]	0 to 63.3 V	4.907 mV	1.005 V
V_{OC} During Battery Tracking	VOCTRACK	VOCTRACK[15:0]	0 to 63.3 V	4.907 mV	1.005 V

The dc linefeed circuitry generates the necessary TIP/RING I/V characteristics along with loop closure and ring trip detection. For loop start applications, V_{TIP}–V_{RING} is programmable. The loop current limit, I_{LIM}, is software-programmable with a range from 18–45 mA.

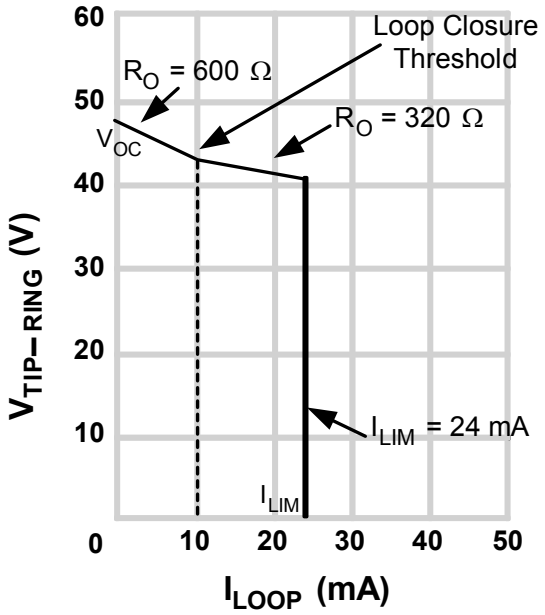

Figure 8. $V_{TIP–RING}$ vs. I_{LOOP} Characteristic for Loop Start Operation

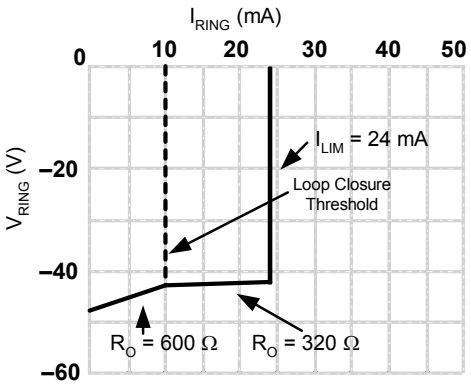

Figure 9. V_{RING} vs. I_{RING} Characteristic for Ground Start Operation

Figure 8 illustrates the linefeed characteristics for a typical application using an I_{LOOP} setting of 24 mA and a TIP-RING open circuit voltage (V_{OC}) of 48 V. The VOC and VOCTRACK RAM locations are used to program the TIP-RING voltage, and these two values are equal provided that $V_{BAT} > V_{OC} + V_{OV} + V_{CM}$. When the battery voltage drops below that point, VOCTRACK decreases at the same rate as V_{BAT} in order to provide sufficient headroom to accommodate both V_{OV} and V_{CM} levels below V_{BAT}.

The equation for calculating the RAM address value for VOC, VCM, VOCDELTA, VOV, VOVRING, RINGOF, VOCLTH, and V_{OCHTH} is shown below. The CEILING function rounds up the result to the next integer.

$$\text{RAM VALUE} =$$

$$2 \times \text{CEILING}\left(\text{ROUND}\left(\frac{\text{desired voltage}}{1.005\text{V}}\right) \times \frac{512}{5}\right)$$

For example, to program a VOC value of 51 V:

$$\text{VOC} = 2 \times \text{CEILING}\left(\text{ROUND}\left(\frac{51\text{ V}}{1.005\text{ V}}\right) \times \frac{512}{5}\right) = 28\text{CEh}$$

During the on-hook state, the Si3232 is in the constant-voltage operating area and typically presents a 640 Ω output impedance (Figure 8). The Si3232 includes a special modified linefeed scheme that adjusts the ProSLIC's output impedance based on the linefeed voltage level in order to ensure the ability to source extended loop lengths. When the terminal equipment transitions to the off-hook state, the linefeed voltage typically collapses and transitions through the preset threshold voltage causing the Si3232 to reduce its output impedance to 320 Ω. The TIP-RING voltage will then continue decreasing until the preset loop current limit (I_{LIM}) setting is reached. Loop closure and ring trip detection thresholds are programmable, and internal debouncing is provided. A high-gain common-mode loop generates a low impedance from TIP or RING to ground, effectively reducing the effects of longitudinal interference.

For ground-start operation, the active lead presents a 640 Ω output impedance during the on-hook state and a 320 Ω output impedance in the off-hook state. The "open" lead presents a high-impedance feed (>150 kΩ). Figure 9 illustrates a typical ground-start application using V_{OC} = 48 V and I_{LIM} = 24 mA in the TIP OPEN state. The ring ground-detection threshold and debouncing interval are both programmable.

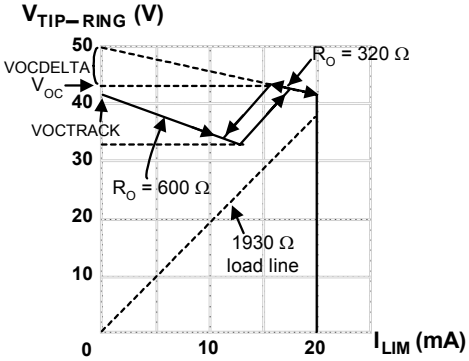

Figure 10. $V_{TIP-RING}$ vs. I_{LOOP} Characteristics using Modified Linefeed Scheme

The modified linefeed scheme also allows the user to modify the apparent V_{OC} voltage as a means of boosting the linefeed voltage when the battery voltage drops below a certain level. Figure 10 illustrates a typical Si3232 application sourcing a loop from a 48 V battery. For V_{OV} and V_{CM} values of 3 V, the VOCTRACK RAM location will be set to 42 V when given a programmed value of 42 V for the VOC RAM location. When a loop closure event occurs, the TIP-RING voltage decreases linearly until it reaches a preset voltage threshold that is lower than VOCTRACK by an amount programmed into the VOCLTH RAM location. Exceeding this threshold causes the Dual ProSLIC to increase its "target" V_{OC} level by an amount programmed into the VOCDELTA RAM location to provide additional overhead for driving the higher-impedance loop. In the on-hook condition, the TIP-RING voltage increases linearly until it rises above a second preprogrammed voltage threshold, which is higher than VOCTRACK by an amount programmed into the VOCHTH RAM location. This scheme offers the ability to drive very long loop lengths while using the lowest possible battery voltage. Consult the factory for optimal register and RAM location settings for specific applications.

Table 14. Register and RAM Locations used for Loop Monitoring

Parameter	Register/RAM Mnemonic	Register/ RAM Bits	Measurement Range	LSB Size	Effective Resolution
Loop Voltage Sense ($V_{TIP} – V_{RING}$)	VLOOP	VLOOP[15:0]	0 to 64.07 V 64.07 to 160.173 V	4.907 mV	251 mV 628 mV
TIP Voltage Sense	VTIP	VTIP[15:0]	0 to 64.07 V 64.07 V to 160.173 V	4.907 mV	251 mV 628 mV
RING Voltage Sense	VRING	VRING[15:0]	0 to 64.07 V 64.07 V to 160.173 mA	4.907 mV	251 mV 628 mV
Loop Current Sense	ILOOP	ILOOP[15:0]	0 to 101.09 mA	3.907 μA	500 μA*
Longitudinal Current Sense	ILONG	ILONG[15:0]	0 to 101.09 mA	3.907 μA	500 μA*
Battery Voltage Sense	VBAT	VBAT[15:0]	0 to 64.07 V 64.07 to 160.173 V	4.907 mV	251 mV 628 mV
***Note:** I_{LOOP} and I_{LONG} are calculated values based on measured I_{Q1}–I_{Q4} currents. The resulting effective resolution is approximately 500 μA.					

4.4. Linefeed Calibration

An internal calibration algorithm corrects for internal and external component errors. The calibration is initiated by setting the CAL register bit. Upon completion of the calibration cycle, this bit is automatically reset.

It is recommended that a calibration be executed following system powerup. Upon release of the chip reset, the device is in the Open state, and calibration can be initiated. Only one calibration should be necessary as long as the system remains powered up.

The Dual ProSLIC calibration sequence consists of SLIC mode calibration, monitor ADC calibration, and audio path calibration. The calibration bits that are set in registers CALR1 and CALR2 are executed in order of MSB to LSB for each sequential register. CALR1, bit 7 starts the calibration sequence. CALR2 calibration bits should be set before the CALR1 is written. The reserved bit (bit 6) of CALR1 must always be cleared to 0. The interrupt bit, bit 7 of IRQ3, will report an error in the calibration process. The error could include the line becoming off-hook during the common mode balance calibration.

During all calibrations, the calibration engine controls VTIP and VRING to provide the correct external voltage conditions for the calibration algorithm. The TIP and RING leads must not be connected to ground during any calibration.

The leakage calibrations (CALR1, bits 4–5) can be done at regular intervals to provide optimal performance over temperature variations. The TIP/RING leakage calibrations can be performed every hour. Invoke these leakage calibrations, only during on-hook, by setting CALR1 to 0xB0. The leakage calibration takes 5 ms and interferes with dc feed and voice transmission during its process.

4.4.1. Common Mode Calibration

To optimize common mode (longitudinal) balance performance, it is recommended that the user perform the following steps when running the common-mode calibration routine:

1. Write the Register values as shown in Table 15. These coefficient values select a 600 Ω impedance synthesis
2. Set Common Mode Balance Interrupt (IRQEN3 = 0x80)
3. Set CALR2 = 0x01. This enables only the AC longitudinal balance calibration routine (CALCMBAL)
4. Set CALR2 = 0x80. This begins the calibration process.
5. Wait for the CALR1 register to clear to 0x0, indicating the longitudinal balance calibration is complete (up to 100ms).
6. Ensure that a common mode balance error interrupt did not occur. Retry calibration if true.
7. Rewrite desired register values that were changed during this calibration.

During all calibrations, the calibration engine controls VTIP and VRING to provide the correct external voltage conditions for the calibration algorithm. The TIP and RING leads must not be connected to ground during any calibration. Note that the channel being calibrated must be on-hook.

Table 15. Register Values for CM Calibration (600 Ω Impedance Synthesis)

Register Name	Register Location (decimal)	Register Value (hexadecimal)
ZRS	33	0x5
ZZ	34	0x1

4.4.2. Loop Voltage and Current Monitoring

The Si3232 continuously monitors the TIP and RING voltages and currents. These values are available to the user in registers. An internal 8-bit A/D converter samples the measured voltages and currents from the analog sense circuitry and translates them into the digital domain. The A/D updates the samples at an 800 Hz rate. Two derived values, the loop voltage ($V_{TIP} - V_{RING}$) and the loop current are also reported. For ground start operation, the values reported are V_{RING} and the current flowing in the RING lead. Table 14 lists the register set associated with the loop monitoring functions.

The Si3232 also includes the ability to perform loop diagnostics functions as outlined in "4.18.2. Line Test and Diagnostics" on page 57.

4.4.3. Power Monitoring and Power Fault Detection

The Si3232 line monitoring functions can be used to protect the high-voltage circuitry against excessive power dissipation and thermal-overload conditions. The Si3232 also has the ability to prevent thermal overloads by regulating the total power inside the Si3200 or in each of the external bipolar transistors (if using a discrete linefeed circuit). The DSP engine performs all power calculations and provides the ability to automatically transition the device into the OPEN state and generate a power alarm interrupt when excessive power is detected. Table 16 describes the register and RAM locations used for power monitoring.

4.4.4. Transistor Power Equations (Using Discrete Transistors)

When using the Si3232 along with discrete bipolar transistors, it is possible to control the total power of the solution by regulating the power in each discrete transistor individually. Figure 11 illustrates the basic transistor-based linefeed circuit for one channel. The power dissipation of each external transistor is estimated based on the A/D sample values. The approximate power equations for each external BJT are as follows:

$P_{Q1} \cong V_{CE1} \times I_{Q1} \cong (|V_{TIP}| + 0.75\ V) \times (I_{Q1})$

$P_{Q2} \cong V_{CE2} \times I_{Q2} \cong (|V_{RING}| + 0.75\ V) \times (I_{Q2})$

$P_{Q3} \cong V_{CE3} \times I_{Q3} \cong (|V_{BAT}| - R7 \times I_{Q5}) \times (I_{Q3})$

$P_{Q4} \cong V_{CE4} \times I_{Q4} \cong (|V_{BAT}| - R6 \times I_{Q6}) \times (I_{Q4})$

$P_{Q5} \cong V_{CE5} \times I_{Q5} \cong (|V_{BAT}| - |V_{RING}| - R7 \times I_{Q5}) \times (I_{Q5})$

$P_{Q6} \cong V_{CE6} \times I_{Q6} \cong (|V_{BAT}| - |V_{TIP}| - R6 \times I_{Q6}) \times (I_{Q6})$

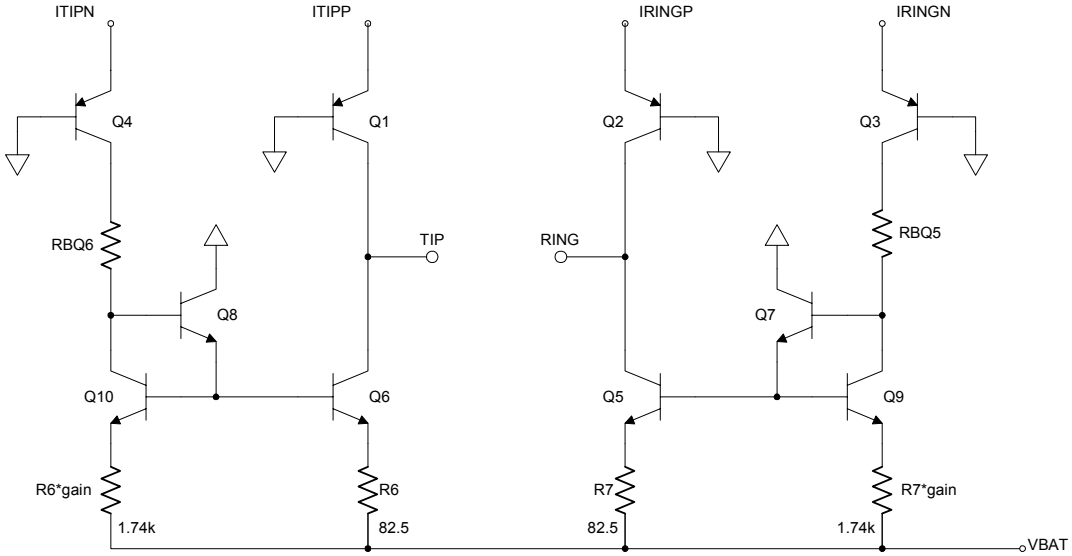

Figure 11. Discrete Linefeed Circuit for Power Monitoring

The maximum power threshold for each device is software-programmable and should be set based on the characteristics of the transistor package, PCB design, and available airflow. If the peak power exceeds the programmed threshold for any device, the power alarm bit is set for that device. Each external bipolar has its own register bit (PQ1S–PQ6S bits of the IRQVEC3 register) which goes high on a rising edge of the comparator output and remains high until the user clears it. Each transistor power alarm bit is also maskable by setting the PQ1E–PQ6E bits in the IRQEN3 register.

4.4.5. Si3200 Power Calculation

When using the Si3200, it is also possible to detect the thermal conditions of the linefeed circuit by calculating the total power dissipated within the Si3200. This case is similar to the Transistor Power Equations case, with the exception that the total power from all transistor devices is dissipated within the same package enclosure and the total power result is placed in the PSUM RAM location. The power calculation is derived using the following set of equations:

$P_{Q1} \cong (|V_{TIP}| + 0.75\ V) \times I_{Q1}$

$P_{Q2} \cong (|V_{RING}| + 0.75\ V) \times I_{Q2}$

$P_{Q3} \cong (|V_{BAT}| + 0.75\ V) \times I_{Q3}$

$P_{Q4} \cong (|V_{BAT}| + 0.75\ V) \times I_{Q4}$

$P_{Q5} \cong (|V_{BAT}| - |V_{RING}|) \times I_{Q5}$

$P_{Q6} \cong (|V_{BAT}| - |V_{TIP}|) \times I_{Q6}$

PSUM = total dissipated power = $P_{Q1} + P_{Q2} + P_{Q3} + P_{Q4} + P_{Q5} + P_{Q6}$

Note: The Si3200 THERM pin must be connected to the THERM a/b pin of the Si3232 in order for the Si3200 power calculation to work correctly.

4.4.6. Power Filter and Alarms

The power calculated during each A/D sample period must be filtered before being compared to a user-programmable maximum-power threshold. A simple digital low-pass filter is used to approximate the transient thermal behavior of the package, with the output of the filter representing the effective peak power within the package or, equivalently, the peak junction temperature.

For Q1, Q2, Q3, Q4 in SOT23 and Q5, and Q6 in SOT223 packages, the settings for thermal low-pass filter poles and power threshold settings are (for an ambient temperature of 70 °C) calculated as follows: Suppose that the thermal time constant of the package is $\tau_{thermal}$. The decimal values of RAM locations PLPF12, PLPF34, and PLPF56 are given by rounding to the next integer the value given by the following equation:

$$\text{PLPFxx (decimal value)} = \frac{4096}{800 \times \tau_{thermal}} \times 2^3$$

where 4096 is the maximum value of the 12-bit plus sign RAM locations, PLPF12, PLPF34, and PLPF56, and 800 is the power calculation clock rate in Hz. The equation is an excellent approximation of the exact equation for $\tau_{thermal}$ = 1.25 ms … 5.12 s. With the above equations in mind, example values of the RAM locations, PTH12, PTH34, PTH56, PLPF12, PLPF34, and PLPF56 follow:

PTH12 = power threshold for Q1, Q2 = 0.3 W (0x25A)

PTH34 = power threshold for Q3, Q4 = 0.22 W (0x1BSE)

PTH56 = power threshold for Q5, Q6 = 1 W (0x7D8)

PLPF12 = Q1/Q2 Thermal LPF pole = 0x0012 (for SOT-89 package)

PLPF34 = Q3/Q4 Thermal LPF pole = 0x008C (for SOT-23 package)

PLPF56 = Q5/Q6 thermal LPF pole = 0x000E (for SOT-223 package)

When Si3200 is used, the thermal filtering needs to be performed on the total power reflected in the PSUM RAM location. When the filter output exceeds the total power threshold, an interrupt is issued. The PTH12 RAM location is used to preset the total power threshold for the Si3200, and the PLPF12 RAM location is used to preset the thermal low-pass filter pole.

When the THERM pin is connected from the Si3232 to the Si3200 (indicating the presence of an Si3200), the resolution of the PTH12 and PSUM RAM locations is modified from 498 μW/LSB to 1059.6 μW/LSB. Additionally, the $\tau_{THERMAL}$ value must be modified to accommodate the Si3200. $\tau_{THERMAL}$ for the Si3200 is typically 0.7 s assuming the exposed pad is connected to the recommended ground plane as stated in Table 1. $\tau_{THERMAL}$ decreases if the PCB layout does not provide sufficient thermal conduction. See “AN58: Si3220/Si3225 Programmer’s Guide” for details.

Example calculations for PTH12 and PLPF12 in Si3200 mode are shown below:

PTH12 = Si3200 power threshold = 1 W (0x3B0)

PLPF12 = Si3200 thermal LPF pole = 2 (0x0010)

4.4.7. Automatic State Change Based on Power Alarm

If any of the following situations occurs, the device automatically transitions to the OPEN state:

- Any of the transistor power alarm thresholds is exceeded (in the case of the discrete transistor circuit).

- The total power threshold is exceeded (when using the power calculator method along with the Si3200).

To provide optimal reliability, the device automatically transitions into the open state until the user changes the state manually, independent of whether or not the power alarm interrupt has been masked. The PQ1E to PQ6E bits of the IRQEN3 register are used to enable the interrupts for each transistor power alarm, and the PQ1S to PQ6S bits of the IRQVEC3 register are set when a power alarm is triggered in the respective transistor. When using the Si3200, the PQ1E bit is used to enable the power alarm interrupt, and the PQ1S bit is set when a Si3200 power alarm is triggered.

4.4.8. Power Dissipation Considerations

The Si3232 relies on the Si3200 to power the line from the battery supply. The PCB layout and enclosure conditions should be designed to allow sufficient thermal dissipation out of the Si3200, and a programmable power alarm threshold ensures product safety under all operating conditions. See “4.4.3. Power Monitoring and Power Fault Detection” for more details on power alarm considerations. The Si3200’s thermally-enhanced SOIC-16 package offers an exposed pad that improves thermal dissipation out of the package when soldered to a topside PCB pad connected to inner power planes. Using appropriate layout practices, the Si3200 can provide thermal performance of 55 °C/W. The exposed path should be connected to a low-impedance ground plane via a topside PCB pad directly under the part. See package outlines for PCB pad dimensions. In addition, an opposite-side PCB pad with multiple vias connecting it to the topside pad directly under the exposed pad further improves the overall thermal performance of the system. Refer to “AN55: Dual ProSLIC™ User Guide” or the Si3232 evaluation board data sheet for layout guidelines for optimal thermal dissipation.

Table 16. Register and RAM Locations used for Power Monitoring and Power Fault Detection

Parameter	Location	Register/RAM Bits	Measurement Range	Resolution
Si3200 Power Output Monitor	PSUM	PSUM[15:0]	0 to 34.72 W	1059.6 μW
Si3200 Power Alarm Interrupt Pending	IRQVEC3	PQ1S	N/A	N/A
Si3200 Power Alarm Interrupt Enable	IRQEN3	PQ1E	N/A	N/A
Q1/Q2 Power Alarm Threshold (discrete) Q1/Q2 Power Alarm Threshold (Si3200)	PTH12	PTH12[15:0]	0 to 16.319 W 0 to 34.72 W	498 μW 1059.6 μW
Q3/Q4 Power Alarm Threshold	PTH34	PTH34[15:0]	0 to 1.03 W	31.4 μW
Q5/Q6 Power Alarm Threshold	PTH56	PTH56[15:0]	0 to 16.319 W	498 μW
Q1/Q2 Thermal LPF Pole	PLPF12	PLPF12[15:3]	See “4.4.6. Power Filter and Alarms”	
Q3/Q4 Thermal LPF Pole	PLPF34	PLPF34[15:3]	See “4.4.6. Power Filter and Alarms”	
Q5/Q6 Thermal LPF Pole	PLPF56	PLPF56[15:3]	See “4.4.6. Power Filter and Alarms”	
Q1–Q6 Power Alarm Interrupt Pending	IRQVEC3		TBD	N/A
Q71–Q6 Power Alarm Interrupt Enable	IRQEN3		TBD	N/A

4.5. Automatic Dual Battery Switching

The Si3232 and Si3200 provide the ability to switch between several user-provided battery supplies to aid thermal management. This method is required during the ringing to off-hook and on-hook to off-hook state transitions.

During the on-hook operating state, the Si3232 must operate from the ringing battery supply in order to quickly provide the desired ringing signal when required. Once an off-hook condition has been detected, the Si3232 must transition to the lower battery supply (typically –24 V, in order to reduce power dissipation during the active state). The low current consumed by the Si3232 during the on-hook state results in very little power dissipation while being powered from the ringing battery supply, which can have an amplitude as high as 100 V depending on the desired ringing amplitude.

The BATSEL pins serve to switch between the two battery voltages based on the operating state and the TIP-RING voltage. Figure 12 illustrates the chip connections required to implement an automatic dual battery switching scheme. When BATSEL is pulled low, the desired channel is powered from the V_{BLO} supply. When BATSEL is pulled high, the V_{BHI} source will supply power to the desired channel.

The BATSEL pins for both channels are controlled using the BATSEL bit of the RLYCON register and should be programmed to automatically switch to the lower battery supply (V_{BLO}) whenever an off-hook condition is sensed.

Two thresholds are provided to enable battery switching with hysteresis. The BATHTH RAM location specifies the threshold at which the Si3232 will switch from the low battery, V_{BLO}, to the high battery, V_{BHI}, due to an off-hook to on-hook transition. The BATLTH RAM location specifies the threshold at which the Si3232 will switch from V_{BHI} to V_{BLO} due to a transition from the on-hook or ringing state to the off-hook state or because the overhead during active off-hook mode is sufficient to feed the subscriber loop using a lower battery voltage.

The low-pass filter coefficient is calculated using the equation below and is entered into the BATLPF RAM location.

$$BATLPF = [(2\pi f \times 4096)/800] \times 2^3$$

Where f = the desired cutoff frequency of the filter

The programmable range of the filter is from 0 (blocks all signals) to 4000h (unfiltered). A typical value of 10 (0A10h) is sufficient to filter out any unwanted ac artifacts while allowing the dc information to pass through the filter.

Table 17 provides the register and RAM locations used for programming the battery switching functions.

Table 17. Register and RAM Locations used for Battery Switching

Parameter	Register/RAM Mnemonic	Register/RAM Bits	Programmable Range	Resolution (LSB Size)
High Battery Detect Threshold	BATHTH	BATHTH[14:0]	0 to 160.173 V*	628 mV (4.907 mV)
Low Battery Detect Threshold	BATLTH	BATLTH[14:0]	0 to 160.173 V*	628 mV (4.907 mV)
Ringing Battery Switch	RLYCON	GPO	Toggle	N/A
Battery Select Indicator	RLYCON	BSEL	Toggle	N/A
Battery Switching LPF	BATLPF	BATLPF[15:3]	0 to 4000	N/A
***Note:** The usable range for BATHTH and BATLTH is limited to the V_{BHI} voltage.				

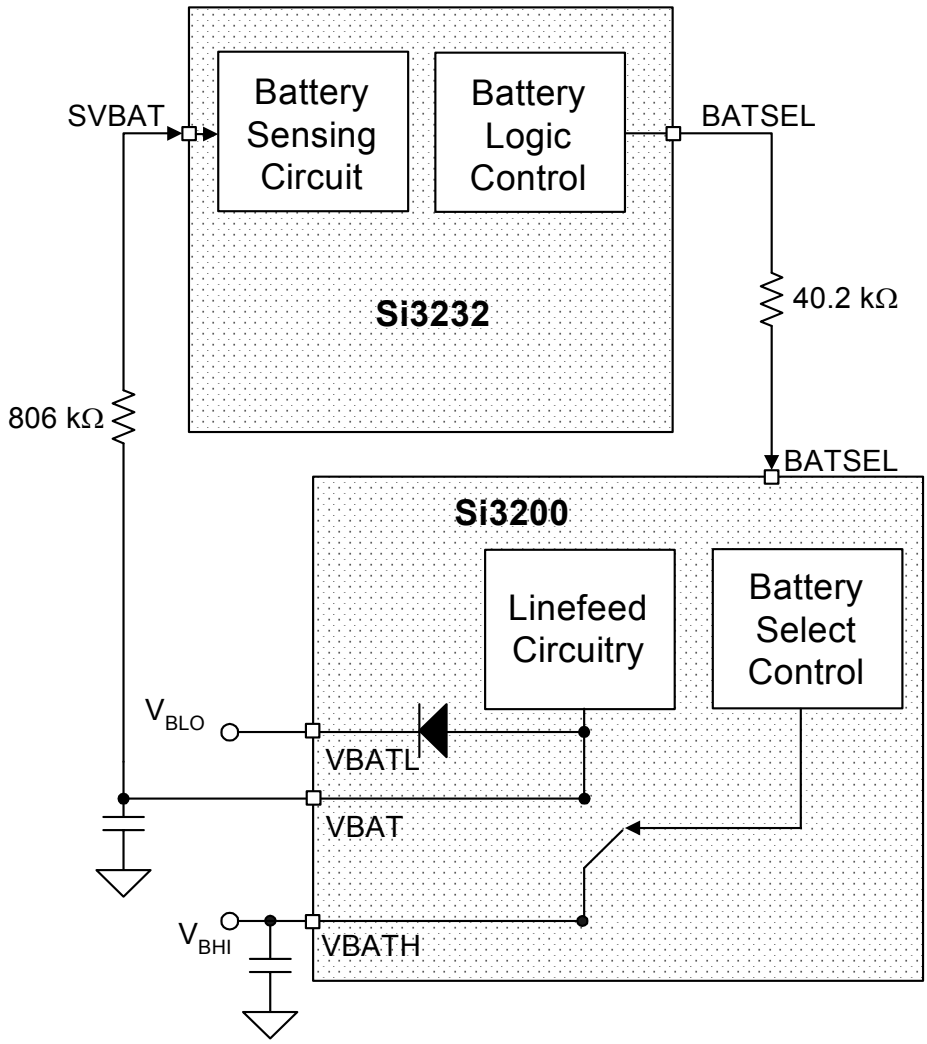

Figure 12. External Battery Switching Using the Si3232 and Si3200

When generating a high-voltage ringing amplitude using the Si3220, the power dissipated during the OHT state typically increases due to operating from the ringing battery supply in this mode. To reduce power, the Si3232/Si3200 chipset provides the ability to accommodate up to three separate battery supplies by implementing a secondary battery switch using a few low-cost external components as illustrated in Figure 13. The Si3232's BATSEL pin is used to switch between the V_{BHI} (typically –48 V) and V_{BLO} (typically –24 V) rails using the switch internal to the Si3200. The Si3232's GPO pin is used along with the external transistor circuit to switch the V_{BRING} rail (the ringing voltage battery rail) onto the Si3200's VBAT pin when ringing is enabled. The GPO signal is driven automatically by the ringing cadence provided that the RRAIL bit of the RLYCON register is set to 1 (signifying that a third battery rail is present).

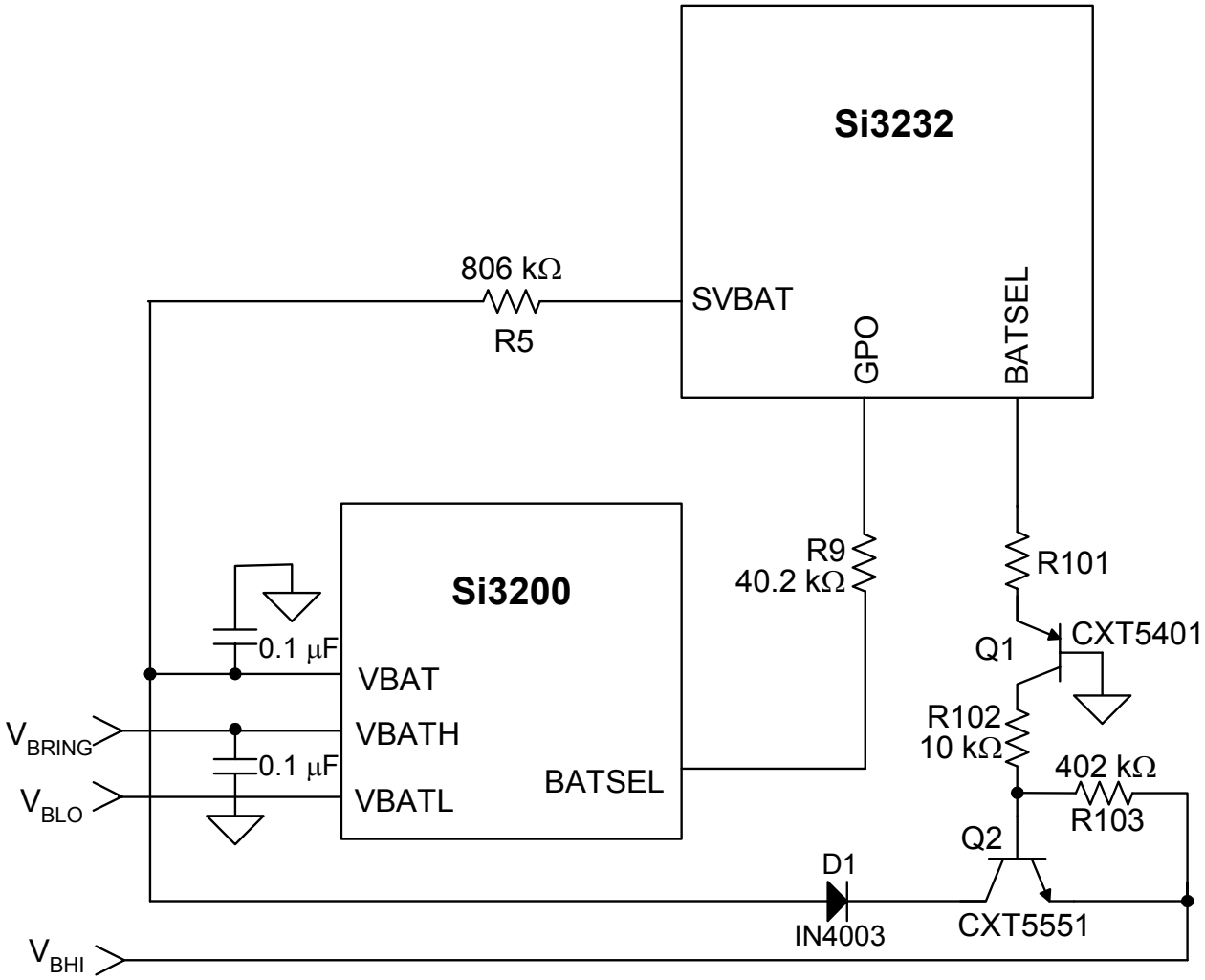

Figure 13. Three-Battery Switching with Si3232

Table 18. 3-Battery Switching Components

Component	Value	Comments
D1	200 V, 200 mA	IN4003 or similar
Q1	100 V PNP	CXT5401 or similar
Q2	100 V NPN	CXT5551 or similar
R101	1/10 W, ±5%	2.4 kΩ for V_{DD} = 3.3 V 3.9 kΩ for V_{DD} = 5 V
R102	10 kΩ, 1/10 W, ±5%	
R103	402 kΩ, 1/10 W, ±1%	

4.5.1. Loop Closure Detection

Loop closure detection is required to accurately signal a terminal device going off-hook during the Active or On-Hook Transmission linefeed states (forward or reverse polarity). The functional blocks required to implement a loop closure detector are shown in Figure 14, and the register set for detecting a loop closure event is provided in Table 19. The primary input to the system is the Loop Current Sense value provided by the voltage/current/power monitoring circuitry and reported in the ILOOP RAM address. The loop current (I_{LOOP}) is computed by the ISP using the equations shown below. Refer to Figure 11 on page 26 for the discrete bipolar transistor references used in the equation below (Q1, Q2, Q5 and Q6 – note that the Si3200 has corresponding MOS transistors). The same I_{LOOP} equation applies to the discrete bipolar linefeed as well as the Si3200 linefeed device. The following equation is conditioned by the CMH status bit in register LCRRTP and by the linefeed state as indicated by the LFS field in the LINEFEED register.

$$I_{loop} = I_{Q1} - I_{Q6} + I_{Q5} - I_{Q2} \text{ in TIP-OPEN or RING-OPEN}$$

$$= \frac{I_{Q1} - I_{Q6} + I_{Q5} - I_{Q2}}{2} \text{ in all other states}$$

If the CMHITH (RAM 36) threshold is exceeded, the CMH bit is 1, and I_{Q1} is forced to zero in the FORWARD-ACTIVE and TIP-OPEN states, or I_{Q2} is forced to zero in the REVERSE-ACTIVE and RING-OPEN states. The other currents in the equation are allowed to contribute normally to the I_{LOOP} value.

The conditioning due to the CMH bit (LCRRTP Register) and LFS field (LINEFEED Register) states can be summarized as follows:

- IQ1 = 0 if (CMH = 1 AND (LFS = 1 OR LFS = 3))
- IQ2 = 0 if (CMH = 1 AND (LFS = 5 OR LFS = 7))

The output of the Input Signal Processor is the input to a programmable digital low-pass filter, which can be used to remove unwanted ac signal components before threshold detection.

The low-pass filter coefficient is calculated using the following equation and is entered into the LCRLPF RAM location.

$$LCRLPF = [(2\pi f \times 4096)/800] \times 2^3$$

Where f is the desired cutoff frequency of the filter.

The programmable range of the filter is from 0h (blocks all signals) to 4000h (unfiltered). A typical value of 10 (0A10h) is sufficient to filter out any unwanted ac artifacts while allowing the dc information to pass through the filter.

The output of the low-pass filter is compared to a programmable threshold, LCROFFHK. Hysteresis is enabled by programming a second threshold, LCRONHK, to detect the loop going to an OPEN or on-hook state. The threshold comparator output feeds a programmable debounce filter. The output of the debounce filter remains in its present state unless the input remains in the opposite state for the entire period of time programmed by the loop-closure debounce interval, LCRDBI. There is also a loop-closure mask interval, LCRMASK, that is used to mask transitions caused when an internal ringing burst (no dc offset) ends in the presence of a high REN load. If the debounce interval has been satisfied, the LCR bit will be set to indicate that a valid loop closure has occurred.

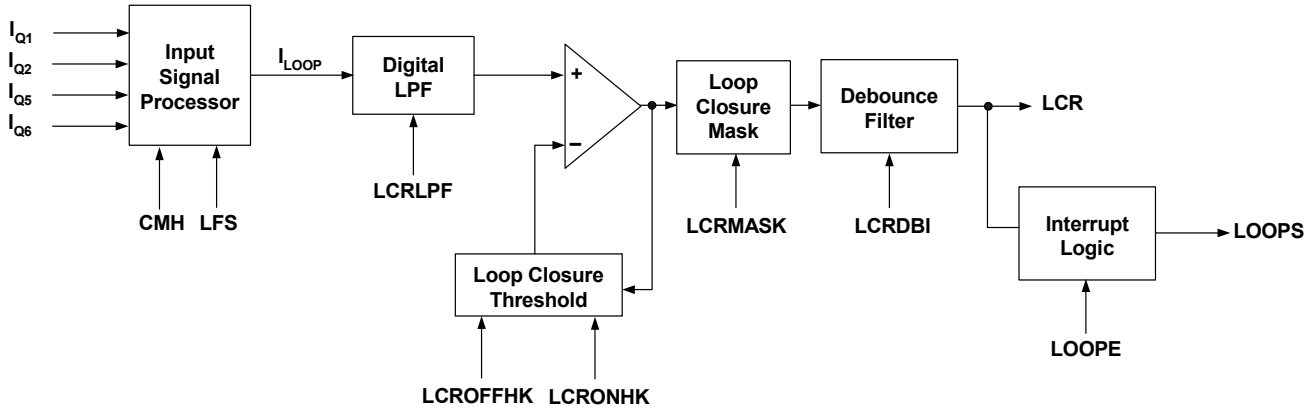

Figure 14. Loop Closure Detection Circuitry

Table 19. Register and RAM Locations used for Loop Closure Detection

Parameter	Register/ RAM Mnemonic	Register/RAM Bits	Programmable Range	LSB Size	Resolution
Loop Closure Interrupt Pending	IRQVEC2	LOOPS	Yes/No	N/A	N/A
Loop Closure Interrupt Enable	IRQEN2	LOOPE	Yes/No	N/A	N/A
Linefeed Shadow	LINEFEED	LFS[2:0]	Monitor only	N/A	N/A
Loop Closure Detect Status	LCRRTP	LCR	Monitor only	N/A	N/A
Loop Closure Detect Debounce Interval	LCRDBI	LCRDBI[15:0]	0 to 40.96 s	1.25 ms	1.25 ms
Loop Current Sense	ILOOP	ILOOP[15:0]	0 to 101.09 mA	3.097 µA	500 µA[1]
Loop Closure Threshold (on-hook to off-hook)	LCROFFHK	LCROFFHK[15:0]	0 to 101.09 mA[2]	3.097 µA	396.4 µA
Loop Closure Threshold (off-hook to on-hook)	LCRONHK	LCRONHK[15:0]	0 to 101.09 mA[2]	3.097 µA	396.4 µA
Loop Closure Filter Coefficient	LCRLPF	LCRLPF[15:3]	0 to 4000h	N/A	N/A
Loop Closure Mask Interval	LCRMASK	LCRMASK[15:0]	0 to 40.96 s	1.25 ms	1.25 ms

Notes:
1. I_{LOOP} is a calculated value based on measured I_{Q1}–I_{Q4} currents. The resulting effective resolution is approximately 500 µA.
2. The usable range for LCRONHK and LCROFFHK is limited to 61 mA. Entering a value >61 mA disables threshold detection.

4.5.2. Ground Key Detection

Ground key detection detects an alerting signal from the terminal equipment during the tip open or ring open linefeed states. The functional blocks required to implement a ground key detector are shown in Figure 15, and the register set for detecting a ground key event is provided in Table 22 on page 36. The primary input to the system is the longitudinal current sense value provided by the voltage/current/power monitoring circuitry and reported in the ILONG RAM address. The I_{LONG} value is produced in the ISP provided the LFS bits in the linefeed register indicate the device is in the tip open or ring open state.

The longitudinal current (I_{LONG}) is computed as shown in the following equation. Refer to Figure 11 on page 26 for the transistor references used in the equation (Q1, Q2, Q5 and Q6 – note that the Si3200 has corresponding MOS transistors). The same I_{LONG} equation applies to the discrete bipolar linefeed as well as the Si3200 linefeed device.

$$I_{LONG} = \frac{I_{Q1} - I_{Q6} - I_{Q5} + I_{Q2}}{2}$$

The output of the ISP (I_{LONG}) is the input to a programmable, digital low-pass filter, which removes unwanted ac signal components before threshold detection.

The low-pass filter coefficient is calculated using the following equation and is entered into the LONGLPF RAM location:

$$\text{LONGLPF} = \left[\frac{(2\pi f \times 4096)}{800}\right] \times 2^3$$

Where f = the desired cutoff frequency of the filter.

The programmable range of the filter is from 0h (blocks all signals) to 4000h (unfiltered). A typical value of 10 (0A10h) is sufficient to filter out any unwanted ac artifacts while allowing the dc information to pass through the filter.

The output of the low-pass filter is compared to the programmable threshold, LONGHITH. Hysteresis is enabled by programming a second threshold, LONGLOTH, to detect when the ground key is released. The threshold comparator output feeds a programmable debounce filter.

The output of the debounce filter remains in its present state unless the input remains in the opposite state for the entire period of time programmed by the loop closure debounce interval, LONGDBI. If the debounce interval is satisfied, the LONGHI bit is set to indicate that a valid ground key event has occurred.

When the Si3220/25 detects a ground key event, the linefeed automatically transitions from the TIP-OPEN (or RING-OPEN) state to the FORWARD-ACTIVE (or REVERSE-ACTIVE) state. However, this automatic state transition is triggered by the LCR bit becoming active (i.e., =1), and not by the LONGHI bit.

While I_{LONG} is used to generate the LONGHI status bit, a transition from TIP-OPEN to the FORWARD-ACTIVE state (or from the RING-OPEN to the REVERSE-ACTIVE state) occurs when the RING terminal (or TIP terminal) is grounded and is based on the LCR bit and implicitly on exceeding the LCROFFHK threshold.

As an example of ground key detection, suppose that the Si3220/25 has been programmed with the current values shown in Table 20.

Table 20. Settings for Ground Key Example

ILIM	21 mA
LCROFFHK	14 mA
LCRONHK	10 mA
LONGHITH	7 mA
LONGLOTH	5 mA

With the settings of Table 20, the behavior of I_{LOOP}, I_{LONG}, LCR, LONGHI, and CMHIGH is as shown in Table 21. The entries under “Loop State” indicate the condition of the loop, as determined by the equipment terminating the loop. The entries under “LINEFEED Setting” indicate the state initially selected by the host CPU (e.g., TIP-OPEN) and the automatic transition to the FORWARD-ACTIVE state due to a ground key event (when RING is connected to GND). The transition from state #2 to state #3 in Table 21 is the automatic transition from TIP-OPEN to FWD-ACTIVE in response to LCR = 1.

Table 21. State Transitions During Ground Key Detection

#	Loop State	LINEFEED State	I_{LOOP} (mA)	I_{LONG} (mA)	LCR	LONGHI	CMHIGH
1	LOOP OPEN	LFS = 3 (TIP-OPEN)	0	0	0	0	0
2	RING-GND	LFS = 3 (TIP-OPEN)	22	–11	1	1	0
3	RING-GND	LFS = 1 (FWD-ACTIVE)	22	–11	1	1	1
4	LOOP CLOSURE	LFS = 1 (FWD-ACTIVE)	21	0	1	0	0
5	LOOP OPEN	LFS = 1 (FWD-ACTIVE)	0	0	0	0	0

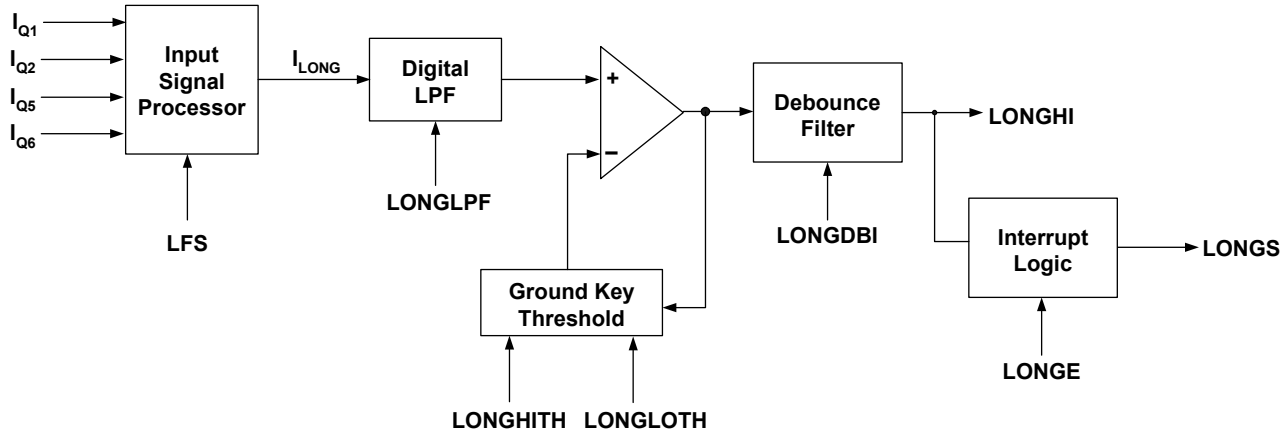

Figure 15. Ground Key Detection Circuitry

Table 22. Register and RAM Locations used for Ground Key Detection

Parameter	Register/ RAM Mnemonic	Register/RAM Bits	Programmable Range	LSB Size	Resolution
Ground Key Interrupt Pending	IRQVEC2	LONGS	Yes/No	N/A	N/A
Ground Key Interrupt Enable	IRQEN2	LONGE	Yes/No	N/A	N/A
Linefeed Shadow	LINEFEED	LFS[2:0]	Monitor only	N/A	N/A
Ground Key Detect Status	LCRRTP	LONGHI	Monitor only	N/A	N/A
Ground Key Detect Debounce Interval	LONGDBI	LONGDBI[15:0]	0 to 40.96 s	1.25 ms	1.25 ms
Longitudinal Current Sense	ILONG	ILONG[15:0]	Monitor only		See Table 14
Ground Key Threshold (high)	LONGHITH	LONGHITH[15:0]	0 to 101.09 mA*	3.097 µA	396.4 µA
Ground Key Threshold (low)	LONGLOTH	LONGLOTH[15:0]	0 to 101.09 mA*	3.097 µA	396.4 µA
Ground Key Filter Coefficient	LONGLPF	LONGLPF[15:3]	0 to 4000h	N/A	N/A

Note: The usable range for LONGHITH and LONGLOTH is limited to 16 mA. Setting a value >16 mA will disable threshold detection

4.6. Ringing Generation

The Si3232 is designed to provide a balanced ringing waveform with or without dc offset. The ringing frequency, cadence, waveshape, and dc offset are all register-programmable.

Using a balanced ringing scheme, the ringing signal is applied to both the TIP and the RING lines using ringing waveforms that are 180° out of phase with each other. The resulting ringing signal seen across TIP-RING is twice the amplitude of the ringing waveform on either the TIP or the RING line, which allows the ringing circuitry to withstand only half the total ringing amplitude seen across TIP-RING.

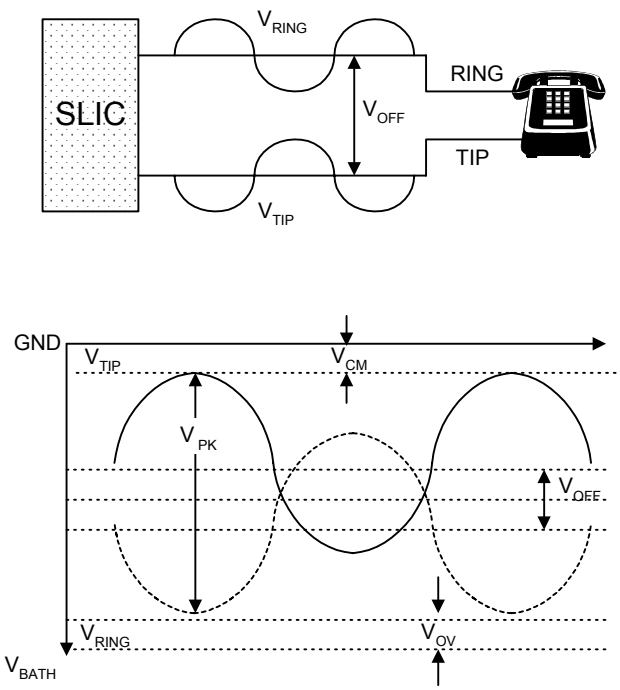

Figure 16. Balanced Ringing Waveform and Components

The purpose of an internal ringing scheme is to provide >40 V_{rms} into a 5 REN load at the terminal equipment using a user-provided ringing battery supply. The specific ringing supply voltage required depends on the ringing voltage desired.

The ringing amplitude at the terminal equipment depends on the loop impedance as well as the load impedance in REN. The following equation can be used to determine the TIP-RING ringing amplitude required for a specific load and loop condition.

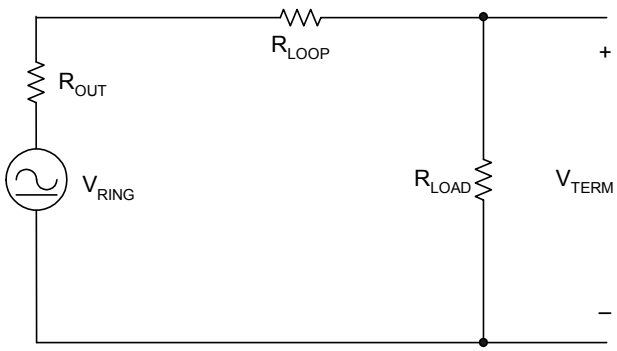

Figure 17. Simplified Loop Circuit During Ringing

$$V_{TERM} = V_{RING} \times \left[\frac{R_{LOAD}}{R_{LOAD} + R_{LOOP} + R_{OUT}}\right]$$

where

$$R_{LOOP} = 0.09\ \Omega \text{ per foot for 26 AWG wire}$$

$$R_{OUT} = 320\ \Omega$$

$$R_{LOAD} = \frac{7000\ \Omega}{\#REN}$$

When ringing longer loop lengths, adding a dc offset voltage is necessary to reliably detect a ring trip condition (off-hook phone). Adding dc offset to the ringing signal decreases the maximum possible ringing amplitude. Adding significant dc offset also increases the power dissipation in the Si3200 and may require additional airflow or a modified PCB layout to maintain acceptable operating temperatures. The Si3232 automatically applies and removes the ringing signal during V_{OC}-crossing periods to reduce noise and crosstalk to adjacent lines. Table 23 provides a list of registers required for internal ringing generation.

Table 23. Register and RAM Locations used for Ringing Generation

Parameter	Register/RAM Mnemonic	Register/RAM Bits	Programmable Range	Resolution (LSB Size)
Ringing Waveform	RINGCON	TRAP	Sinusoid/Trapezoid	N/A
Ringing Active Timer Enable	RINGCON	TAEN	Enabled/Disabled	N/A
Ringing Inactive Timer Enable	RINGCON	TIEN	Enabled/Disabled	N/A
Ringing Oscillator Enable Monitor	RINGCON	RINGEN	Enabled/Disabled	N/A
Ringing Oscillator Active Timer	RINGTALO/ RINGTAHI	RINGTA[15:0]	0 to 8.19 s	125 ms
Ringing Oscillator Inactive Timer	RINGTILO/ RINGTIHI	RINGTI[15:0]	0 to 8.19 s	125 ms
Linefeed Control (Initiates Ringing State)	LINEFEED	LF[2:0]	000 to 111	N/A
On-Hook Line Voltage	VOC	VOC[15:0]	0 to 63.3 V	1.005 V (4.907 mV)
Ringing Voltage Offset	RINGOF	RINGOF[15:0]	0 to 63.3 V	1.005 V (4.907 mV)
Ringing Frequency	RINGFRHI/ RINGFRLO	RINGFRHI[14:3]/ RINGFRLO[14:3]	4 to 100 Hz	
Ringing Amplitude	RINGAMP	RINGAMP[15:0]	0 to 160.173 V	628 mV (4.907 mV)
Ringing Initial Phase Sinusoidal Trapezoid	RINGPHAS	RINGPHAS[15:0]	N/A 0 to 1.024 s	N/A 31.25 µs
Ringing Overhead Voltage	VOVRING	VOVRING[15:0]	0 to 63.3 V	1.005 V (4.907 mV)
Ringing Speedup Timer	SPEEDUPR	SPEEDUPR[15:0]	0 to 40.96 s	1.25 ms

4.6.1. Internal Sinusoidal Ringing

A sinusoidal ringing waveform is generated by using an on-chip digital tone generator. The tone generator used to generate ringing tones is a two-pole resonator with a programmable frequency and amplitude. Since ringing frequencies are low compared to the audio band signaling frequencies, the sinusoid is generated at a 1 kHz rate. The ringing generator is programmed via the RINGFREQ, RINGAMP, and RINGPHAS RAM locations. The equations are as follows:

$$\text{coeff} = \cos\left(\frac{2\pi f}{1000\ \text{Hz}}\right)$$

$$\text{RINGFREQ} = \text{coeff} \times 2^{23}$$

$$\text{RINGAMP} = \frac{1}{4}\sqrt{\frac{1-\text{coeff}}{1+\text{coeff}}} \times (2^{15}) \times \frac{\text{Desired } V_{PK}}{160.173\ \text{V}}$$

$$\text{RINGPHAS} = 0$$

For example, to generate a 60 V_{rms} (87 V_{PK}), 20 Hz ringing signal, the equations are as follows:

$$\text{coeff} = \cos\left(\frac{2\pi 20}{1000\ \text{Hz}}\right) = .99211$$

$$\text{RINGFREQ} = .99211 \times (2^{23}) = 8322461 = \text{0x7EFD9D}$$

$$RINGAMP = \frac{1}{4}\sqrt{\frac{.00789}{1.99211}} \times (2^{15}) \times \frac{85}{160.173} = 273 = 0x111$$

In addition to the variable frequency and amplitude, there is a selectable dc offset (V_{OFF}) that can be added to the waveform. The dc offset is defined in the RINGOF RAM location. The ringing generator has two timers which allow on/off cadence settings up to 8 s on/8 s off. In addition to controlling ringing cadence, these timers control the transition into and out of the ringing state.

To initiate ringing, the user must program the RINGFREQ, RINGAMP, and RINGPHAS RAM addresses as well as the RINGTA, and RINGTI registers, and select the ringing waveshape and dc offset. Once this is done, the TAEN and TIEN bits are set as desired. Ringing state is invoked by a write to the linefeed register. At the expiration of RINGTA, the Si3232 turns off the ringing waveform and goes to the on-hook transmission state. At the expiration of RINGTI, ringing is initiated again. This process continues as long as the two timers are enabled and the linefeed register remains in the ringing state.

4.6.2. Internal Trapezoidal Ringing

In addition to the traditional sinusoidal ringing waveform, the Si3232 can generate a trapezoidal ringing waveform similar to the one illustrated in Figure 19. The RINGFREQ, RINGAMP, and RINGPHAS RAM locations are used for programming the ringing wave shape as follows:

RINGPHAS = 4 x Period x 8000

RINGAMP = (Desired V/160.8 V) x (2^{15})

RINGFREQ = (2 x RINGAMP) / (t_{RISE} x 8000)

RINGFREQ is a value that is added or subtracted from the waveform to ramp the signal up or down in a linear fashion. This value is a function of rise time, period, and amplitude, where rise time and period are related through the following equation for the crest factor of a trapezoidal waveform.

$$t_{RISE} = \frac{3}{4}T\left(1 - \frac{1}{CF^2}\right)$$

where

$$T = Period = \frac{1}{f_{RING}}$$

$$CF = \text{desired crest factor}$$

So, for a 90 V_{PK}, 20 Hz trapezoidal waveform with a crest factor of 1.3, the period is 0.05 s, and the rise time requirement is 0.015 s.

RINGPHAS = 4 x 0.05 x 8000 = 1600 (0x0640)

RINGAMP = 90/160.8 x (2^{15}) = 18340 (0x47A5)

RINGFREQ = (2 x RINGAMP) (0.0153 x 8000) = 300 (0x012C)

The time registers and interrupts described in the sinusoidal ring description also apply to the trapezoidal ring waveform.

4.7. Internal Unbalanced Ringing

The Si3232 also provides the ability to generate a traditional battery-backed unbalanced ringing waveform for ringing terminating devices that require a high dc content or for use in ground-start systems that cannot tolerate a ringing waveform on both the TIP and RING leads. The unbalanced ringing scheme applies the ringing signal to the RING lead; the TIP lead remains at the programmed VCM voltage that is very close to ground. A programmable dc offset can be preset to provide dc current for ring trip detection. Figure 18 illustrates the internal unbalanced ringing waveform.

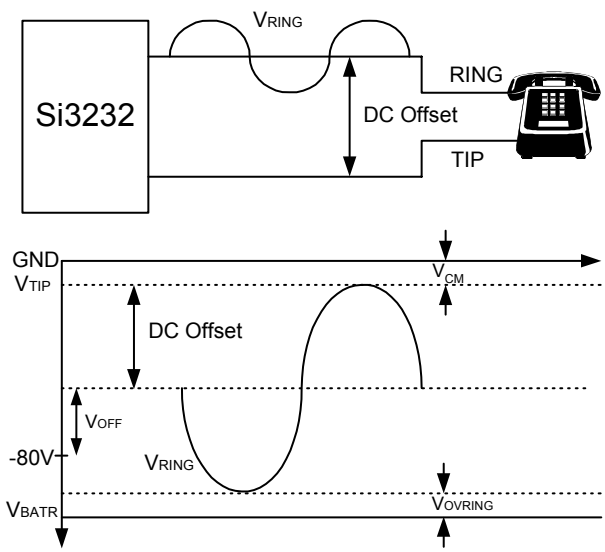

Figure 18. Internal Unbalanced Ringing

To enable unbalanced ringing, set the RINGUNB bit of the RINGCON register. As is the case with internal balanced ringing, the unbalanced ringing waveform is generated by using the on-chip ringing tone generator. The tone generator used to generate ringing tones is a two-pole resonator with programmable frequency and amplitude. Since ringing frequencies are low compared to the audio band signaling frequencies, the ringing waveform is generated at a 1 kHz rate.

The ringing generator is programmed via the RINGAMP, RINGFREQ, and RINGPHAS registers. The RINGOF register is used to set the dc offset position around

which the RING lead oscillates. The dc offset is set at a dc point equal to V_{CM} – (–80 V + V_{OFF}), where V_{OFF} is the value that is input into the RINGOF RAM location. Positive V_{OFF} values cause the dc offset point to move closer to ground (lower dc offset), and negative V_{OFF} values have the opposite effect. The dc offset can be set to any value; however, the ringing signal is clipped digitally if the dc offset is set to a value that is less than half the ringing amplitude. In general, the following equation must hold true to ensure the battery voltage is sufficient to provide the desired ringing amplitude:

$$|V_{BATR}| > |V_{RING,PK} + (-80\ V + V_{OFF}) + V_{OVRING}|$$

It is possible to create reverse polarity unbalanced ringing waveforms (the TIP lead oscillates while the RING lead stays constant) by setting the UNBPOLR bit of the RINGCON register. In this mode, the polarity of V_{OFF} must also be reversed (in normal ringing polarity, V_{OFF} is subtracted from –80 V, and in reverse polarity, ringing V_{OFF} is added to –80 V).

4.7.1. Ringing Coefficients

The ringing coefficients are calculated in decimal for sinusoidal and trapezoidal waveforms. The RINGPHAS and RINGAMP hex values are decimal-to-hex conversions in 16-bit, 2's complement representations for their respective RAM locations.

To obtain sinusoidal RINGFREQ RAM values, the RINGFREQ decimal number is converted to a 24-bit 2's complement value. The lower 12 bits are placed in RINGFRLO bits 14:3. RINGFRLO bits 15 and 2:0 are cleared to 0. The upper 12 bits are set in a similar manner in RINGFRHI, bits 13:3. RINGFRHI bit 14 is the sign bit and RINGFRHI bits 2:0 are cleared to 0.

For example, the register values for RINGFREQ = 0x7EFD9D are as follows:

RINGFRHI = 0x3F78
RINGFRLO = 0x6CE8

To obtain trapezoidal RINGFREQ RAM values, the RINGFREQ decimal number is converted to an 8-bit, 2's complement value. This value is loaded into RINGFRHI. RINGFRLO is not used.

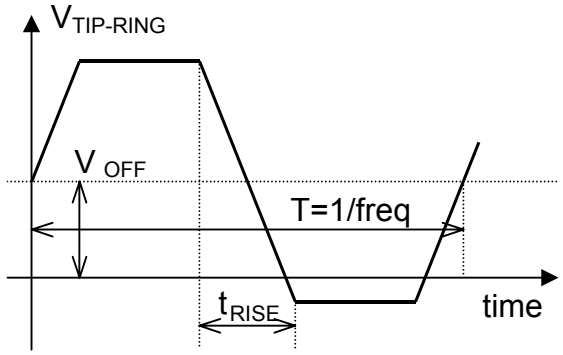

Figure 19. Trapezoidal Ringing Waveform

4.7.2. Ringing DC Offset Voltage

A dc offset voltage can be added to the Si3232's ac ringing waveform by programming the RINGOF RAM address to the appropriate setting. The value of RINGOF is calculated as follows:

$$RINGOF = \frac{V_{OFF}}{160.8} \times 2^{15}$$

4.7.3. Linefeed Overhead Voltage Considerations During Ringing

The ringing mode output impedance allows ringing operation without overhead voltage modification (V_{OVR} = OV). If an offset of the ringing signal from the RING lead is desired, V_{OVR} can be used for this purpose.

4.7.4. Ringing Power Considerations

The total power consumption of the Si3232/Si3200 chipset using internal ringing generation is dependent on the V_{DD} supply voltage, the desired ringing amplitude, the total loop impedance, and the ac load impedance (number of REN). The following equations can be used to approximate the total current required for each channel during ringing mode.

$$I_{DD,AVE} = \frac{V_{RING,PK}}{Z_{LOOP}} \times \frac{2}{\pi} + I_{DD,OH}$$

$$I_{BAT,AVE} = \frac{V_{RING,PK}}{Z_{LOOP}} \times \frac{2}{\pi}$$

Where:

$$V_{RING,PK} = V_{RING,RMS} \times \sqrt{2}$$

$$Z_{LOOP} = R_{LOOP} + R_{LOAD} + R_{OUT}$$

$$R_{LOAD} = \frac{7000}{REN} \text{ (for North America)}$$

R_{LOOP} = loop impedance

R_{OUT} = Si3232 ouput impedance = 320Ω

$I_{DD,OH}$ = I_{DD} overhead current = 12 mA

4.8. Ring Trip Detection

A ring trip event signals that the terminal equipment has transitioned to an off-hook condition after ringing has commenced, thus ensuring that the ringing signal is removed before normal speech begins. The Si3232 is designed to implement either an ac- or dc-based internal ring trip detection scheme or a combination of both schemes. This allows system-design flexibility for addressing varying loop lengths of different applications. An ac ring trip detection scheme cannot reliably detect an off-hook condition when sourcing longer loop lengths, as the 20 Hz ac impedance of an off-hook long loop is indistinguishable from a heavily-loaded (5 REN) short loop in the on-hook state. Because of this situation, a dc ring trip detection scheme is required when sourcing longer loop lengths.

The Si3232 can implement either an ac- or dc-based ring trip detection scheme depending on the application. Table 25 on page 43 lists the registers that must be written or monitored to correctly detect a ring trip condition.

The Si3232 provides the ability to process a ring trip event using only an ac-based detection scheme. Using this scheme eliminates the need for adding dc offset to the ringing signal, which reduces the total power dissipation during the ringing state and maximizes the available ringing amplitude. This scheme is only valid for shorter loop lengths, as it may not be possible to reliably detect a ring trip event if the off-hook line impedance overlaps the on-hook impedance at 20 Hz.

The Si3232 also provides the ability to add a dc offset component to the ringing signal and detect a ring trip event by monitoring the dc loop current flowing once the terminal equipment transitions to the off-hook state. Although adding dc offset reduces the maximum available ringing amplitude (using the same ringing supply), this method is required to reliably detect a valid ring trip event when sourcing longer loop lengths. The dc offset can be programmed from 0 to 63.3 V in the RINGOF RAM address as required to produce adequate dc loop current in the off-hook state.

Depending on the loop length and the ring trip method desired, the ac or dc ring trip detection circuits can be disabled by setting their respective ring trip thresholds (RTACTH or RTDCTH) sufficiently high so it will not trip under any condition.

Figure 20 illustrates the internal functional blocks that serve to correctly detect and process a ring trip event. The primary input to the system is the loop current sense (ILOOP) value provided by the loop monitoring circuitry and reported in the ILOOP RAM location register. This ILOOP register value is processed by the input signal processor block provided that the LFS bits in the Linefeed register value indicate the device is in the ringing state. The output of the input signal processor then feeds into a pair of programmable digital low-pass filters; one for the ac ring trip detection path and one for the dc path. The ac path also includes a full-wave rectifier block prior to the LPF block. The outputs of each low-pass filter block are then passed on to a programmable ring trip threshold (RTACTH for ac detection and RTDCTH for dc detection). Each threshold block output is then fed to a programmable debounce filter that ensures a valid ring trip event. The output of each debounce filter remains constant unless the input remains in the opposite state for the entire period of time set using the ac and dc ring trip debounce interval registers, RTACDB and RTDCDB, respectively. The outputs of both debounce filter blocks are then ORed together. If either the ac or the dc ring trip circuits indicate a valid ring trip event has occurred, the RTP bit is set. Either the ac or dc ring trip detection circuits can be disabled by setting the respective ring trip threshold sufficiently high so it will not trip under any condition. A ring trip interrupt is also generated if the RTRIPE bit has been enabled.

4.9. Ring Trip Timeout Counter

The Dual ProSLIC incorporates a ringtrip timeout counter, RTCOUNT, that monitors the status of the ringing control. When exiting ringing, the Dual ProSLIC will allow the ringtrip timeout counter amount of time (RTCOUNT x 1.25 ms/LSB) for the mode to switch to On-hook Transmission or Active. The mode that is being exited to is governed by whether the command to exit ringing is a ringing active timer expiration (on-hook transmission) or ringtrip/manual mode change (Active mode). The ringtrip timeout counter will assure ringing is exited within its time setting (RTCOUNT x 1.25 ms/LSB, typically 200 ms).

4.10. Ring Trip Debounce Interval

The ac and dc ring trip debounce intervals can be calculated based on the following equations:

RTACDB = $t_{debounce}$ (1600/RTPER)

RTDCDB = $t_{debounce}$ (1600/RTPER)

4.11. Loop Closure Mask

The Dual ProSLIC implements a loop closure mask to ensure mode change between Ringing and Active or On-hook Transmission without causing an erroneous loop-closure detection. The loop-closure mask register, LCRMASK, should be set such that loop-closure detections are ignored for (LCRMASK x 1.25 ms/LSB) amount of time. The programmed time is set to mask detection of transitional currents that occur when exiting the ringing mode while driving a reactive load (i.e., 5 REN). A typical setting is 80 ms (LCRMASK = 0x40).

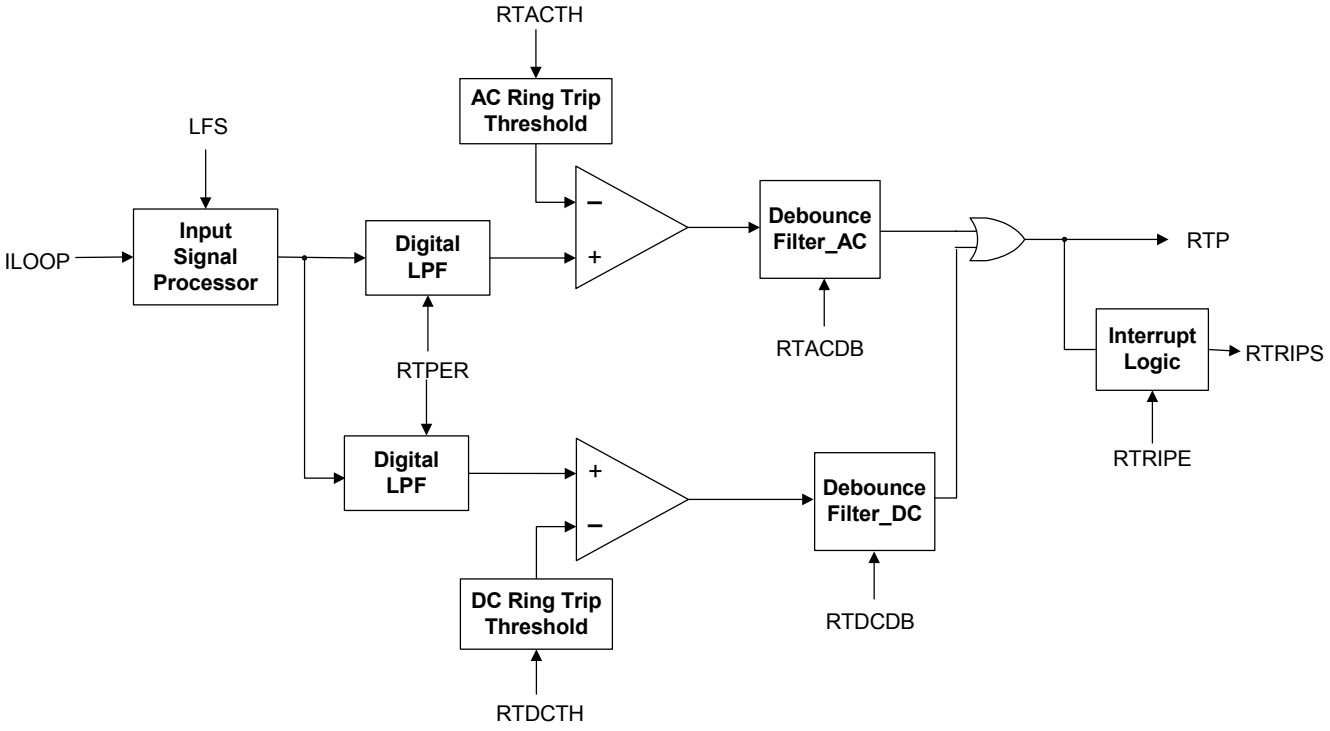

Figure 20. Ring Trip Detect Processing Circuitry

Table 24. Recommended Ring Trip Detection Values[1]

Ringing Frequency	DC Offset Added?	RTPER	RTACTH	RTDCTH	RTACDB/ RTDCDB
16–32 Hz	Yes	$800/f_{RING}$	221 x RTPER	0.577(RTPER x V_{OFF})	See Note 2
	No	$800/f_{RING}$	1.59 x $V_{RING,PK}$ x RTPER	32767	
33–60 Hz	Yes	$2(800/f_{RING})$	221 x RTPER	0.577(RTPER x V_{OFF})	
	No	$2(800/f_{RING})$	1.59 x $V_{RING,PK}$ x RTPER	32767	

Notes:
1. All calculated values should be rounded to the nearest integer.
2. Refer to Ring Trip Debounce Interval for RTACDB and RTDCDB equations.

Table 25. Register and RAM Locations for Ring Trip Detection

Parameter	Register/RAM Mnemonic	Register/ RAM Bits	Programmable Range	Resolution
Ring Trip Interrupt Pending	IRQVEC2	RTRIPS	Yes/No	N/A
Ring Trip Interrupt Enable	IRQEN2	RTRIPE	Enabled/Disabled	N/A
AC Ring Trip Threshold	RTACTH	RTACTH[15:0]	See Table 24	
DC Ring Trip Threshold	RTDCTH	RTDCTH[15:0]	See Table 24	
Ring Trip Sample Period	RTPER	RTPER[15:0]	See Table 24	
Linefeed Shadow (monitor only)	LINEFEED	LFS[2:0]	N/A	N/A
Ring Trip Detect Status (monitor only)	LCRRPT	RTP	N/A	N/A
AC Ring Trip Detect Debounce Interval	RTACDB	RTACDB[15:0]	0 to 40.96 s	1.25 ms
DC Ring Trip Detect Debounce Interval	RTDCDB	RTDCDB[15:0]	0 to 40.96 s	1.25 ms
Loop Current Sense (monitor only)	ILOOP	ILOOP[15:0]	0 to 101.09 mA	See Table 14

4.12. Relay Driver Considerations

The Si3232 includes a general-purpose driver output for each channel (GPOa, GPOb) to drive external test relays. In most applications, the relay can be driven directly from the Si3232 with no external relay drive circuitry required. Figure 21 illustrates the internal relay driver circuitry using a 3 V relay.

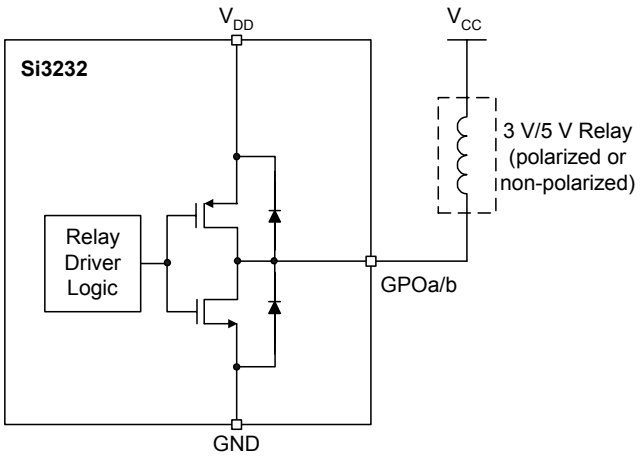

Figure 21. Si3232 Internal Relay Drive Circuitry

The internal driver logic and drive circuitry is powered from the same 3.3 V supply as the chip's main supply (VDD1–VDD4 pins). When operating external relays from a V_{CC} supply that is equal to the chip's V_{DD} supply, an internal diode network provides protection against overvoltage conditions caused by flyback spikes when the relay is opened. Only 3 V relays may be used in the configuration shown in Figure 21, and either polarized or non-polarized relays are acceptable provided both V_{CC} and V_{DD} are powered by a 3.3 V supply. The input impedance, R_{IN}, of the relay driver pins is a constant 11 Ω while sinking less than the maximum rated 85 mA into the pin.

If the desired operating voltage of the relay, V_{CC}, is higher than the Si3232's V_{DD} supply voltage, an external drive circuit is required to eliminate leakage from V_{CC} to V_{DD} through the internal protection diode. In this configuration, a polarized relay is recommended to provide optimal overvoltage protection with minimal external components. Figure 22 illustrates the required external drive circuit, and Table 26 provides recommended values for R_{DRV} for typical relay characteristics and V_{CC} supplies. The output impedance, R_{OUT}, of the relay driver pins is a constant 63 Ω while sourcing less than the maximum rated 28 mA out of the pin.

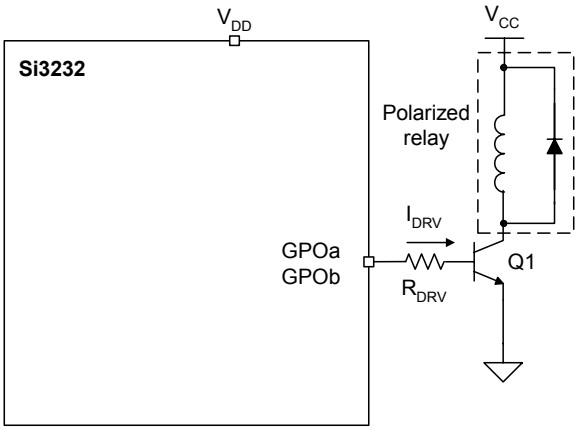

Figure 22. Driving Relays with $V_{CC} > V_{DD}$

The maximum allowable R_{DRV} value can be calculated using the following equation:

$$\mathrm{Max}R_{DRV} = \frac{(V_{DD,MIN} - 0.6\ \mathrm{V})(R_{RELAY})(\beta_{Q1,MIN})}{V_{CC,MAX} - 0.3\ \mathrm{V}} - R_{SOURCE}$$

where $\beta_{Q1,MIN}$ ~ 30 for a 2N2222

Table 26. Recommended R_{DRV} Values

ProSLIC V_{DD}	Relay V_{CC}	Relay R_{COIL}	Maximum R_{DRV}	Recom-mended 5% Value
3.3 V ±5%	3.3 V ±5%	64 Ω	Not Required	—
3.3 V ±5%	5 V ±5%	178 Ω	2718 Ω	2.7 kΩ
3.3 V ±5%	12 V ±10%	1028 Ω	6037 Ω	5.6 kΩ
3.3 V ±5%	24 V ±10%	2880 Ω	8364 Ω	8.2 kΩ
3.3 V ±5%	48 V ±10%	7680 Ω	11092 Ω	11 kΩ

4.12.1. Polarity Reversal

The Si3232 supports polarity reversal for message-waiting functionality as well as various signaling modes. The ramp rate can be programmed for a smooth transition or an abrupt transition to accommodate different application requirements. A wink function is also provided for special equipment that responds to a smooth ramp to V_{OC} = 0 V. Table 27 illustrates the register bits required to program the polarity-reversal modes.

An immediate reversal (hard reversal) of the line polarity is achieved by setting the Linefeed register to the opposite polarity. For example, a transition from Forward Active mode to Reverse Active mode is achieved by changing LF[2:0] from 001 to 101. Polarity reversal can also be accommodated in the OHT and ground-start modes. The POLREV bit is a read-only bit that reflects whether the device is in polarity reversal mode. A smooth polarity reversal is achieved by setting the PREN bit to 1 and setting the RAMP bit to 0 or 1 depending on the desired ramp rate (see Table 27). Polarity reversal is then accomplished by toggling the linefeed register from forward to reverse modes as desired.

A wink function is used to slowly ramp down the TIP-RING voltage (V_{OC}) to 1 followed by a return to the original VOC value (set in the VOC RAM 0 location). This scheme is used to light a message-waiting lamp in certain handsets. To enable this function, no change to the linefeed register is necessary. Instead, the user must set the VOCZERO bit to 1 to cause the TIP-RING voltage to collapse to 0 V at the rate programmed by the RAMP bit. Setting the VOCZERO bit back to 0 causes the TIP-RING voltage to return to its normal setting. A software timer provided by the user can automate the cadence of the wink function. Figure 23 illustrates the wink function.

Table 27. Register and RAM Locations used for Polarity Reversal

Parameter	Programmable Range	Register/RAM Bits	Location
Linefeed	See Table 12	LF[2:0]	LINEFEED
Polarity Reversal Status	Read only	POLREV	POLREV
Wink Function (Smooth transition to Voc = 0 V)	1 = Ramp to 0 V 0 = Return to previous V_{OC}	VOCZERO	POLREV
Smooth Polarity Reversal Enable	0 = Disabled 1 = Enabled	PREN	POLREV
Smooth Polarity Reversal Ramp Rate	0 = 1 V/125 µs 1 = 2 V/125 µs	RAMP	POLREV

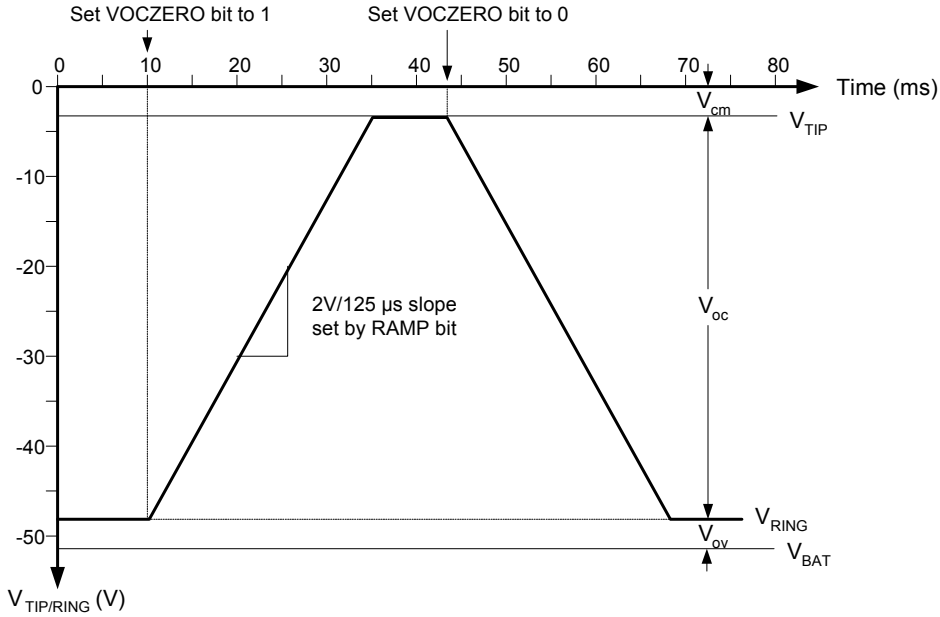

Figure 23. Wink Function with Programmable Ramp Rate

4.13. Two-Wire Impedance Synthesis

Two-wire impedance synthesis is performed on-chip to optimally match the output impedance of the Si3232 to the impedance of the subscriber loop, thus minimizing the receive path signal reflected back onto the transmit path. The Si3232 provides on-chip selectable analog two-wire impedances to meet return loss requirements. The subscriber loop varies with any series impedance due to protection devices placed between the Si3200 outputs and the TIP/RING pair according to the following equation:

$$Z_T = 2R_{PROT} + R_A$$

Where: Z_T is the termination impedance presented to the TIP/RING pair
R_{PROT} is the series resistance caused by protection devices
R_A is the analog portion of the selected impedance

Therefore, the user must also consider the value of R_{PROT} when programming the on-chip analog impedance.

The Si3232's analog impedance synthesis scheme is sufficient for many short loop applications. If a unique complex ac impedance is required, the Si3232's impedance scheme must be augmented or replaced by a DSP-based impedance generator. To turn off the analog impedance coefficients (RS, ZP, and ZZ), set the ZSDIS bit of the ZZ register to 0.

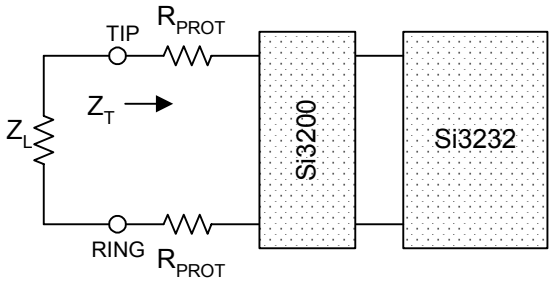

Figure 24. Two-Wire Impedance Simplified Circuit

4.13.1. Transhybrid Balance Filter

The Si3232 is intended to be used with DSP-based codecs that provide the transhybrid balance function. No transhybrid capability exists in the Si3232.

4.13.2. Pulse Metering Generation

The Si3232 offers an internal tone generator suitable for generating tones above the audio frequency band. This oscillator is provided for the generation of billing tones which are typically 12 kHz or 16 kHz. The equations for calculating the pulse metering coefficients are as follows:

$$\text{Coeff} = \cos(2\pi f/64000\ \text{Hz})$$

$$\text{PMFREQ} = \text{coeff} \cdot (2^{14} - 1)$$

$$\text{PMAMPL} = \frac{1}{4}\sqrt{\frac{1-\text{coeff}}{1+\text{coeff}}} \times (2^{15}-1) \times \frac{\text{Desired } V_{PK}}{\text{Full Scale } V_{PK}}$$

where Full Scale V_{PK} = 0.5 V.

The pulse metering oscillator has a volume envelope (linear ramp) on the on/off transitions of the oscillator. The ramp is controlled by the value entered into the PMRAMP RAM address, and the sinusoidal generator output is multiplied by this volume before being sent to the pulse metering DAC. The volume value is incremented by the value in PMRAMP at an 8 kHz rate. The volume ramps from 0 to 7FFF in increments of PMRAMP, thus allowing the value of PMRAMP to set the slope of the ramp. The clip detector stops the ramp once the signal seen at the transmit path exceeds the amplitude threshold set by PMAMPTH, thus providing an automatic gain control (AGC) function to prevent the audio signal from clipping. When the pulse metering signal is turned off, the volume ramps down to 0 by decrementing according to the value of PMRAMP. Figure 24 illustrates the functional blocks involved in pulse-metering generation, and Table 28 presents the register and RAM locations required that must be set to generate pulse-metering signals.

Table 28. Register and RAM Locations Used for Pulse Metering Generation

Parameter	Register/RAM Mnemonic	Register/RAM Bits	Description / Range (LSB Size)
Pulse-Metering Frequency Coefficient	PMFREQ	PMFREQ[15:3]	Sets oscillator frequency
Pulse-Metering Amplitude Coefficient	PMAMPL	PMAMPL[15:0]	Sets oscillator amplitude
Pulse-Metering Attack/Decay Ramp Rate	PMRAMP	PMRAMP[15:0]	0 to PMAMPL (full amplitude)
Pulse-Metering Active Timer	PMTALO/PMTAHI	PULSETA[15:0]	0 to 8.19 s (125 µs)
Pulse-Metering Inactive Timer	PMTILO/PMTIHI	PULSETI[15:0]	0 to 8.19 s (125 µs)
Pulse-Metering, Control Interrupt	IRQVEC1, IRQEN1	PULSTAE, PULSTIE, PULSTAS, PULSTIS	Interrupt status and control registers
Pulse-Metering AGC Amplitude Threshold	PMAMPTH	PMAMPTH[15:0]	0 to 500 mV
PM Waveform Present	PMCON	ENSYNC	Indicates Signal Present
PM Active Timer Enable	PMCON	TAEN1	Enable/disable
PM Inactive Timer Enable	PMCON	TIEN1	Enable/disable
Pulse-Metering Enable	PMCON	PULSE1	Enable/disable

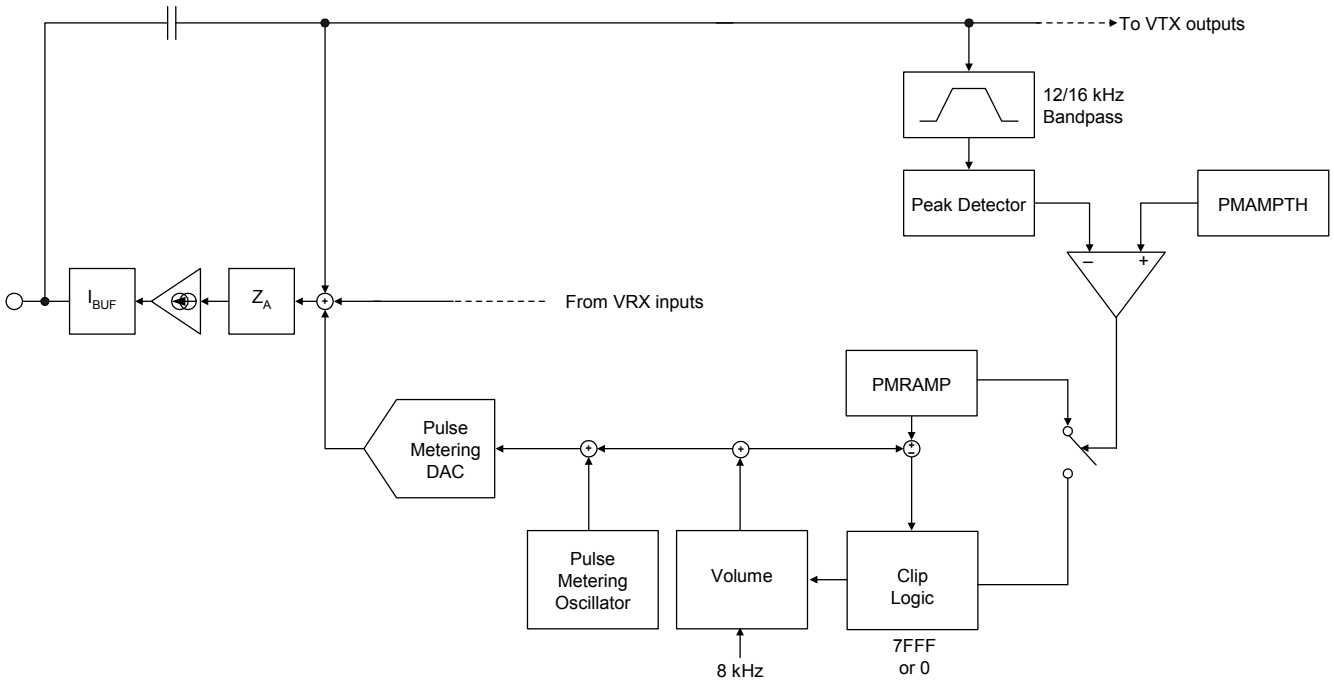

Figure 25. Pulse Metering Generation Block Diagram

4.14. Audio Path Processing

The Si3232 is designed to connect directly to integrated access device (IAD) chipsets, such as the Broadcom BCM3341, as well as other standard codecs that use a differential audio interface. Figure 3 on page 15 illustrates the simplified block diagram for the Si3232.

4.14.1. Transmit Path

In the transmit path, the analog signal fed by the external ac-coupling capacitors, C1 and C2, is amplified by the analog transmit amplifier, ATX, prior to the differential analog output to the A/D converter in the external codec. The ATX stage can be used to add 3 dB of attenuation by programming the ATX bit of the AUDGAIN register. A mute function is also available by setting the ATXMUTE bit of the AUDGAIN register to 1. The main role of the ATX stage is to attenuate incoming signals to best match the input scale of the external A/D converter to maximize signal-to-noise ratio.

The resulting gain levels using the ATX stage are summarized in Table 29. All settings assume a 0 dBm0 TIP-RING audio input signal with the audio TX level measured differentially at VTXPa-VTXNa (for channel a) or VTXPb-VTXNb (for channel b).

Table 29. ATX Attenuation Stage Settings

ATXMUTE Setting	ATX Setting	Typical TX Path Gain
1	X	Mute (no output)
0	0	–1.584 dB (G = 10/12)
0	1	–4.682 dB (G = 7/12)

4.14.2. Receive Path

In the receive path, the incoming audio signal from the D/A converter in the external codec is passed through an ARX stage where the user can attenuate audio signals in the analog domain prior to transmission to TIP/RING. Settings of 0, –3, and –6 dB are available by programming the ARX[1:0] bits of the AUDGAIN register to the appropriate settings. A mute function is also available by setting the ARXMUTE bit of the AUDGAIN register to 1. When not muted, the resulting analog signal is applied at the input of the transconductance amplifier, Gm, which drives the off-chip current buffer, I_{BUF}.

The resulting gain levels using the ARX stage are summarized in Table 30. All settings assume an external codec with 475 Ω per leg of source impedance driving the RX inputs differentially at VRXPa-VRXNa (for channel a) or VRXPb-VRXNb (for channel b) to achieve a 0 dBm0 TIP-RING audio output signal.

Table 30. ARX Attenuation Stage Settings

ARXMUTE Setting	ARX[1:0] Setting	Typical TX Path Gain
1	xx	Mute (no T-R output)
0	00	0 dB (G = 1)
0	01	–3.52 dB (G = 2/3)
0	10	–6.02 dB (G = 1/2)
0	11	Reserved. Do not use.

4.15. System Clock Generation

The Si3232 generates the necessary internal clock frequencies from the PCLK input. PCLK must be synchronous to the 8 kHz FSYNC clock and run at one of the following rates: 256 kHz, 512 kHz, 786 kHz, 1.024 MHz, 1.536 MHz, 1.544 MHz, 2.048 MHz, 4.096 MHz, or 8.192 MHz. The ratio of the PCLK rate to the FSYNC rate is determined by a counter clocked by PCLK. The 3-bit ratio information is automatically transferred into an internal register, PLL_MULT, following a device reset. PLL_MULT is used to control the internal PLL, which multiplies PCLK as needed to generate the rate required to run the internal filters and other circuitry.

The PLL clock synthesizer settles quickly after powerup or update of the PLL-MULT register. The PLL lock process begins immediately after the RESET pin is pulled high and will take approximately 5 ms to achieve lock after RESET is released with stable PCLK and FSYNC. However, the settling time depends on the PCLK frequency and can be predicted based on the following equation:

$t_{SETTLE} = 64 / f_{PCLK}$

Note: Therefore, the RESET pin must be held low during powerup and should only be released when both PCLK and FSYNC signals are known to be stable.

4.15.1. Interrupt Logic

The Si3232 is capable of generating interrupts for the following events:

- Loop current/ring ground detected.
- Ground key detected.
- Ring trip detected.
- Power alarm.
- Ringing active timer expired.
- Ringing inactive timer expired.
- Pulse metering active timer expired.
- Pulse metering inactive timer expired.
- RAM address access complete.

The interface to the interrupt logic consists of six registers. Three interrupt status registers (IRQ0–IRQ3) contain one bit for each of the above interrupt functions. These bits are set when an interrupt is pending for the associated resource. Three interrupt mask registers (IRQEN1–IRQEN3) also contain one bit for each interrupt function. In the case of the interrupt mask registers, the bits are active high. Refer to the appropriate functional description text for operational details of the interrupt functions.

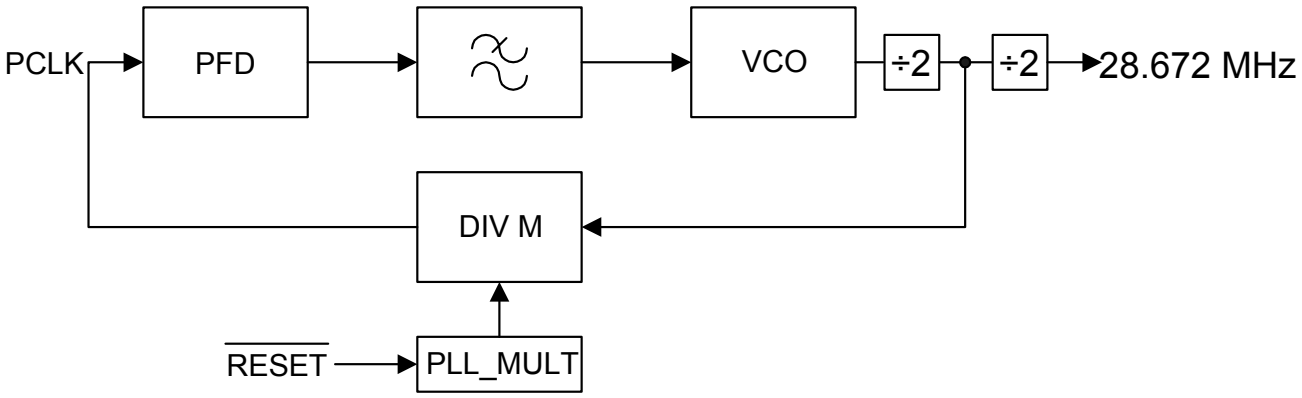

Figure 26. PLL Frequency Synthesizer

When a resource reaches an interrupt condition, it signals an interrupt to the interrupt control block. The interrupt control block then sets the associated bit in the interrupt status register if the mask bit for that interrupt is set. The $\overline{INT}$ pin is a NOR of the bits of the interrupt status registers. Therefore, if a bit in the interrupt status registers is asserted, IRQ asserts low. Upon receiving the interrupt, the interrupt handler should read interrupt status registers to determine which resource is requesting service. All interrupt bits in the interrupt status registers, IRQ0–IRQ3, are cleared following a register read operation. While the interrupt status registers are non-zero, the $\overline{INT}$ pin remains asserted.

4.16. SPI Control Interface

The Si3232 has a 4-wire serial peripheral interface (SPI) control bus modeled after commonly-available micro-controller and serial peripheral devices. The interface consists of a clock (SCLK), chip select (CSB), serial data input (SDI), and serial data output (SDO). In addition, the Si3232 includes a serial data through output (SDI_THRU) to support daisy chain operation of up to eight devices (up to sixteen channels). The device can operate with both 8-bit and 16-bit SPI controllers. Each SPI operation consists of a control byte, an address byte (of which only the seven LSBs are used internally), and either one or two data bytes depending on the width of the controller and whether the access is to a direct or indirect register. Bytes are always transmitted MSB first.

There are a number of variations of usage on this four-wire interface as follows:

- **Continuous clocking**. During continuous clocking, the data transfers are controlled by the assertion of the CSB pin. CSB must be asserted before the falling edge of SCLK on which the first bit of data is expected during a read cycle and must remain low for the duration of the 8-bit transfer (command/address or data), going high after the last rising of SCLK after the transfer.
- **Clock only during transfer**. In this mode, the clock cycles only during the actual byte transfers. Each byte transfer will consist of eight clock cycles in a return to 1 format.
- **SDI/SDO wired operation**. Independent of the clocking options described, SDI and SDO can be treated as two separate lines or wired together if the master is capable of tri-stating its output during the data byte transfer of a read operation.
- **Soft reset**. The SPI state machine resets whenever CSB is asserted during an operation on an SCLK cycle that is not a multiple of eight. This provides a mechanism for the controller to force the state machine to a known state in the case where the controller and the device appear to be out of synchronization.

The control byte has the following structure and is presented on the SDI pin MSB first. The bits are defined in Table 31.

7	6	5	4	3	2	1	0
BRDCST	R/W	REG/RAM	Reserved	CID[0]	CID[1]	CID[2]	CID[3]

Refer to "2. Typical Application Schematic" on page 17. The pulldown resistor on the SDO pin is required to allow this node to discharge after a logic high state to a tri-state condition. The discharge occurs while SDO is tri-stated during an 8 kHz transmission frame. The value of the pulldown resistor depends on the capacitance seen on the SDO pin. In the case of using a single Si3232, the value of the pulldown resistor is 39 kΩ. This assumes a 5 pF SDO pin capacitance and about a 15 pF load on the SDO pin. For applications using multiple Si3232 devices or different capacitive loads on the SDO pin, a different pulldown resistance needs to be calculated.

The following design procedure is an example for calculating the pulldown resistor on the SDO pin in a system using eight Si3232 devices. A pullup resistor is not allowed on the SDO pin.

1. The SDO node must discharge and remain discharged for 244 ns. The discharge occurs during the Hi-Z state; therefore, the time to discharge is equal to the time in Hi-Z time minus the 244 ns.
2. Allow five time constants for discharge where the time constant, t = RC
3. SDO will be in Hi-Z while SDI is sending control and address which are each 8 bits. Using the maximum SCLK frequency of 16.13 MHz, the SDO will be in Hi-Z for 16 / 16.13 MHz = 992 ns.
4. We want to discharge and remain discharged for 244 ns. Therefore, the discharge time is: 992 ns – 244 ns = 748 ns
5. To allow for some margin, let's discharge in 85% of this time. 748nS x 85% = 635.8 ns
6. Determine capacitive load on the SDO pin:
   a. Allow 5 pF for each Si3220 SDO pin that connected together.
   b. Allow ~2 pF/inch (~0.8 pF/cm) for PCB trace.
   c. Include the load capacitance of the host IC input.
7. For a system with eight Si3220 devices, the capacitance seen on the SDO pin would be:
   a. 8 x 5 pF for each Si3220 = 40 pF
   b. Assume 5 inch of PCB trace: 5inch x 2 pF/inch = 10 pF
   c. Host IC input of 5 pF
   d. Total capacitance is 55 pF
8. Using the equation t = RC, allowing five time constants to decay, and solving for R
   a. R = t / 5C = 635.8 ns / (5 x 55 pF)
   b. R = 2.3 kΩ

So, R must be less than 2.3 kΩ to allow the node to discharge.

Table 31. SPI Control Interface

7	BRDCST	Indicates a broadcast operation that is intended for all devices in the daisy chain. This is only valid for write operations since it would cause contention on the SDO pin during a read.
6	R/W	**Read/Write Bit.** 0 = Write operation. 1 = Read operation.
5	REG/RAM	**Register/RAM Access.** 0 = RAM access. 1 = Register access.
4	Reserved	
3:0	CID[3:0]	This field indicates the channel that is targeted by the operation. The 4-bit channel value is provided LSB first. The devices reside on the daisy chain such that device 0 is nearest to the controller, and device 15 is furthest down the SDI/SDU_THRU chain. (See Figure 26.) As the CID information propagates down the daisy chain, each channel decrements the CID by 1. The SDI nodes between devices will reflect a decrement of 2 per device since each device contains two channels. The device receiving a value of 0 in the CID field will respond to the SPI transaction. (See Figure 27.) If a broadcast to all devices connected to the chain is requested, the CID will not decrement. In this case, the same 8-bit or 16-bit data is presented to all channels regardless of the CID values.

4.17. Si3232 RAM and Register Space

The Si3232 is a highly-programmable telephone linecard solution that uses internal registers and RAM to program operational parameters and modes. The Register Summary and RAM Summary are compressed listings for single-entry quick reference. The Register Descriptions and RAM Descriptions give detailed information of each register or RAM location's bits.

All RAM locations are cleared upon a hardware reset. All RAM locations that are listed as "INIT" must be initialized to a meaningful value for proper functionality. Bit 4 of the MSTRSTAT register indicates the clearing process is finished. This bit should be checked before initializing the RAM space.

Accessing register and RAM space is performed through the SPI. Register space is accessed by using the standard three-byte access as described in the next section. Bit 5 of the control byte specifies register access when set to a 1. All register space is comprised of 8-bit data.

4.17.1. RAM Access by Pipeline

Ram space can be accessed by two different methods. One method is a pipeline method that employs a 4-byte access plus a RAM status check. The control byte for the pipeline method has bit 6 cleared to 0 to indicate a RAM access. The control byte is followed by the RAM address byte, then the two data bytes.

Reading RAM in the pipeline method requires "priming" the data. First, check for register RAMSTAT, bit 0, to indicate the previous access is complete and RAM is ready (0). Then, perform the 4-byte RAM access. The first read will yield unusable data. The data read on the subsequent read access is the data for the previous address read. A final address read yields the last previously-requested data. The RAM-ready information (RAMSTAT) must be read before every RAM access.

To write a RAM location, check for register RAMSTAT, bit 0, to indicate the previous access is complete and RAM is ready (0). Then, write the RAM address and data in the 4-byte method. A write to RAM location requires "priming" the data with subsequent accesses.

4.17.2. RAM Access by Register

An alternative method to access RAM space utilizes three registers in sequence and monitors RAMSTAT register, bit 0. These three registers are RAMADDR, RAMDATLO, and RAMDATHI.

To read a RAM location in the Si3232, check for register RAMSTAT (bit 0) to indicate the previous access is complete and RAM is ready (0). Then, write the RAM address to RAMADDR. Wait until RAMSTAT (bit 0) is a 1; then, the 16 bits of data can be read from the RAMDATLO and RAMDATHI registers.

To write a RAM location in the Si3232, check for register RAMSTAT (bit 0) to indicate the previous access is completed and RAM is ready (0); then, write the 16 bits of RAM data to the RAMDATLO, RAMDATHI. Finally, write the RAM address to the RAMADDR register.

4.17.3. Chip Select

For register or RAM space access, there are three ways to use chip select: byte length, 16-bit length, and access duration length. The byte length method releases chip select after every 8 bits of communication with the Si3232. The time between chip select assertions must be at least 220 ns.

The 16-bit length chip select method is similar to the byte length method except that 16-bits are communicated with the Si3232. This means that Si3232 communication consists of a control byte, address byte for one 16-bit access, and two data bytes for a second 16-bit access.

In a single data byte communication (control byte, address byte, data byte), the data byte should be loaded into either the high byte or both bytes of the second 16-bit access for a write. The 8-bit data exists in the high and low byte of a 16-bit access for a read. The time between chip select assertion must be at least 220 ns.

Access duration length allows chip select to be pulled low for the length of a number of Si3232 accesses. There are two very specific rules for this type of communication. One rule is that the SCLK must be of a frequency that is less than 1/2x220 ns (<2.25 MHz). The second rule is that access must be done in a 16-bit modulus. This 16-bit modulus follows the same rules as described above for 16-bit length access where 8-bit data is concerned.

4.17.4. Protected Register Bits

The Si3232 has protected register bits that are meant to retain the integrity of the Si3232 circuit in the event of unintentional software register access. To access the user-protected bits, write the following sequence of data bytes to register address 87 (0x57):

0x02

0x10

0x12

0x00

Following the modification of any protected bit, the same sequence should be immediately written to place these bits into their protected state.

Protected bits exist in registers SBIAS and THERM.

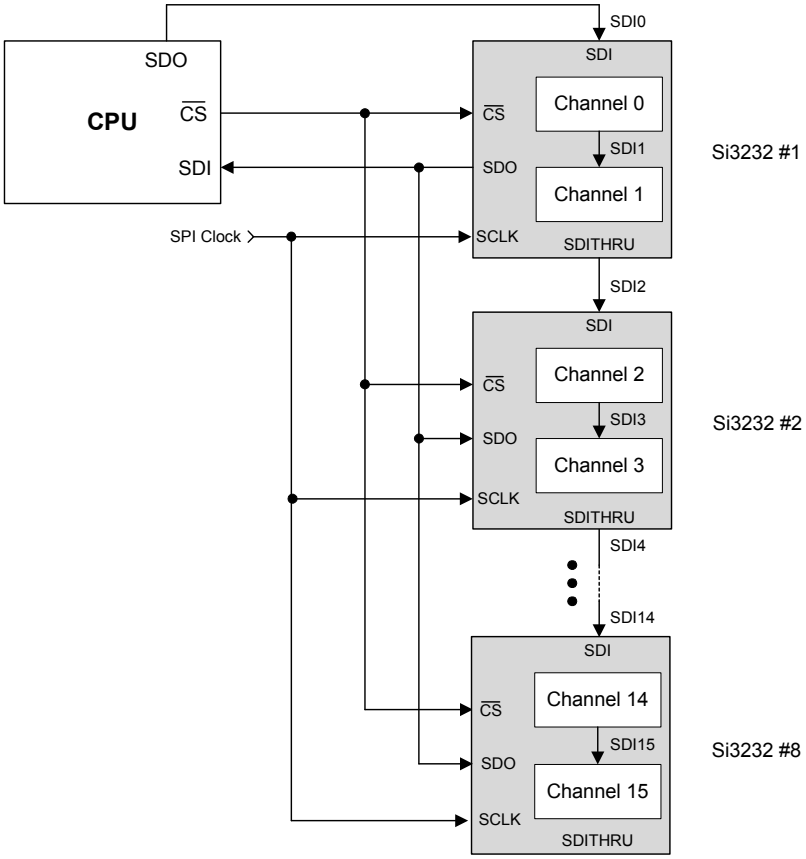

Figure 27. SPI Daisy Chain Control Architecture

In Figure 28, the CID field is 0. As this field is decremented (LSB to MSB order), the value decrements for each SDI down the line. The BRDCST, R/W, and REG/RAM bits remain unchanged as the control word passes through the entire chain. The odd SDIs are internal to the device and represent the SDI to SDI_THRU connection between channels of the same device. A unique CID is presented to each channel, and the channel receiving a CID value of 0 is the target of the operation (channel 0 in this case). The last line of Figure 28 illustrates that in broadcast mode, all bits are passed through the chain without permutation.

SPI Control Word

	BRDCST	R/W	REG/RAM	Reserved	CID[0]	CID[1]	CID[2]	CID[3]
SDI0	0	A	B	C	0	0	0	0
SDI1 (Internal)	0	A	B	C	1	1	1	1
SDI2	0	A	B	C	0	1	1	1
SDI3 (Internal)	0	A	B	C	1	0	1	1
				• • •				
SDI 0-15	0	A	B	C	0	1	0	0
SDI15	0	A	B	C	1	0	0	0
SDI0-15	1	A	B	C	D	E	F	G

Figure 28. Sample SPI Control Word to Address Channel 0

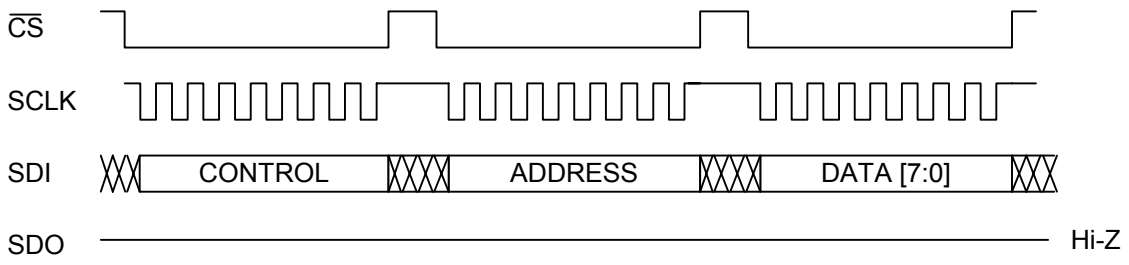

Figure 29. Register Write Operation via an 8-Bit SPI Port

Figures 29 and 30 illustrate WRITE and READ operations to registers via an 8-bit SPI controller. These operations are each performed as a 3-byte transfer. $\overline{CS}$ is asserted between each byte. It is necessary for $\overline{CS}$ to be asserted before the first falling edge of SCLK after the DATA byte to indicate to the state machine that only one byte should be transferred. The state of SDI is a “don’t care” during the DATA byte of a read operation.

Figures 31 and 32 illustrate WRITE and READ operation to registers via a 16-bit SPI controller. These operations require a 4-byte transfer arranged as two 16-bit words. The absence of $\overline{CS}$ going high after the eighth bit of data indicates to the SPI state machine that eight more SCLK pulses will follow to complete the operation. In the case of a WRITE operation, the last eight bits are ignored. In the case of a read operation, the 8-bit data value is repeated so that the data can be captured during the last half of a data transfer if so desired by the controller.

During register accesses, the CONTROL, ADDRESS, and DATA are captured in the SPI module. At the completion of the ADDRESS byte of a READ access, the contents of the addressed register are moved into the data register in the SPI. At the completion of the DATA byte of a WRITE access, the data is transferred from the SPI to the addressed register location.

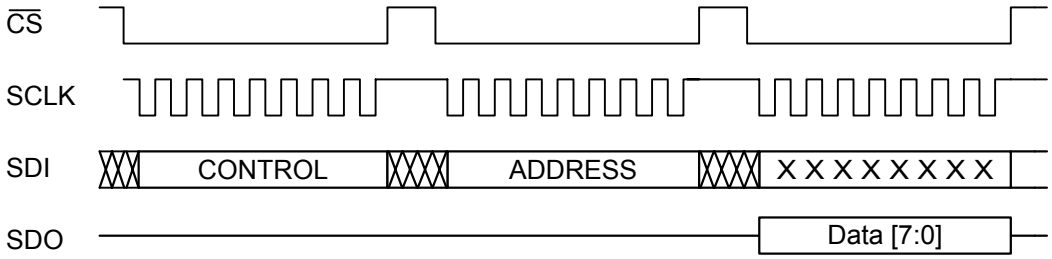

Figure 30. Register Read Operation via an 8-Bit SPI Port

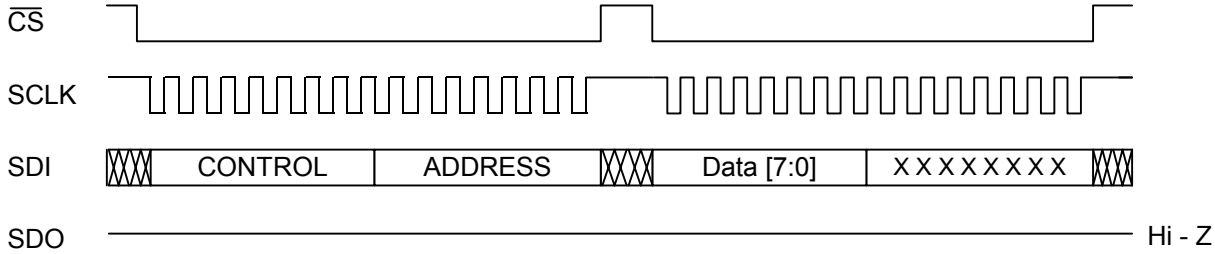

Figure 31. Register Write Operation via a 16-Bit SPI Port

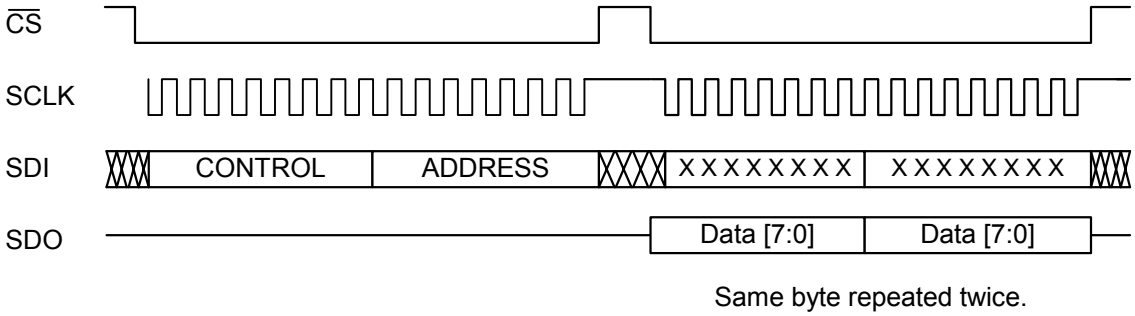

Figure 32. Register Read Operation via a 16-Bit SPI Port

Figures 33–36 illustrate the various cycles for accessing RAM address locations. RAM addresses are 16-bit entities; therefore the accesses always require four bytes.

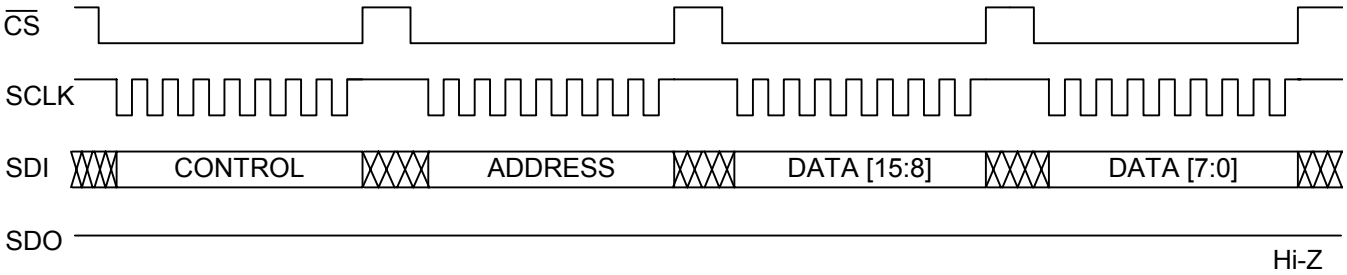

Figure 33. RAM Write Operation via an 8-Bit SPI Port

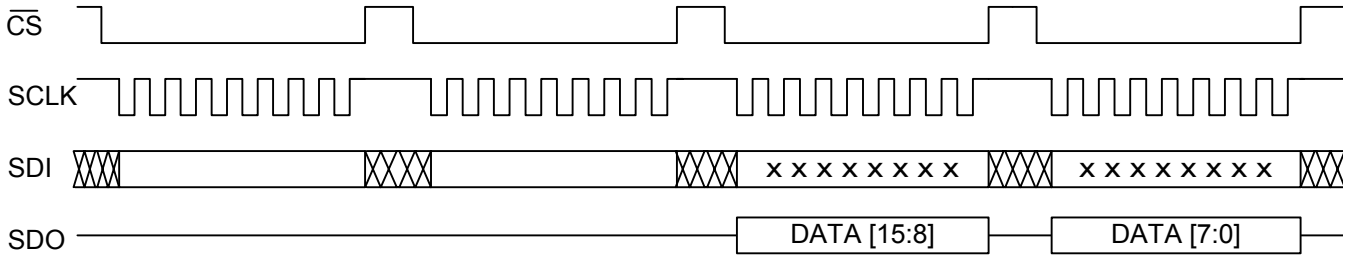

Figure 34. RAM Read Operation via an 8-Bit SPI Port

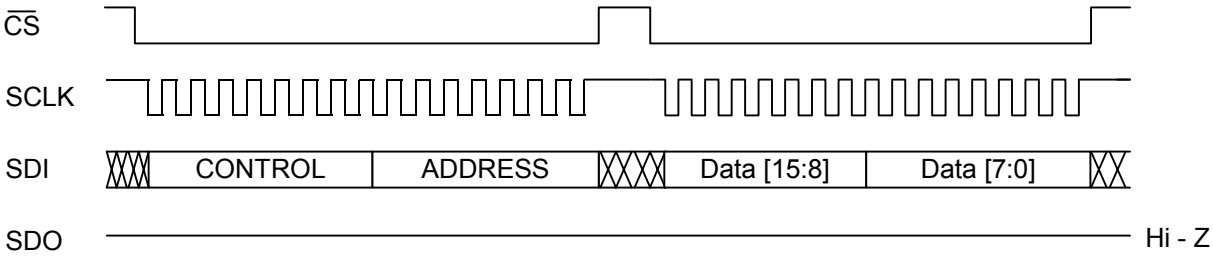

Figure 35. RAM Write Operation via a 16-Bit SPI Port

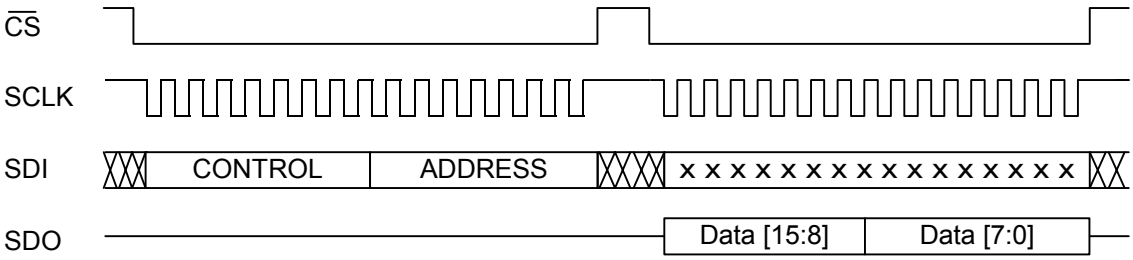

Figure 36. RAM Read Operation via a 16-Bit SPI Port

During RAM address accesses, CONTROL, ADDRESS, and DATA are captured in the SPI module. At the completion of the ADDRESS byte of a READ access, the contents of the channel-based data buffer are moved into the data register in the SPI for shifting out during the DATA portion of the SPI transfer. This is the data loaded into the data buffer in response to the previous RAM address read request. Therefore, there is a one-deep pipeline nature to RAM address READ operations. At the completion of the DATA portion of the READ cycle, the ADDRESS is transferred to the channel-based address buffer, and a RAM access request is logged for that channel. The RAMSTAT bit in each channel can be polled to monitor the status of RAM address accesses that are serviced twice per sample period at dedicated windows in the DSP algorithm.

There is also a RAM access interrupt in each channel which, when enabled, indicates that the pending RAM access request has been serviced. For a RAM WRITE access, the ADDRESS and DATA is transferred from the SPI registers to the address and data buffers in the appropriate channel. The RAM WRITE request is then logged. As for READ operations, the status of the pending request can be monitored by either polling the RAMSTAT bit for the channel or enabling the RAM access interrupt for the channel. By keeping the address and data buffers as well as the RAMSTAT register on a per-channel basis, RAM address accesses can be scheduled for both channels without interface.

4.18. System Testing

The Si3232 includes a complete suite of test tools that provide the user with the ability to test the functionality of the line card as well as detect fault conditions present on the TIP/RING pair. Using the included loopback test mode along with the signal generation and measurement tools, the user can typically eliminate the need for per-line test relays as well as centralized test equipment.

4.18.1. Loopback Test Mode

The codec loopback encompasses almost entirely the electronics of both the transmit and receive paths. The analog signal at the output of the system receive path DAC is fed back to the input of the transmit path by way of a feedback path. (See Figure 37.) The codec loopback mode is enabled by setting the DLM bit in the LBCON register. The impedance synthesis is disabled in this mode.

4.18.2. Line Test and Diagnostics

The Si3232 provides a variety of diagnostics tools that facilitate remote fault detection and parametric diagnostics on the TIP/RING pair as well as line card functionality verification. The Si3232 can generate dc line currents and voltages as well as measure all resulting line voltage and current levels on TIP, RING, or across the TIP/RING pair. When used in conjunction with an external codec that can generate discrete audio tones and discriminate certain audio frequency bands, the Si3232 can provide a vehicle to allow remote diagnostics on the subscriber loop and the line card. All parameters measured by the Si3232 are stored in registers for further processing by the codec and DSP, and all dc generation tools are register-programmable to allow a software-configurable remote diagnostic system.

The Si3232's signal generation and measurement tools are summarized in Table 32. The accompanying text describes the methodology that can be used to develop a fully-programmable test suite to facilitate remote diagnostics.

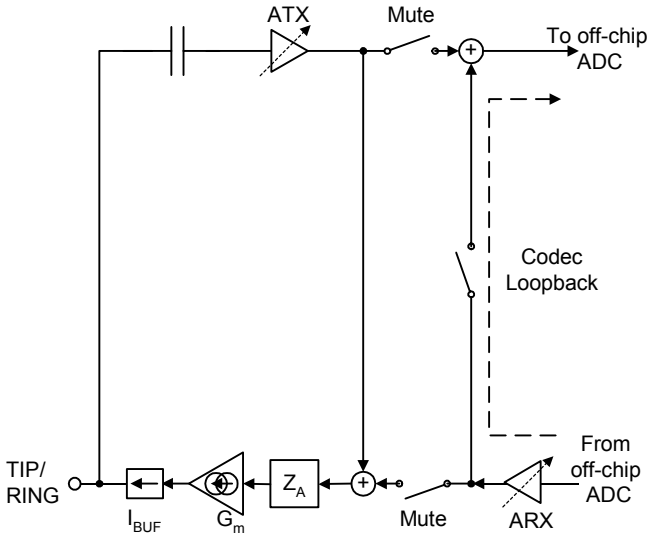

Figure 37. Digital Loopback Mode

Table 32. Summary of Signal Generation and Measurement Tools

Function	Range	Accuracy/ Resolution	Comments
Signal Generation Tools			
DC Current Generation	18 to 45 mA	0.875 mA	
DC Voltage Generation	0 to 63.3 V	1.005 V	
Ringing Signal Generation	4 to 15 V 16 to 100 Hz	±5% ±1%	
Measurement Tools			
8-Bit DC/Low Frequency Monitor A/D Converter	High Range: 0 to 160.173 V 0 to 101.09 mA	628 mV 396.4 µA	800 Hz update rate AC_{rms}, AC_{PK}, and dc post-processing blocks
	Low Range: 0 to 64.07V 0 to 50.54 mA	251 mV 198.2 µA	
AC Low-pass Filter	3 to 400 Hz		

4.18.3. Signal Generation Tools

- **TIP/RING dc signal generation.** The Si3232 linefeed D/A converter can program a constant current linefeed from 18–45 mA in 0.87 mA steps with a ±10% total accuracy. In addition, the open-circuit TIP/RING voltage can be programmed from 0 to 63 V in 1 V steps. The linefeed circuitry also has the ability to generate a controlled polarity reversal.
- Diagnostics mode ringing generation. The Si3232 can generate an internal low-level ringing signal to test for the presence of REN without causing the terminal equipment to ring audibly. This ringing signal can be either balance or unbalanced depending on the state of the RINGUNB bit of the RINGCON register and the amplitude of the battery supplies present.

4.18.4. Measurement Tools

- **8-Bit monitor A/D converter.** This 8-bit A/D converter monitors all dc and low-frequency voltage and current data from TIP to ground and RING to ground. Two additional values, TIP-RING and TIP+RING, are calculated and stored in on-chip registers for analyzing metallic and longitudinal effects. The A/D operates at an 800 Hz update rate to allow measurement bandwidth from dc to 400 Hz. A dual-range capability allows high-voltage/high-current measurement in the high range but can also measure lower voltages and currents with a tighter resolution.
- **AC_{rms}, AC_{PK} and dc filter blocks.** Several post-processing filter blocks are provided to allow the measured parameters to be processed according to the desired result.
- **SLIC diagnostics filter**

  Several post-processing filter blocks are provided for monitoring PEAK, dc, and ac characteristics of the Monitor A/D converter outputs as well as values derived from these outputs. Setting the SDIAG bit in the DIAG register enables the filters. There are separate filters for each channel, and their control is independent.

  The following parameters can be selected as inputs to the diagnostic block by setting the SDIAG_IN bits in the DIAG register to values 0–5 corresponding to the order below:

  - V_{TIP} = voltage on the TIP lead
  - $V_{RI\ NG}$ = voltage on the RING lead
  - $V_{LOOP} = V_{TIP} – V_{RING}$ = metallic (loop) voltage
  - $V_{LONG} = (V_{TIP}+V_{RING})/2$ = longitudinal voltage
  - $I_{LOOP} = I_{TIP} – I_{RING}$ = metallic (loop) current
  - $I_{LONG} = (I_{TIP}+I_{RING})/2$ = longitudinal current

The SLIC diagnostic capability consists of a peak detect block and two filter blocks, one for dc and one for ac. The topology is illustrated in Figure 38.

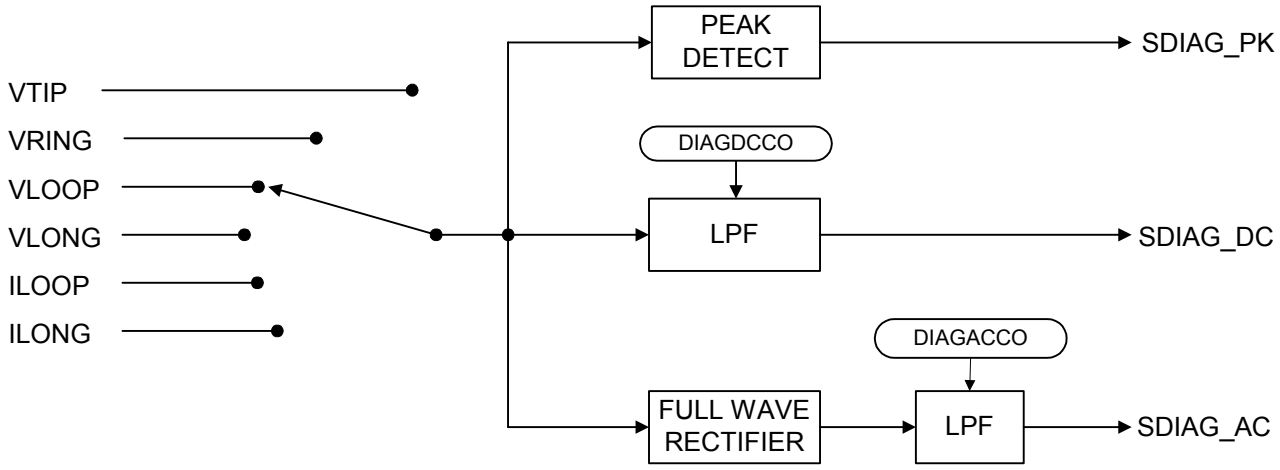

Figure 38. SLIC Diagnostic Filter Structure

The peak detect filter block will report the magnitude of the largest positive or negative value without sign. The dc filter block consists of a single pole IIR low-pass filter with a coefficient held in the DIAGDCCO indirect register. The filter output can be read from the DIAG_DC indirect register. The ac filter block consists of a full-wave rectifier followed by a single-pole IIR low-pass filter with a coefficient held in the DIAGACCO indirect register. The peak value can be read from the DIAGPK indirect register. The peak value is automatically cleared, and the filters are flushed on the 0-1 transition of the SDIAG bit as well as any time the input source is changed. The user can always write 0 to the DIAGPK register to get peak information for a specific time interval.

4.18.5. Diagnostics Capabilities

- **Foreign voltages test.** The Si3232 can detect the presence of foreign voltages according to GR-909 requirements of ac voltages > 10 V and dc voltages > 6 V from T-G or R-G. This test should only be performed once it has been determined that a hazardous voltage is not present on the line.
- **Resistive faults test.** Resistive fault conditions can be measured from T-G, R-G, or T-R for dc resistance per GR-909 specifications. If the dc resistance is < 150 kΩ, it is considered a resistive fault. This test can be performed by programming the Si3232 to generate a constant open-circuit voltage and measuring the resulting current. The resistance can then be calculated in the system DSP.
- **Receiver off-hook test.** This test can use a similar procedure as outlined in the Resistive Faults test above but is measured only across T-R. In addition, two measurements must be performed at different open-circuit voltages in order to verify the resistive linearity. If the calculated resistance has more than 15% nonlinearity between the two calculated points and the voltage/current origin, it is determined to be a resistive fault.
- **Ringers (REN) test.** This test verifies the presence of REN at the end of the TIP/RING pair per GR-909 specifications. It can be implemented by generating a 20 Hz ringing signal between 7 V_{rms} and 17 V_{rms} and measuring the 20 Hz ac current using the 8-bit monitor ADC. The resistance (REN) can then be calculated using the system DSP. The acceptable REN range is > 0.175 REN (<40 kΩ) or < 5 REN (> 1400 Ω). A returned value of <1400 Ω is determined to be a resistive fault from T-R, and a returned value > 40 kΩ is determined to be a loop with no handset attached.
- **AC line impedance measurement.** This test can determine the loop length across T-R. It can be implemented by sending out multiple discrete tones from the system DSP/codec, one at a time, and measuring the returned amplitude, with the system hybrid balance filter disabled. By calculating the voltage difference between the initial amplitude and the received amplitude and dividing the result by the audio current, the line impedance can then be calculated in the system processor.
- **Line capacitance measurement.** This test can be implemented in the same manner as the *ac line impedance measurement* test above, but the frequency band of interest is between 1 kHz and 3.4 kHz. Knowing the synthesized 2-wire impedance of the Si3232, the roll-off effect can be used to calculate the ac line capacitance. An external codec is required for this test.

- **Ringing voltage verification.** This test verifies that the desired ringing signal has been correctly applied to the TIP/RING pair and can be measured in the 8-bit monitor ADC, which senses low-frequency signals directly across T-R.
- **Power induction measurement.** This test can detect the presence of a power supply coupled onto the TIP/RING pair. It can be implemented by measuring the energy content at 50/60 Hz (normal induction) or at 100/120 Hz (rectified power induction). This is achieved by measuring the line voltage using a low-pass filter in the system DSP on the 8-bit monitor ADC while making certain there is no ringing signal present on the line.

5. 8-Bit Control Register Summary[1,2]

Any register not listed here is reserved and must not be written. Shaded registers are read only. All registers are assigned a default value during initialization and following a system reset. Only registers 0, 2, 3, and 14 are available until a PLL lock is established or during a clock failure.

(Ordered alphabetically by mnemonic.)

Reg Addr[3]	Mnemonic	Description	Bit 7	Bit 6	Bit 5	Bit 4	Bit 3	Bit 2	Bit 1	Bit 0	Type	R/W	Def. Hex
Audio													
21	AUDGAIN	Audio Gain Control	CMTXSEL	ATXMUTE		ATX		ARXMUTE	ARX[1:0]		Init	R/W	0x00
Calibration													
11	CALR1	Calibration Register 1	CAL		CALOFFR	CALOFFT	CALOFFRN	CALOFFTN	CALDIFG	CALCMG	Init	R/W	0x3F
12	CALR2	Calibration Register 2			CALLKGR	CALLKGT	CALMADC	CALDACO	CALADCO	CALCMBAL	Init	R/W	0x3F
Diagnostic Tools													
13	DIAG	Diagnostics Tool Enable	IQ2HR	IQ1HR	TSTRING	TXFILT	SDIAG	SDIAGIN[2:0]			Diag	R/W	
Chip ID													
0	ID	Chip ID		PARTNUM[2:0][4]			REV[3:0][4]				Init	R	0x—
Loop Current Limit													
10	ILIM	Loop Current Limit				ILIM[4:0]					Init	R/W	0x05
Interrupts													
14	IRQ0	Interrupt Status 0	CLKIRQ[4,6]	IRQ3B[4,6]	IRQ2B[4,6]	IRQ1B[4,6]		IRQ3A[4,6]	IRQ2A[4,6]	IRQ1A[4,6]	Oper	R	0x00
15	IRQ1	Interrupt Status 1	PULSTAS	PULSTIS	RINGTAS	RINGTIS					Oper	R/W	0x00
16	IRQ2	Interrupt Status 2			RAMIRS	DTMFS	VOCTRKS	LONGS	LOOPS	RTRIPS	Oper	R/W	0x00
17	IRQ3	Interrupt Status 3	CMBALS		PQ6S	PQ5S	PQ4S	PQ3S	PQ2S	PQ1S	Oper	R/W	0x00
18	IRQEN1	Interrupt Enable 1	PULSTAE	PULSTIE	RINGTAE	RINGTIE					Init	R/W	0x00
19	IRQEN2	Interrupt Enable 2			RAMIRE	DTMFE	VOCTRKE	LONGE	LOOPE	RTRIPE	Init	R/W	0x00
20	IRQEN3	Interrupt Enable 3	CMBALE		PQ6E	PQ5E	PQ4E	PQ3E	PQ2E	PQ1E	Init	R/W	0x00
Loopback Enable													
22	LBCON	Loopback Enable	DLM								Diag	R/W	0x00
Linefeed Control													
9	LCRRTP	Loop Closure/Ring Trip/ Ground Key Detection			CMH[4]	SPEED[4]	VOCTST[4]	LONGHI[4]	RTP[4]	LCR[4]	Oper	R	0x40
6	LINEFEED	Linefeed		LFS[2:0][4]				LF[2:0]			Oper	R/W	0x00
SPI													
2	MSTREN	Master Initialization Enable	PLLFLT	FSFLT	PCFLT						Init	R/W	0x00
3	MSTRSTAT	Master Initialization Status	PLLFAULT	FSFAULT	PCFAULT	SRCLR[4]	PLOCK[4]	FSDET[4]	FSVAL[4]	PCVAL[4]	Init	R/W	0x00
Pulse Metering													
28	PMCON	Pulse Metering Control	ENSYNC[4,7]			TAEN1[7]	TIEN1[7]	PULSE1[7]			Oper	R/W	0x00
30	PMTAHI	Pulse Metering Oscillator Active Timer— High Byte	PULSETA[15:8][7]								Init	R/W	0x00
29	PMTALO	Pulse Metering Oscillator Active Timer— Low Byte	PULSETA[7:0][7]								Init	R/W	0x00

Notes:
1. Any register not listed is reserved and must not be written. Default hex value is loaded to register following any RESET. Only registers ID, MSTREN, MSTRSTAT, and IRQ0 are valid while the PLL is not locked (MSTRSTAT[PLOCK]).
2. Reserved bit values are indeterminate.
3. Register address is in decimal.
4. Read only.
5. Protected bits.
6. Per-channel bit(s).
7. Si3220 only.

Reg Addr[3]	Mnemonic	Description	Bit 7	Bit 6	Bit 5	Bit 4	Bit 3	Bit 2	Bit 1	Bit 0	Type	R/W	Def. Hex
32	PMTIHI	Pulse Metering Oscillator Inactive Timer—High Byte	PULSETI[15:8][7]								Init	R/W	0x00
31	PMTILO	Pulse Metering Oscillator Inactive Timer—Low Byte	PULSETI[7:0][7]								Init	R/W	0x00
Polarity Reversal													
7	POLREV	Polarity Reversal Settings					POLREV[4]	VOCZERO	PREN	RAMP	Init	R/W	
RAM Access													
103	RAMADDR	RAM Address	RAMADDR[7:0]								Oper	R/W	0x00
102	RAMDATHI	RAM Data—High Byte	RAMDAT[15:8]								Oper	R/W	0x00
101	RAMDATLO	RAM Data—Low Byte	RAMDAT[7:0]								Oper	R/W	0x00
4	RAMSTAT	RAM Address Status								RAMSTAT[4]	Init	R	0x00
Soft Reset													
1	RESET	Soft Reset							RESETB	RESETA	Init	R/W	0x00
Ringing													
23	RINGCON	Ringing Configuration	ENSYNC[4]	RDACEN[4]	RINGUNB	TAEN	TIEN	RINGEN[4]	UNBPOLR	TRAP	Init	R/W	0x00
25	RINGTAHI	Ringing Oscillator Active Timer—High Byte	RINGTA[15:8]								Init	R/W	0x00
24	RINGTALO	Ringing Oscillator Active Timer—Low Byte	RINGTA[7:0]								Init	R/W	0x00
27	RINGTIHI	Ringing Oscillator Inactive Timer—High Byte	RINGTI[15:8]								Init	R/W	0x00
26	RINGTILO	Ringing Oscillator Inactive Timer—Low Byte	RINGTI[7:0]								Init	R/W	0x00
Relay Configuration													
5	RLYCON	Relay Driver and Battery Switching Configuration			BSEL[5]	RRAIL	RDOE	GPO			Diag	R/W	0x00
SLIC Bias Control													
8	SBIAS	SLIC Bias Control	STDBY[5]	SQLCH[5]	CAPB[5]	BIASEN[5]	OBIAS[1:0][5]		ABIAS[1:0][5]		Init	R/W	0xE0
Si3200 Thermometer													
72	THERM	Si3200 Thermometer	STAT[4]	SEL[5]							Oper	R/W	0x45
Impedance Synthesis Coefficients													
33	ZRS	Impedance Synthesis Analog Real Coeff					RS[3:0][6]				Init	R/W	0x00
34	ZZ	Impedance Synthesis Analog Complex Coeff	ZSDIS[6]	ZSOHT[6]	ZP[1:0][6]				ZZ[1:0][6]		Init	R/W	0x00

Notes:
1. Any register not listed is reserved and must not be written. Default hex value is loaded to register following any RESET. Only registers ID, MSTREN, MSTRSTAT, and IRQ0 are valid while the PLL is not locked (MSTRSTAT[PLOCK]).
2. Reserved bit values are indeterminate.
3. Register address is in decimal.
4. Read only.
5. Protected bits.
6. Per-channel bit(s).
7. Si3220 only.

6. 8-Bit Control Descriptions

AUDGAIN: Audio Gain Control (Register Address 21)

(Register type: Initialization)

	D7	D6	D5	D4	D3	D2	D1	D0
Name	CMTXSEL	ATXMUTE		ATX		ARXMUTE	ARX[1:0]	
Type	R/W	R/W		R/W		R/W	R/W	

Reset settings = 0x00

Bit	Name	Function
7	CMTXSEL	**Transmit Path Common Mode Select.** Selects common mode reference for transmit audio signal. 0 = VTXP/N pins will be referred to internal 1.5 V VCM level. 1 = VTXP/N pins will be referred to external common-mode level presented at the VCM pin.
6	ATXMUTE	**Analog Transmit Path Mute.** 0 = Transmit signal passed. 1 = Transmit signal muted.
5	Reserved	Read returns zero.
4	ATX	**Analog Transmit Path Attenuation Stage.** Selects analog transmit path attenuation. See "4.14. Audio Path Processing" on page 48. 0 = No attenuation. 1 = –3 dB attenuation.
3	Reserved	Read returns zero.
2	ARXMUTE	**Analog Receive Path Mute.** 0 = Receive signal passed. 1 = Receive signal muted.
1:0	ARX[1:0]	**Analog Receive Path Attenuation Stage.** Selects analog receive path attenuation. See “4.14. Audio Path Processing” . 00 = No attenuation. 01 = –3 dB attenuation. 10 = –6 dB attenuation. 11 = Reserved. Do not use.

CALR1: Calibration 1 (Register Address 11)

(Register type: Initialization)

Bit	D7	D6	D5	D4	D3	D2	D1	D0
Name	CAL		CALOFFR	CALOFFT	CALOFFRN	CALOFFTN	CALDIFG	CALCMG
Type	R/W		R/W	R/W	R/W	R/W	R/W	R/W

Reset settings = 0x3F

Bit	Name	Function
7	CAL	**Calibration Control/Status Bit.** Begins system calibration routine. 0 = Normal operation or calibration complete. 1 = Calibration in progress.
6	Reserved	Read returns zero.
5	CALOFFR	**RING Offset Calibration.** 0 = Normal operation or calibration complete. 1 = Calibration enabled or in progress.
4	CALOFFT	**TIP Offset Calibration.** 0 = Normal operation or calibration complete. 1 = Calibration enabled or in progress.
3	CALOFFRN	**IRINGN Offset Calibration.** 0 = Normal operation or calibration complete. 1 = Calibration enabled or in progress.
2	CALOFFTN	**ITIPN Offset Calibration.** 0 = Normal operation or calibration complete. 1 = Calibration enabled or in progress.
1	CALDIFG	**Differential DAC Gain Calibration.** 0 = Normal operation or calibration complete. 1 = Calibration enabled or in progress.
0	CALCMG	**Common Mode DAC Gain Calibration.** 0 = Normal operation or calibration complete. 1 = Calibration enabled or in progress.

CALR2: Calibration 2 (Register Address 12)

(Register type: Initialization)

Bit	D7	D6	D5	D4	D3	D2	D1	D0
Name			CALLKGR	CALLKGT	CALMADC	CALDACO	CALADCO	CALCMBAL
Type			R/W	R/W	R/W	R/W	R/W	R/W

Reset settings = 0x3F

Bit	Name	Function
7:6	Reserved	Read returns zero.
5	CALLKGR	**RING Leakage Calibration.** 0 = Normal operation or calibration complete. 1 = Calibration enabled or in progress.
4	CALLKGT	**TIP Leakage Calibration.** 0 = Normal operation or calibration complete. 1 = Calibration enabled or in progress.
3	CALMADC	**Monitor ADC Calibration.** 0 = Normal operation or calibration complete. 1 = Calibration enabled or in progress.
2	CALDACO	**DAC Offset Calibration.** Calibrates the audio DAC offset. 0 = Normal operation or calibration complete. 1 = Calibration enabled or in progress.
1	CALADCO	**ADC Offset Calibration.** Calibrates the audio ADC offset. 0 = Normal operation or calibration complete. 1 = Calibration enabled or in progress.
0	CALCMBAL	**Common Mode Balance Calibration.** Calibrates the ac longitudinal balance. 0 = Normal operation or calibration complete. 1 = Calibration enabled or in progress.

DIAG: Diagnostic Tools (Register Address 13)

(Register type: Diagnostics)

Bit	D7	D6	D5	D4	D3	D2	D1	D0
Name	IQ2HR	IQ1HR	TSTRING	TXFILT	SDIAG	SDIAGIN[2:0]		
Type	R/W	R/W	R/W	R/W	R/W	R/W		

Reset settings = 0x00

Bit	Name	Function
7	IQ2HR	**Monitor ADC IQ2 High-Resolution Enable.** Sets MADC to high-resolution range for IQ2 conversion. 0 = MADC not set to high resolution. 1 = MADC set to high resolution.
6	IQ1HR	**Monitor ADC IQ1 High-Resolution Enable.** Sets MADC to high-resolution range for IQ1 conversion. 0 = MADC not set to high resolution. 1 = MADC set to high resolution.
5	TSTRING	**Test Ringing Generator Enable.** Enables the capability of generating a low-level ringing signal for diagnostic purposes. 0 = Test-ringing generator disabled. 1 = Test-ringing generator enabled.
4	TXFILT	**Transmit Path Audio Diagnostics Filter Enable.** Enables the transmit path diagnostics filters. 0 = Transmit audio path diagnostics filters disabled. 1 = Transmit audio path diagnostics filters enabled.
3	SDIAG	**SLIC Diagnostics Filter Enable.** Enables the SLIC path diagnostics filters. 0 = SLIC diagnostics filters disabled. 1 = SLIC diagnostics filters enabled.
2:0	SDIAGIN[2:0]	**SLIC Diagnostics Filter Input.** Selects the input to the SLIC diagnostics filter for dc and low-frequency line parameters. 000 = TIP voltage. 001 = RING voltage. 010 = Loop voltage, $V_{TIP} – V_{RING}$. 011 = Longitudinal voltage, $(V_{TIP} + V_{RING})/2$. 100 = Loop (metallic) current. 101 = Longitudinal current.

ID: Chip Identification (Register Address 0)

(Register type: Initialization/single value instance for both channels)

Bit	D7	D6	D5	D4	D3	D2	D1	D0
Name		PARTNUM[2:0]			REV[3:0]			
Type	R				R			

Reset settings = 0xxx

Bit	Name	Function
7	Reserved	Read returns zero.
6:4	PARTNUM[2:0]	**Part Number Identification.** 000-010 = Reserved 011 = Si3232 100–111 = Reserved
3:0	REV[3:0]	**Revision Number Identification.** 0001 = Revision A 0010 = Revision B 0011 = Revision C 0100 = Revision D 0101 = Revision E 0110 = Revision F 0111 = Revision G

ILIM: Loop Current Limit (Register Address 10)

(Register type: Initialization)

Bit	D7	D6	D5	D4	D3	D2	D1	D0
Name				ILIM[4:0]				
Type	R/W							

Reset settings = 0x05

Bit	Name	Function
7:5	Reserved	Read returns zero.
4:0	ILIM[4:0]	**Loop Current Limit.** The value written to this register sets the constant loop current. The value may be set between 18 mA (0x00) and 45 mA (0x20) in 0.875 mA steps.

IRQ0: Interrupt Status 0 (Register Address 14)

(Register type: Operational/single value instance for both channels)

Bit	D7	D6	D5	D4	D3	D2	D1	D0
Name	CLKIRQ	IRQ3B	IRQ2B	IRQ1B		IRQ3A	IRQ2A	IRQ1A
Type	R	R	R	R		R	R	R

Reset settings = 0x00

Read this interrupt to indicate which interrupt status byte, from which channel, has a pending interrupt.

Bit	Name	Function
7	CLKIRQ	**Clock Failure Interrupt Pending.** 0 = No interrupt pending. 1 = Clock failure interrupt pending. Clock failure status indicated in MSTRSTAT register, bits 7:5.
6	IRQ3B	**Interrupt Pending.** 0 = No interrupt pending. 1 = Interrupt pending in interrupt status byte 3 (IRQ3) for channel B.
5	IRQ2B	**Interrupt Pending.** 0 = No interrupt pending. 1 = Interrupt pending in interrupt status byte 2 (IRQ2) for channel B.
4	IRQ1B	**Interrupt Pending.** 0 = No interrupt pending. 1 = Interrupt pending in interrupt status byte 1 (IRQ1) for channel B.
3	Reserved	Read returns zero.
2	IRQ3A	**Interrupt Pending.** 0 = No interrupt pending. 1 = Interrupt pending in interrupt status byte 3 (IRQ3) for channel A.
1	IRQ2A	**Interrupt Pending.** 0 = No interrupt pending. 1 = Interrupt pending in interrupt status byte 2 (IRQ2) for channel A.
0	IRQ1A	**Interrupt Pending.** 0 = No interrupt pending. 1 = Interrupt pending in interrupt status byte 1 (IRQ1) for channel A.

IRQ1: Interrupt Status 1 (Register Address 15)

(Register type: Operational/bits writable in GCI mode only)

Bit	D7	D6	D5	D4	D3	D2	D1	D0
Name	PULSTAS	PULSTIS	RINGTAS	RINGTIS				
Type	R/W	R/W	R/W	R/W				

Reset settings = 0x00

Bit	Name	Function
7	PULSTAS	**Pulse Metering Active Timer Interrupt Pending.** 0 = No interrupt pending. 1 = Interrupt pending.
6	PULSTIS	**Pulse Metering Inactive Timer Interrupt Pending.** 0 = No interrupt pending. 1 = Interrupt pending.
5	RINGTAS	**Ringing Active Timer Interrupt Pending.** 0 = No interrupt pending. 1 = Interrupt pending.
4	RINGTIS	**Ringing Inactive Timer Interrupt Pending.** 0 = No interrupt pending. 1 = Interrupt pending.
3:0	Reserved	Read returns zero.

IRQ2: Interrupt Status 2 (Register Address 16)

(Register type: Operational/bits writable in GCI mode only)

Bit	D7	D6	D5	D4	D3	D2	D1	D0
Name			RAMIRS	DTMFS	VOCTRKS	LONGS	LOOPS	RTRIPS
Type			R/W	R/W	R/W	R/W	R/W	R/W

Reset settings = 0x00

Bit	Name	Function
7:6	Reserved	Read returns zero.
5	RAMIRS	**RAM Access Interrupt Pending.** 0 = No interrupt pending. 1 = Interrupt pending.
4	DTMFS	**DTMF Tone Detect Interrupt Pending.** 0 = No interrupt pending. 1 = Interrupt pending.
3	VOCTRKS	**VOC Tracking Interrupt Pending.** 0 = No interrupt pending. 1 = Interrupt pending.
2	LONGS	**Ground Key Interrupt Pending.** 0 = No interrupt pending. 1 = Interrupt pending.
1	LOOPS	**Loop Closure Interrupt Pending.** 0 = No interrupt pending. 1 = Interrupt pending.
0	RTRIPS	**Ring Trip Interrupt Pending.** 0 = No interrupt pending. 1 = Interrupt pending.

IRQ3: Interrupt Status 3 (Register Address 17)

(Register type: Operational/bits writable in GCI mode only)

Bit	D7	D6	D5	D4	D3	D2	D1	D0
Name	CMBALS		PQ6S	PQ5S	PQ4S	PQ3S	PQ2S	PQ1S
Type	R/W		R/W	R/W	R/W	R/W	R/W	R/W

Reset settings = 0x00

Bit	Name	Function
7	CMBALS	**Common Mode Balance Interrupt Pending.** 0 = No interrupt pending. 1 = Interrupt pending.
6	Reserved	Read returns zero.
5	PQ6S	**Power Alarm Q6 Interrupt Pending.** 0 = No interrupt pending. 1 = Interrupt pending.
4	PQ5S	**Power Alarm Q5 Interrupt Pending.** 0 = No interrupt pending. 1 = Interrupt pending.
3	PQ4S	**Power Alarm Q4 Interrupt Pending.** 0 = No interrupt pending. 1 = Interrupt pending.
2	PQ3S	**Power Alarm Q3 Interrupt Pending.** 0 = No interrupt pending. 1 = Interrupt pending.
1	PQ2S	**Power Alarm Q2 Interrupt Pending.** 0 = No interrupt pending. 1 = Interrupt pending.
0	PQ1S	**Power Alarm Q1 Interrupt Pending.** 0 = No interrupt pending. 1 = Interrupt pending.

IRQEN1: Interrupt Enable 1 (Register Address 18)

(Register type: Initialization)

Bit	D7	D6	D5	D4	D3	D2	D1	D0
Name	PULSTAE	PULSTIE	RINGTAE	RINGTIE				
Type	R/W	R/W	R/W	R/W				

Reset settings = 0x00

Bit	Name	Function
7	PULSTAE	**Pulse Metering Active Timer Interrupt Enable.** 0 = Interrupt masked. 1 = Interrupt enabled.
6	PULSTIE	**Pulse Metering Inactive Timer Interrupt Enable.** 0 = Interrupt masked. 1 = Interrupt enabled.
5	RINGTAE	**Ringing Active Timer Interrupt Enable.** 0 = Interrupt masked. 1 = Interrupt enabled.
4	RINGTIE	**Ringing Inactive Timer Interrupt Enable.** 0 = Interrupt masked. 1 = Interrupt enabled.
3:0	Reserved	Read returns zero.

IRQEN2: Interrupt Enable 2 (Register Address 19)

(Register type: Initialization)

Bit	D7	D6	D5	D4	D3	D2	D1	D0
Name			RAMIRE	DTMFE	VOCTRKE	LONGE	LOOPE	RTRIPE
Type			R/W	R/W	R/W	R/W	R/W	R/W

Reset settings = 0x00

Bit	Name	Function
7:6	Reserved	Read returns zero.
5	RAMIRE	**RAM Access Interrupt Enable.** 0 = Interrupt masked. 1 = Interrupt enabled.
4	DTMFE	**DTMF Tone Detect Interrupt Enable.** 0 = Interrupt masked. 1 = Interrupt enabled.
3	VOCTRKE	**VOC Tracking Interrupt Enable.** 0 = Interrupt masked. 1 = Interrupt enabled.
2	LONGE	**Ground Key Interrupt Enable.** 0 = Interrupt masked. 1 = Interrupt enabled.
1	LOOPE	**Loop Closure Interrupt Enable.** 0 = Interrupt masked. 1 = Interrupt enabled.
0	RTRIPE	**Ring Trip Interrupt Enable.** 0 = Interrupt masked. 1 = Interrupt enabled.

IRQEN3: Interrupt Enable 3 (Register Address 20)

(Register type: Initialization)

Bit	D7	D6	D5	D4	D3	D2	D1	D0
Name	CMBALE		PQ6E	PQ5E	PQ4E	PQ3E	PQ2E	PQ1E
Type	R/W		R/W	R/W	R/W	R/W	R/W	R/W

Reset settings = 0x00

Bit	Name	Function
7	CMBALE	**Common Mode Balance Interrupt Enable.** 0 = Interrupt masked. 1 = Interrupt enabled.
6	Reserved	Read returns zero.
5	PQ6E	**Power Alarm Q6 Interrupt Enable.** 0 = Interrupt masked. 1 = Interrupt enabled.
4	PQ5E	**Power Alarm Q5 Interrupt Enable.** 0 = Interrupt masked. 1 = Interrupt enabled.
3	PQ4E	**Power Alarm Q4 Interrupt Enable.** 0 = Interrupt masked. 1 = Interrupt enabled.
2	PQ3E	**Power Alarm Q3 Interrupt Enable.** 0 = Interrupt masked. 1 = Interrupt enabled.
1	PQ2E	**Power Alarm Q2 Interrupt Enable.** 0 = Interrupt masked. 1 = Interrupt enabled.
0	PQ1E	**Power Alarm Q1 Interrupt Enable.** 0 = Interrupt masked. 1 = Interrupt enabled.

LBCON: Loopback Enable (Register Address 22)

(Register type: Diagnostic)

Bit	D7	D6	D5	D4	D3	D2	D1	D0
Name	DLM							
Type	R/W							

Reset settings = 0x00

Bit	Name	Function
7	DLM	**Codec Loopback Mode Enable.** 0 = Codec loopback mode disabled. 1 = Codec loopback mode enabled.
6:0	Reserved	Read returns zero.

LCRRTP: Loop Closure/Ring Trip/Ground Key Detection (Register Address 9)

(Register type: Operational)

Bit	D7	D6	D5	D4	D3	D2	D1	D0
Name			CMH	SPEED	VOCTST	LONGHI	RTP	LCR
Type			R	R	R	R	R	R

Reset settings = 0x40

Bit	Name	Function
7:6	Reserved	Read returns zero.
5	CMH	**Common Mode High Threshold.** Indicates that common-mode threshold has been exceeded. 0 = Common-mode threshold not exceeded. 1 = Common-mode threshold exceeded.
4	SPEED	**Speedup Mode Enable.** 0 = Speedup disabled. 1 = Automatic speedup.
3	VOCTST	**V_{OC} Tracking Status.** Indicates that battery voltage has dropped and V_{OC} tracking is enabled. 0 = V_{OC} tracking threshold not exceeded, $V_{TR\ on\text{-}hook} = V_{OC}$. 1 = V_{OC} tracking threshold exceeded, $V_{TR\ on\text{-}hook} = V_{OCtrack}$.
2	LONGHI	**Ground Key Detect Flag.** 0 = Ground key event has not been detected. 1 = Ground key event has been detected.
1	RTP	**Ring Trip Detect Flag.** 0 = Ring trip event has not been detected. 1 = Ring trip event has been detected.
0	LCR	**Loop Closure Detect Flag.** 0 = Loop closure event has not been detected. 1 = Loop closure event has been detected.
Note: Detect bits are not sticky bits. Refer to interrupt status for interrupt bit history indication.		

LINEFEED: Linefeed Control (Register Address 6)

(Register type: Operational)

Bit	D7	D6	D5	D4	D3	D2	D1	D0
Name		LFS[2:0]				LF[2:0]		
Type	R				R/W			

Reset settings = 0x00

Bit	Name	Function
7	Reserved	Read returns zero.
6:4	LFS[2:0]	**Linefeed Shadow.** This register reflects the actual realtime linefeed status. Automatic operations may cause actual linefeed state transitions regardless of the Linefeed register settings (e.g., when the Linefeed register is in the ringing state, the Linefeed Shadow register will reflect the ringing state during ringing bursts and the OHT state during silent periods between ringing bursts). 000 = Open 001 = Forward Active 010 = Forward On-hook Transmission (OHT) 011 = TIP Open 100 = Ringing 101 = Reverse Active 110 = Reverse On-hook Transmission 111 = RING Open
3	Reserved	Read returns zero.
2:0	LF[2:0]	**Linefeed.** Writing to this register sets the linefeed state. 000 = Open 001 = Forward Active 010 = Forward On-hook Transmission (OHT) 011 = TIP Open 100 = Ringing 101 = Reverse Active 110 = Reverse On-hook Transmission 111 = RING Open

MSTREN: Master Initialization Enable (Register Address 2)

(Register type: Initialization/single value instance for both channels)

Bit	D7	D6	D5	D4	D3	D2	D1	D0
Name	PLLFLT	FSFLT	PCFLT					
Type	R/W	R/W	R/W					

Reset settings = 0x00

Bit	Name	Function
7	PLLFLT	**PLL Lock Fault Enable.** 0 = PLLFAULT interrupt bit is enabled. 1 = PLLFAULT interrupt bit is disabled.
6	FSFLT	**FSYNC Clock Fault Enable.** 0 = FSYNC interrupt bit is enabled. 1 = FSYNC interrupt bit is disabled.
5	PCFLT	**PCM Clock Fault Enable.** 0 = PCM interrupt bit is enabled. 1 = PCM interrupt bit is disabled.
4:0	Reserved	Read returns zero.

MSTRSTAT: Master Initialization Status (Register Address 3)

(Register type: Initialization/single value instance for both channels)

Bit	D7	D6	D5	D4	D3	D2	D1	D0
Name	PLLFAULT	FSFAULT	PCFAULT	SRCLR	PLOCK	FSDET	FSVAL	PCVAL
Type	R/W	R/W	R/W	R	R	R	R	R

Reset settings = 0x00

Bit	Name	Function
7	PLLFAULT	**PLL Lock Fault Status.** This bit is set when the PLOCK bit transitions low, indicating loss of PLL lock. Writing 1 to this bit clears the status. 0 = PLL lock is valid. 1 = PLL has lost lock.
6	FSFAULT	**FSYNC Clock Fault Status.** This bit is set when the FSVAL and FSDET bits transition low, indicating loss of valid FSYNC signal or invalid FSYNC-to-PCLK ratio. Writing 1 to this bit clears the status. 0 = Correct FSYNC to PCLK ration present. 1 = FSYNC to PCLK ratio lost.
5	PCFAULT	**PCM Clock Fault Status.** This bit will be set when the PCVAL bit transitions low. Writing 1 to this bit clears the status. 0 = Valid PCLK signal present. 1 = No valid PCLK signal present.
4	SRCLR	**SRAM Clear Status Detect.** 0 = SRAM clear operation not initiated or in progress. 1 = SRAM clear operation has completed.
3	PLOCK	**PLL Lock Detect.** Indicates the internal PLL is locked relative to FSYNC. 0 = PLL has lost lock relative to FSYNC. 1 = PLL locked relative to FSYNC.
2	FSDET	**FSYNC to PCLK Ratio Detect.** Indicates a valid FSYNC to PCLK ratio has been detected. 0 = Invalid FSYNC to PCLK ratio detected. 1 = Correct FSYNC to PCLK ratio present.
1	FSVAL	**FSYNC Clock Valid.** Indicates that a minimum valid FSYNC signal is present. 0 = FSYNC signal is not valid. 1 = FSYNC signal is present.
0	PCVAL	**PCM Clock Valid.** Indicates that a minimum valid PCLK signal is present. 0 = PCLK signal is $\leq$ 128 kHz. 1 = PCLK signal is $\geq$ 128 kHz.

PMCON: Pulse Metering Control (Register Address 28)

(Register type: Operational)

Bit	D7	D6	D5	D4	D3	D2	D1	D0
Name	ENSYNC			TAEN1	TIEN1	PULSE1		
Type	R			R/W	R/W	R/W		

Reset settings = 0x00

Bit	Name	Function
7	ENSYNC	**Pulse Metering Waveform Present Flag.** Indicates a pulse-metering waveform is present. 0 = No pulse metering waveform present. 1 = Pulse metering waveform present.
6:5	Reserved	Read returns zero.
4	TAEN1	**Pulse Metering Active Timer Enable.** 0 = Timer disabled. 1 = Timer enabled.
3	TIEN1	**Pulse Metering Inactive Timer Enable.** 0 = Timer disabled. 1 = Timer enabled.
2	PULSE1	**Pulse Metering Enable.** 0 = Pulse metering disabled. 1 = Pulse metering enabled.
1:0	Reserved	Read returns zero.

PMTAHI: Pulse Metering Oscillator Active Timer—High Byte (Register Address 30)

(Register type: Initialization)

Bit	D7	D6	D5	D4	D3	D2	D1	D0
Name	PULSETA[15:8]							
Type	R/W							

Reset settings = 0x00

Bit	Name	Function
7:0	PULSETA[15:8]	**Pulse Metering Oscillator Active Timer.** This register contains the upper 8 bits of the pulse metering oscillator active timer. Register 29 contains the lower 8 bits of this value.

PMTALO: Pulse Metering Oscillator Active Timer—Low Byte (Register Address 29)

(Register type: Initialization)

Bit	D7	D6	D5	D4	D3	D2	D1	D0
Name	PULSETA[7:0]							
Type	R/W							

Reset settings = 0x00

Bit	Name	Function
7:0	PULSETA[7:0]	**Pulse Metering Oscillator Active Timer.** This register contains the lower 8 bits of the pulse-metering oscillator active timer. Register 30 contains the upper 8 bits of this value. 1.25 µs/LSB.

PMTIHI: Pulse Metering Oscillator Inactive Timer—High Byte (Register Address 32)

(Register type: Initialization)

Bit	D7	D6	D5	D4	D3	D2	D1	D0
Name	PULSETI[15:8]							
Type	R/W							

Reset settings = 0x00

Bit	Name	Function
7:0	PULSETI[15:8]	**Pulse Metering Oscillator Inactive Timer.** This register contains the upper 8 bits of the pulse-metering oscillator inactive timer. Register 29 contains the lower 8 bits of this value.

PMTILO: Pulse Metering Oscillator Inactive Timer—Low Byte (Register Address 31)

(Register type: Initialization)

Bit	D7	D6	D5	D4	D3	D2	D1	D0
Name	PULSETI[7:0]							
Type	R/W							

Reset settings = 0x00

Bit	Name	Function
7:0	PULSETI[7:0]	**Pulse Metering Oscillator Inactive Timer.** This register contains the lower 8 bits of the pulse-metering oscillator inactive timer. Register 30 contains the upper 8 bits of this value. 1.25 µs/LSB.

POLREV: Polarity Reversal Settings (Register Address 7)

(Register type: Initialization)

Bit	D7	D6	D5	D4	D3	D2	D1	D0
Name					POLREV	VOCZERO	PREN	RAMP
Type					R	R/W	R/W	R/W

Reset settings = 0x00

Bit	Name	Function
7:4	Reserved	Read returns zero.
3	POLREV	**Polarity Reversal Status.** 0 = Forward polarity. 1 = Reverse polarity.
2	VOCZERO	**Wink Function Control.** Enables a wink function by decrementing the open circuit voltage to zero. 0 = Maintain current V_{OC} value. 1 = Decrement V_{OC} voltage to 0 V.
1	PREN	**Smooth Polarity Reversal Enable.** 0 = Disabled. 1 = Enabled.
0	RAMP	**Smooth Polarity Reversal Ramp Rate.** 0 = 1 V/1.25 ms ramp rate. 1 = 2 V/1.25 ms ramp rate.

RAMADDR: RAM Address (Register Address 103)

(Register type: Operational/single value instance for both channels)

Bit	D7	D6	D5	D4	D3	D2	D1	D0
Name	RAMADDR[7:0]							
Type	R/W							

Reset settings = 0x00

Bit	Name	Function
7:0	RAMADDR[7:0]	**RAM Data—Low Byte.** A write to RAMDAT followed by a write to RAMADDR places the contents of RAMDAT into a RAM location specified by the RAMADDR at the next memory update (WRITE operation). Writing RAMADDR loads the data stored in RAMADDR into RAMDAT only at the next memory update (READ operation).

RAMDATHI: RAM Data—High Byte (Register Address 102)

(Register type: Operational/single value instance for both channels)

Bit	D7	D6	D5	D4	D3	D2	D1	D0
Name	RAMDAT[15:8]							
Type	R/W							

Reset settings = 0x00

Bit	Name	Function
7:0	RAMDAT[15:8]	**RAM Data—High Byte.** A write to RAMDAT followed by a write to RAMADDR places the contents of RAMDAT into a RAM location specified by the RAMADDR at the next memory update (WRITE operation). Writing RAMADDR loads the data stored in RAMADDR into RAMDAT only at the next memory update (READ operation).

RAMDATLO: RAM Data—Low Byte (Register Address 101)

(Register type: Operational/single value instance for both channels)

Bit	D7	D6	D5	D4	D3	D2	D1	D0
Name	RAMDAT[7:0]							
Type	R/W							

Reset settings = 0x00

Bit	Name	Function
7:0	RAMDAT[15:8]	**RAM Data—Low Byte.** A write to RAMDAT followed by a write to RAMADDR places the contents of RAMDAT into a RAM location specified by the RAMADDR at the next memory update (WRITE operation). Writing RAMADDR loads the data stored in RAMADDR only into RAMDAT at the next memory update (READ operation).

RAMSTAT: RAM Address Status (Register Address 4)

(Register type: Operational)

Bit	D7	D6	D5	D4	D3	D2	D1	D0
Name								RAMSTAT
Type								R

Reset settings = 0x00

Bit	Name	Function
7:1	Reserved	Read returns zero.
0	RAMSTAT	**RAM Address Status.** 0 = RAM ready for access. 1 = RAM access pending internally (busy).

RESET: Soft Reset (Register Address 1)

(Register type: Initialization)

Bit	D7	D6	D5	D4	D3	D2	D1	D0
Name							RESETB	RESETA
Type							R/W	R/W

Reset settings = 0x00

Bit	Name	Function
7:2	Reserved	Read returns zero.
1	RESETB	**Soft Reset, Channel B.** 0 = Normal operation. 1 = Initiate soft reset to Channel B.
0	RESETA	**Soft Reset, Channel A.** 0 = Normal operation. 1 = Initiate soft reset to Channel A.
Note: Soft reset set to a single channel of a given device causes all register space to reset to default values for that channel. Soft reset set to both channels of a given device causes a hardware reset including PLL reinitialization and RAM clear.		

RINGCON: Ringing Configuration (Register Address 23)

(Register type: Initialization)

Bit	D7	D6	D5	D4	D3	D2	D1	D0
Name	ENSYNC	RDACEN	RINGUNB	TAEN	TIEN	RINGEN	UNBPOLR	TRAP
Type	R	R	R/W	R/W	R/W	R	R/W	R/W

Reset settings = 0x00

Bit	Name	Function
7	ENSYNC	**Ringing Waveform Present Flag.** 0 = No ringing waveform present. 1 = Ringing waveform present.
6	RDACEN	**Ringing Waveform Sent to Differential DAC.** 0 = Ringing waveform not sent to differential DAC. 1 = Ringing waveform set to differential DAC.
5	RINGUNB	**Unbalanced Ringing Enable.** Enables internal unbalanced ringing generation. 0 = Unbalanced ringing not enabled. 1 = Unbalanced ringing enabled.
4	TAEN	**Ringing Active Timer Enable.** 0 = Ringing active timer disabled. 1 = Ringing active timer enabled.
3	TIEN	**Ringing Inactive Timer Enable.** 0 = Ringing inactive timer disabled. 1 = Ringing inactive timer enabled.
2	RINGEN	**Ringing Oscillator Enable Monitor.** This bit will toggle when the ringing oscillator is enabled and disabled. 0 = Ringing oscillator is disabled. 1 = Ringing oscillator is enabled.
1	UNBPOLR	**Reverse Polarity Unbalanced Ringing Select.** The RINGOF RAM location must be modified from its normal ringing polarity setting. Refer to “4.7. Internal Unbalanced Ringing” for details. 0 = Normal polarity ringing. 1 = Reverse polarity ringing.
0	TRAP	**Ringing Waveform Selection.** 0 = Sinusoid waveform. 1 = Trapezoid waveform.

RINGTAHI: Ringing Oscillator Active Timer—High Byte (Register Address 25)

(Register type: Initialization)

Bit	D7	D6	D5	D4	D3	D2	D1	D0
Name	RINGTA[15:8]							
Type	R/W							

Reset settings = 0x00

Bit	Name	Function
7:0	RINGTA[15:8]	**Ringing Oscillator Active Timer.** This register contains the upper 8 bits of the ringing oscillator active timer (the on-time of the ringing burst). Register 24 contains the upper 8 bits of this value.

RINGTALO: Ringing Oscillator Active Timer—Low Byte (Register Address 24)

(Register type: Initialization)

Bit	D7	D6	D5	D4	D3	D2	D1	D0
Name	RINGTA[7:0]							
Type	R/W							

Reset settings = 0x00

Bit	Name	Function
7:0	RINGTA[7:0]	**Ringing Oscillator Active Timer.** This register contains the lower 8 bits of the ringing oscillator active timer (the on-time of the ringing burst). Register 25 contains the upper 8 bits of this value. 1.25 µs/LSB.

RINGTIHI: Ringing Oscillator Inactive Timer—High Byte (Register Address 27)

(Register type: Initialization)

Bit	D7	D6	D5	D4	D3	D2	D1	D0
Name	RINGTI[15:8]							
Type	R/W							

Reset settings = 0x00

Bit	Name	Function
7:0	RINGTI[15:8]	**Ringing Oscillator Inactive Timer.** This register contains the upper 8 bits of the ringing oscillator inactive timer (the silent period between ringing bursts). Register 26 contains the upper 8 bits of this value.

RINGTILO: Ringing Oscillator Inactive Timer—Low Byte (Register Address 26)

(Register type: Initialization)

Bit	D7	D6	D5	D4	D3	D2	D1	D0
Name	RINGTI[7:0]							
Type	R/W							

Reset settings = 0x00

Bit	Name	Function
7:0	RINGTI[7:0]	**Ringing Oscillator Inactive Timer.** This register contains the lower 8 bits of the ringing oscillator inactive timer (the silent time between ringing bursts). Register 27 contains the upper 8 bits of this value. 1.25 µs/LSB.

RLYCON: Relay Driver and Battery Switching Configuration (Register Address 5)

(Register type: Diagnostic)

Bit	D7	D6	D5	D4	D3	D2	D1	D0
Name			BSEL	RRAIL	RDOE	GPO		
Type			R	R/W	R/W	R/W		

Reset settings = 0xA3

Bit	Name	Function
7:6	Reserved	Read returns 10 binary.
5	BSEL	**Battery Select Indicator.** 0 = BATSEL pin is output low. (Si3200 internal battery switch open). 1 = BATSEL pin is output high. (Si3200 internal battery switch closed).
4	RRAIL	**Additional Ringing Rail Present (Third Battery).** 0 = Ringing rail not present. 1 = Ringing rail present. For Si3220, RRD/GPO toggles with LINEFEED ringing cadence.
3	RDOE	**Relay Driver Output Enable.** 0 = Disabled. 1 = Enabled.
2	GPO	**General Purpose Output.** 0 = GPO output low. 1 = GPO output high.
1:0	Reserved	Read returns zero.

SBIAS: SLIC Bias Control (Register Address 8)

(Register type: Initialization/protected register bits)

Bit	D7	D6	D5	D4	D3	D2	D1	D0
Name	STDBY	SQLCH	CAPB	BIASEN	OBIAS[1:0]		ABIAS[1:0]	
Type	R/W–P	R/W–P	R/W–P	R/W–P	R/W–P		R/W–P	

Reset settings = 0xE0

Bit	Name	Function
7	STDBY	**Low-power Standby Status.** Writing to this bit causes temporary manual control of this bit until a subsequent on-hook or off-hook transition. 0 = low-power mode off (i.e. Active off-hook). 1 = low-power mode on (i.e. Active on-hook).
6	SQLCH	**Audio Squelch Control.** Indicates squelch of audio during the setting time set by the SPEEDUP RAM coefficient. Writing to this bit causes temporary manual override until a speedup event occurs. 0 = Squelch off. 1 = Squelch on.
5	CAPB	**Audio Filter Capacitor Bypass.** Indicates filter capacitor pass during the setting time set by the SPEEDUP RAM coefficient. Writing to this bit causes temporary manual override until a speedup event occurs. 0 = Capacitors not bypassed. 1 = Capacitors bypassed.
4	BIASEN	**SLIC Bias Enable.** Writing to this bit causes temporary manual control of SLIC bias until a subsequent on-hook or off-hook state. 0 = SLIC bias off (i.e. Active on-hook). 1 = = SLIC bias on (i.e. Active off-hook).
3:2	OBIAS[1:0]	**SLIC Bias Level, On-Hook Transmission State.** DC bias current flowing in the SLIC circuit during on-hook transmission state. Increasing this value increases the ability of the SLIC to withstand longitudinal current artifacts. 00 = 4 mA per lead. 01 = 8 mA per lead. 10 = 12 mA per lead. 11 = 16 mA per lead.
1:0	ABIAS[1:0]	**SLIC Bias Level, Active State.** DC bias current flowing in the SLIC circuit during the active off-hook state. Increasing this value increases the ability of the SLIC to withstand longitudinal current artifacts. 00 = 4 mA per lead. 01 = 8 mA per lead. 10 = 12 mA per lead. 11 = 16 mA per lead.
Note: Bit type “P” = user-protected bits. Refer to the protected register bit section in the text of this application note.		

THERM: Si3200 Thermometer (Register Address 72)

(Register type: Diagnostic/single value instance for both channels)

Bit	D7	D6	D5	D4	D3	D2	D1	D0
Name	STAT	SEL						
Type	R	R/W						

Reset settings = 0x00

Bit	Name	Function
7	STAT	**Si3200 Thermometer Status.** Reads whether the Si3200 has shut down due to an over-temperature event. 0 = Si3200 operating within normal operating temperature range. 1 = Si3200 has exceeded maximum operating temperature.
6	SEL	Si3200 Power Sensing Mode Select (Protected Register Bit). 0 = Transistor power sum used for power sensing (PSUM vs. threshold in PTH12) 1 = Si3200 therm diode used for power sensing.
5:0	Reserved	Read returns zero.

ZRS: Impedance Synthesis—Analog Real Coefficient (Register Address 33)

(Register type: Initialization/single value instance for both channels)

Bit	D7	D6	D5	D4	D3	D2	D1	D0
Name					RS[3:0]			
Type	R/W							

Reset settings = 0x00

Bit	Name	Function
7:4	Reserved	Read returns zero.
3:0	RS[3:0]	**Impedance Synthesis Analog Real Coefficient.** Refer to coefficient generation program.

ZZ: Impedance Synthesis—Analog Complex Coefficient (Register Address 34)

(Register type: Initialization/single value instance for both channels)

Bit	D7	D6	D5	D4	D3	D2	D1	D0
Name	ZSDIS	ZSOHT	ZP[1:0]				ZZ[1:0]	
Type	R/W	R/W	R/W				R/W	

Reset settings = 0x00

Bit	Name	Function
7	ZSDIS	**Analog Impedance Synthesis Coefficient Disable.** Enables/disables RS, ZSOHT, ZP, and ZZ coefficients. 0 = Analog Z_{SYNTH} coefficients enabled. 1 = Analog Z_{SYNTH} coefficients disabled.
6	ZSOHT	**Analog Impedance Synthesis Complex Coefficients.** Refer to coefficient generation program.
5:4	ZP[1:0]	
3:2	Reserved	
1:0	ZZ[1:0]	

7. 16-Bit RAM Address Summary[1]

All internal 16-bit RAM addresses can be assigned unique values for each SLIC channel and are accessed in a similar manner as the 8-bit control registers except that the data are twice as long. In addition, one additional READ cycle is required during READ operations to accommodate the one-deep pipeline architecture. (See "4.16. SPI Control Interface" on page 50 for more details). All internal RAM addresses are assigned a default value of zero during initialization and following a system reset. Unless otherwise noted, all RAM addresses use a 2s complement, MSB first data format (ordered alphabetically by mnemonic).

RAM Addr	Mnemonic	Description	Bit 15	Bit 14	Bit 13	Bit 12	Bit 11	Bit 10	Bit 9	Bit 8	Bit 7	Bit 6	Bit 5	Bit 4	Bit 3	Bit 2	Bit 1	Bit 0	Type	Ex. Hex	Ex. Dec	Unit
Battery Selection and VOC Tracking																						
31	BATHTH	High Battery Switch Threshold		BATHTH[14:7][2]															Init	0E54	18	V
34	BATLPF	Battery Tracking Filter Coeff	BATLPF[15:3]																Init	0A08	10	
32	BATLTH	Low Battery Switch Threshold		BATLTH[14:7][2]															Init	0D88	17	V
33	BSWLPF	RING Voltage Filter Coeff	BSWLPF[15:3]																Init	0A08	10	
Speedup																						
36	CMHITH	Speedup Threshold—High Byte	CMHITH[15:0]																Init	0001	1	V
35	CMLOTH	Speedup Threshold—Low Byte	CMLOTH[15:0]																Init	07F5	10	V
SLIC Diagnostics Filter																						
53	DIAGAC	SLIC Diags AC Detector Threshold	DIAGAC[15:0]																Diag			V
54	DIAGACCO	SLIC Diags AC Filter Coeff	DIAGACCO[15:3]																Diag	7FF8	127.3	Hz
51	DIAGDC	SLIC Diags dc Output	DIAGDC[15:0]																Diag			V
52	DIAGDCCO	SLIC Diags dc Filter Coeff	DIAGDCCO[15:3]																Diag	0A08	10	Hz
55	DIAGPK	SLIC Diags Peak Detector	DIAGPK[15:0]																Diag			V
Loop Currents																						
9	ILONG	Longitudinal Current Sense Value	ILONG[15:0][2]																DIag			mA
8	ILOOP	Loop Current Sense Value	ILOOP[15:0][2]																Diag			mA
18	IRING	Q5 Current Measurement	IRING[15:0]																Diag			mA
16	IRINGN	Q3 Current Measurement	IRINGN[15:0]																Diag			mA
15	IRINGP	Q2 Current Measurement	IRINGP[15:0]																Diag			mA
19	ITIP	Q6 Current Measurement	ITIP[15:0]																Diag			mA
17	ITIPN	Q4 Current Measurement	ITIPN[15:0]																Diag			mA
14	ITIPP	Q1 Current Measurement	ITIPP[15:0]																Diag			mA
Loop Closure Detection																						
24	LCRDBI	Loop Closure Detection Debounce Interval	LCRDBI[15:0][2]																Init	000C	15	ms
25	LCRLPF	Loop Closure Filter Coeff	LCRLPF[15:3]																Init	0A10	10	

Notes:
1. RAM values are 2's complement unless otherwise noted. Any register not listed is reserved and must not be written.
2. Only positive input values are valid for these RAM addresses.

RAM Addr	Mnemonic	Description	Bit 15	Bit 14	Bit 13	Bit 12	Bit 11	Bit 10	Bit 9	Bit 8	Bit 7	Bit 6	Bit 5	Bit 4	Bit 3	Bit 2	Bit 1	Bit 0	Type	Ex. Hex	Ex. Dec	Unit
26	LCRMASK	Loop Closure Mask Interval Coeff	LCRMASK[15:0][2]																Init	0040	80	ms
166	LCRMSKPR	LCR Mask During Polarity Reversal	LCRMSKPR[15:0]																Init	0040	80	ms
22	LCROFFHK	Off-Hook Detect Threshold	LCROFFHK[15:0][2]																Init	0C0C	10	mA
23	LCRONHK	On-Hook Detect Threshold	LCRONHK[15:0][2]																Init	0DE0	11	mA
Longitudinal Current Detection																						
29	LONGDBI	Ground Key Detection Debounce Interval	LONGDBI[15:0][2]																Init			ms
27	LONGHITH	Ground Key Detection Threshold	LONGHITH[15:0][2]																Init	08D4	7	mA
28	LONGLOTH	Ground Key Removal Detection Threshold	LONGLOTH[15:0][2]																Init	0A17	8	mA
30	LONGLPF	Ground Key Filter Coeff	LONGLPF[15:3]																Init	0A08	10	
Power Filter Coefficients																						
40	PLPF12	Q1/Q2 Thermal Low-pass Filter Coeff	PLPF12[15:3]																Init	0008	.3	s
41	PLPF34	Q3/Q4 Thermal Low-pass Filter Coeff	PLPF34[15:3]																Init	0008	.3	s
42	PLPF56	Q5/Q6 Thermal Low-pass Filter Coeff	PLPF56[15:3]																Init	0008	.3	s
Pulse Metering																						
68	PMAMPL	Pulse Metering Amplitude	PMAMPL[15:0]																Init	4000	65536	V
70	PMAMPTH	Pulse Metering AGC Amplitude Threshold	PMAMPTH[15:0]																Init	00C8	798	V
67	PMFREQ	Pulse Metering Frequency	PMFREQ[15:3]																Init	0000	0	Hz
69	PMRAMP	Pulse Metering Ramp Rate	PMRAMP[15:0]																Init	008A	550	s
Power Calculations																						
44	PQ1DH	Q1 Calculated Power	PQ1DH[15:0]																Diag			W
45	PQ2DH	Q2 Calculated Power	PQ2DH[15:0]																Diag			W
46	PQ3DH	Q3 Calculated Power	PQ3DH[15:0]																Diag			W
47	PQ4DH	Q4 Calculated Power	PQ4DH[15:0]																Diag			W
48	PQ5DH	Q5 Calculated Power	PQ5DH[15:0]																Diag			W
49	PQ6DH	Q6 Calculated Power	PQ6DH[15:0]																Diag			W
50	PSUM	Total Calculated Power	PSUM[15:0]																Diag			W
37	PTH12	Q1/Q2 Power Threshold	PTH12[15:0][2]																Init	0007	.22	W
38	PTH34	Q3/Q4 Power Threshold	PTH34[15:0][2]																Init	003C	17	W
39	PTH56	Q5/Q6 Power Threshold	PTH56[15:0][2]																Init	002A	1.28	W
43	RB56	Q5/Q6 Base Resistor	RB56[15:0]																Init			Ω
Ringing																						
59	RINGAMP	Ringing Amplitude	RINGAMP[15:0]																Init	00D5	47	Vrms

Notes:
1. RAM values are 2's complement unless otherwise noted. Any register not listed is reserved and must not be written.
2. Only positive input values are valid for these RAM addresses.

RAM Addr	Mnemonic	Description	Bit 15	Bit 14	Bit 13	Bit 12	Bit 11	Bit 10	Bit 9	Bit 8	Bit 7	Bit 6	Bit 5	Bit 4	Bit 3	Bit 2	Bit 1	Bit 0	Type	Ex. Hex	Ex. Dec	Unit
57	RINGFRHI	Ringing Frequency—High Byte		RINGFRHI[14:0]															Init	3F78	20	Hz
58	RINGFRLO	Ringing Frequency—Low Byte		RINGFRLO[14:3]															Init	6CE8	20	Hz
56	RINGOF	Ringing Waveform dc Offset		RINGOF[14:0]															Init	0000	0	V
60	RINGPHAS	Ringing Oscillator Initial Phase	RINGPHAS[15:3]																Init	0000		
Ring Trip Detection																						
66	RTACDB	AC Ring Trip Debounce Interval	RTACDB[15:0]																Init	0003	75	ms
64	RTACTH	AC Ring Trip Detect Threshold	RTACTH[15:0]																Init	1086		mA
65	RTDCDB	DC Ring Trip Debounce Interval	RTDCDB[15:0]																Init	0003	75	ms
62	RTDCTH	DC Ring Trip Detect Threshold	RTDCTH[15:0]																Init	7FFF		mA
63	RTPER	Ring Trip Low-pass Filter Coeff Period	RTPER[15:0]																Init	0028	40	
DC Speedup																						
168	SPEEDUP	DC Speedup Timer	SPEEDUP[15:0]																Init	0000	60	ms
169	SPEEDUPR	Ring Speedup Timer	SPEEDUPR[15:0][2]																Init	0000	60	ms
Loop Voltages																						
13	VBAT	Scaled Battery Voltage Measurement	VBAT[15:0]																Diag			V
4	VCM	Common Mode Voltage	VCM[15:0][2]																Init	0268	3	V
7	VLOOP	Loop Voltage	VLOOP[15:0][2]																Diag			V
0	VOC	Open Circuit Voltage	VOC[15:0][2]																Init	2668	48	V
1	VOCDELTA	VOC Delta for Off-Hook	VOCDELTA[15:0][2]																Init	059A	7	V
3	VOCHTH	VOC Delta Upper Threshold	VOCHTH[15:0][2]																Init	0198	2	V
2	VOCLTH	VOC Delta Lower Threshold	VOCLTH[15:0]																Init	F9A2	–8	V
10	VOCTRACK	Battery Tracking Open Circuit Voltage	VOCTRACK[15:0][2]																Diag			V
5	VOV	Overhead Voltage	VOV[15:0][2]																Init	0334	4	V
6	VOVRING	Ringing Overhead Voltage	VOVRING[14:0][2]																Init	0000	0	V
12	VRING	Scaled RING Voltage Measurement	VRING[15:0]																Diag			V
11	VTIP	Scaled TIP Voltage Measurement	VTIP[15:0]																Diag			V

Notes:
1. RAM values are 2's complement unless otherwise noted. Any register not listed is reserved and must not be written.
2. Only positive input values are valid for these RAM addresses.

8. 16-Bit Control Descriptions

BATHTH: High Battery Switch Threshold (RAM Address 31)

Bit	D15	D14	D13	D12	D11	D10	D9	D8	D7	D6	D5	D4	D3	D2	D1	D0
Name		BATHTH[14:7]														
Type	R/W															

Reset settings = 0x00

Bit	Name	Function
14:7	BATHTH[14:7]	**High Battery Switch Threshold.** Programs the voltage threshold for selecting the high battery supply (VBATH). Threshold is compared to the RING lead voltage (normal ACTIVE mode) plus the VOV value. 0 to 160.173 V range, 4.907 mV/LSB, 628 mV effective resolution.

BATLPF: Battery Tracking Filter Coefficient (RAM Address 34)

Bit	D15	D14	D13	D12	D11	D10	D9	D8	D7	D6	D5	D4	D3	D2	D1	D0
Name	BATLPF[15:3]															
Type	R/W															

Reset settings = 0x00

Bit	Name	Function
15:3	BATLPF[15:3]	**Battery Tracking Filter Coefficient.** Programs the digital low-pass filter block that filters the voltage measured on the RING lead when battery tracking is enabled.

BATLTH: Low Battery Switch Threshold (RAM Address 32)

Bit	D15	D14	D13	D12	D11	D10	D9	D8	D7	D6	D5	D4	D3	D2	D1	D0
Name		BATLTH[14:7]														
Type	R/W															

Reset settings = 0x00

Bit	Name	Function
14:7	BATLTH[14:7]	**Low Battery Switch Threshold.** Programs the voltage threshold for selecting the low battery supply (VBATL). Threshold is compared to the RING lead voltage (normal ACTIVE mode) plus the VOV value. 0 to 160.173 V range, 4.907 mV/LSB, 628 mV effective resolution.

BSWLPF: RING Voltage Filter Coefficient (RAM Address 33)

Bit	D15	D14	D13	D12	D11	D10	D9	D8	D7	D6	D5	D4	D3	D2	D1	D0
Name	BSWLPF[15:3]															
Type	R/W															

Reset settings = 0x00

Bit	Name	Function
15:3	BSWLPF[15:3]	**RING Voltage Filter Coefficient.** Programs the digital low-pass filter block that filters the voltage measured on the RING lead used to determine battery switching threshold.

CMHITH: Speedup Threshold—High Byte (RAM Address 36)

Bit	D15	D14	D13	D12	D11	D10	D9	D8	D7	D6	D5	D4	D3	D2	D1	D0
Name	CMHITH[15:0]															
Type	R/W															

Reset settings = 0x00

Bit	Name	Function
15:0	CMHITH[15:0]	**Speedup Threshold—High Byte.** Programs the upper byte of the threshold at which speedup mode in enabled. The CMLOTH RAM location holds the lower byte of this value.

CMLOTH: Speedup Threshold—Low Byte (RAM Address 35)

Bit	D15	D14	D13	D12	D11	D10	D9	D8	D7	D6	D5	D4	D3	D2	D1	D0
Name	CMLOTH[15:0]															
Type	R/W															

Reset settings = 0x00

Bit	Name	Function
15:0	CMLOTH[15:0]	**Speedup Threshold—Low Byte.** Programs the lower byte of the threshold at which speedup mode in enabled. The CMHITH RAM location holds the upper byte of this value.

DIAGAC: SLIC Diagnostics AC Output (RAM Address 53)

Bit	D15	D14	D13	D12	D11	D10	D9	D8	D7	D6	D5	D4	D3	D2	D1	D0
Name	DIAGAC[15:0]															
Type	R/W															

Reset settings = 0x00

Bit	Name	Function
15:0	DIAGAC[15:0]	**SLIC Diagnostic AC Output.** Provides a filtered value that reflects the ac rms value from the output of the monitor ADC. The input to the monitor ADC is selected by the setting in the SDIAG register (Register 13). The DIAGACCO RAM location determines the rms filter coefficient used. This register is used for frequencies < 300 Hz.

DIAGACCO: SLIC Diagnostics AC Filter Coefficient (RAM Address 54)

Bit	D15	D14	D13	D12	D11	D10	D9	D8	D7	D6	D5	D4	D3	D2	D1	D0
Name	DIAGACCO[15:3]															
Type	R/W															

Reset settings = 0x00

Bit	Name	Function
15:3	DIAGACCO[15:3]	**SLIC Diagnostics AC Filter Coefficient.** Programs the rms filter coefficient used in the ac measurement result from the monitor ADC.

DIAGDC: SLIC Diagnostics dc Output (RAM Address 51)

Bit	D15	D14	D13	D12	D11	D10	D9	D8	D7	D6	D5	D4	D3	D2	D1	D0
Name	DIAGDC[15:0]															
Type	R/W															

Reset settings = 0x00

Bit	Name	Function
15:0	DIAGDC[15:0]	**SLIC Diagnostic DC Output.** Provides a low-pass filtered value that reflects the dc value from the output of the monitor ADC. The input to the monitor ADC is selected by the setting in the SDIAG register (Register 13). The DIAGDCCO RAM location determines the low-pass filter coefficient used.

DIAGDCCO: SLIC Diagnostics dc Filter Coefficient (RAM Address 52)

Bit	D15	D14	D13	D12	D11	D10	D9	D8	D7	D6	D5	D4	D3	D2	D1	D0
Name	DIAGDCCO[15:3]															
Type	R/W															

Reset settings = 0x00

Bit	Name	Function
15:3	DIAGDCCO[15:3]	**SLIC Diagnostics dc Filter Coefficient.** Programs the low-pass filter coefficient used in the dc measurement result from the monitor ADC.

DIAGPK: SLIC Diagnostics Peak Detector (RAM Address 55)

Bit	D15	D14	D13	D12	D11	D10	D9	D8	D7	D6	D5	D4	D3	D2	D1	D0
Name	DIAGPK[15:0]															
Type	R/W															

Reset settings = 0x00

Bit	Name	Function
15:0	DIAGPK[15:0]	**SLIC Diagnostic Peak Detector.** Provides filtered value that reflects the peak amplitude from the output of the monitor ADC. The input to the monitor ADC is selected by the setting in the SDIAG register (Register 13).

ILONG: Longitudinal Current Sense Value (RAM Address 9)

Bit	D15	D14	D13	D12	D11	D10	D9	D8	D7	D6	D5	D4	D3	D2	D1	D0
Name	ILONG[15:0]															
Type	R/W															

Reset settings = 0x00

Bit	Name	Function
15:0	ILONG[15:0]	**Longitudinal Current Sense Value.** Holds the realtime measured longitudinal current. 0 to 101.09 mA measurement range, 3.097 μA/LSB, 500 μA effective resolution. Updated at an 800 Hz rate, signed/magnitude.

ILOOP: Loop Current Sense Value (RAM Address 8)

Bit	D15	D14	D13	D12	D11	D10	D9	D8	D7	D6	D5	D4	D3	D2	D1	D0
Name	ILOOP[15:0]															
Type	R/W															

Reset settings = 0x00

Bit	Name	Function
15:0	ILOOP[15:0]	**Loop Current Sense Value.** Holds the realtime measured loop current. 0 to 101.09 mA measurement range, 3.097 µA/LSB, 500 µA effective resolution. 800 Hz update rate, signed/magnitude.

IRING: (Transistor Q5) Current Measurement (RAM Address 18)

Bit	D15	D14	D13	D12	D11	D10	D9	D8	D7	D6	D5	D4	D3	D2	D1	D0
Name	IRING[15:0]															
Type	R/W															

Reset settings = 0x00

Bit	Name	Function
15:0	IRING[15:0]	**IRING (Transistor Q5) Current Measurement.** Reflects the current flowing into the IRING pin of the Si3200 (transistor Q5 of a discrete circuit). 3.097 µA/LSB, 2's complement.

IRINGN: (Transistor Q3) Current Measurement (RAM Address 16)

Bit	D15	D14	D13	D12	D11	D10	D9	D8	D7	D6	D5	D4	D3	D2	D1	D0
Name	IRINGN[15:0]															
Type	R/W															

Reset settings = 0x00

Bit	Name	Function
15:0	IRINGN[15:0]	**IRINGN (Transistor Q3) Current Measurement.** Reflects the current flowing into the IRINGN pin of the Si3200 (transistor Q3 of a discrete circuit). 195.3 nA/LSB, 2's complement.

IRINGP: (Transistor Q2) Current Measurement (RAM Address 15)

Bit	D15	D14	D13	D12	D11	D10	D9	D8	D7	D6	D5	D4	D3	D2	D1	D0
Name	IRINGP[15:0]															
Type	R/W															

Reset settings = 0x00

Bit	Name	Function
15:0	IRINGP[15:0]	**IRINGP (Transistor Q2) Current Measurement.** Reflects the current flowing into the IRINGP pin of the Si3200 (transistor Q2 of a discrete circuit). 3.097 μA/LSB, 2's complement.

ITIP: (Transistor Q6) Current Measurement (RAM Address 19)

Bit	D15	D14	D13	D12	D11	D10	D9	D8	D7	D6	D5	D4	D3	D2	D1	D0
Name	ITIP[15:0]															
Type	R/W															

Reset settings = 0x00

Bit	Name	Function
15:0	ITIP[15:0]	**ITIP (Transistor Q6) Current Measurement.** Reflects the current flowing into the ITIP pin of the Si3200 (transistor Q6 of a discrete circuit). 3.097 μA/LSB, 2's complement.

ITIPN: (Transistor Q4) Current Measurement (RAM Address 17)

Bit	D15	D14	D13	D12	D11	D10	D9	D8	D7	D6	D5	D4	D3	D2	D1	D0
Name	ITIPN[15:0]															
Type	R/W															

Reset settings = 0x00

Bit	Name	Function
15:0	ITIPN[15:0]	**ITIPN (Transistor Q4) Current Measurement.** Reflects the current flowing into the ITIPN pin of the Si3200 (transistor Q4 of a discrete circuit). 195.3 nA/LSB, 2's complement.

ITIPP: (Transistor Q1) Current Measurement (RAM Address 14)

Bit	D15	D14	D13	D12	D11	D10	D9	D8	D7	D6	D5	D4	D3	D2	D1	D0
Name	ITIPP[15:0]															
Type	R/W															

Reset settings = 0x00

Bit	Name	Function
15:0	ITIPP[15:0]	**ITIPP (Transistor Q1) Current Measurement.** Reflects the current flowing into the ITIPP pin of the Si3200 (transistor Q1 of a discrete circuit). 3.097 μA/LSB, 2's complement.

LCRDBI: Loop Closure Detection Debounce Interval (RAM Address 24)

Bit	D15	D14	D13	D12	D11	D10	D9	D8	D7	D6	D5	D4	D3	D2	D1	D0
Name	LCRDBI[15:0]															
Type	R/W															

Reset settings = 0x00

Bit	Name	Function
15:0	LCRDBI[15:0]	**Loop Closure Detection Debounce Interval.** Programs the debounce interval during the loop closure detection process. Programmable range is 0 to 40.96 s, 1.25 ms/LSB.

LCRLPF: Loop Closure Filter Coefficient (RAM Address 25)

Bit	D15	D14	D13	D12	D11	D10	D9	D8	D7	D6	D5	D4	D3	D2	D1	D0
Name	LCRLPF[15:3]															
Type	R/W															

Reset settings = 0x00

Bit	Name	Function
15:3	LCRLPF[15:3]	**Loop Closure Filter Coefficient.** Programs the digital low-pass filter block in the loop closure detection circuit. Refer to "4.5.1. Loop Closure Detection" on page 32 for calculation.

LCRMASK: Loop Closure Mask Interval Coefficient (RAM Address 26)

Bit	D15	D14	D13	D12	D11	D10	D9	D8	D7	D6	D5	D4	D3	D2	D1	D0
Name	LCRMASK[15:0]															
Type	R/W															

Reset settings = 0x00

Bit	Name	Function
15:0	LCRMASK[15:0]	**Loop Closure Mask Interval Coefficient.** Programs the loop closure detection mask interval. Programmable range is 0 to 40.96 s, 1.25 µs/LSB

LCRMSKPR: LCR Mask During Polarity Reversal (RAM Address 166)

Bit	D15	D14	D13	D12	D11	D10	D9	D8	D7	D6	D5	D4	D3	D2	D1	D0
Name	LCRMSKPR[15:0]															
Type	R/W															

Reset settings = 0x00

Bit	Name	Function
15:0	LCRMSKPR[15:0]	**LCR Mask During Polarity Reversal.** Programs the loop closure detection mask interval during a polarity reversal. Programmable range is 0 to 40.96 s, 1.25 µs/LSB

LCROFFHK: Loop Closure Detection Threshold—On-Hook to Off-Hook Transition (RAM Address 22)

Bit	D15	D14	D13	D12	D11	D10	D9	D8	D7	D6	D5	D4	D3	D2	D1	D0
Name	LCROFFHK[15:0]															
Type	R/W															

Reset settings = 0x00

Bit	Name	Function
15:0	LCROFFHK[15:0]	**Loop Closure Detection Threshold—On-Hook to Off-Hook Transition.** Programs the loop current threshold at which a valid loop closure is detected when transitioning from on-hook to off-hook. Hysteresis is provided by programming the ONHKTH RAM location to a different value that detects the off-hook to on-hook transition threshold. 0 to 101.09 mA programmable range, 3.097 µA/LSB, 396.4 µA effective resolution. Usable range is 0 to 61 mA.

LCRONHK: Loop Closure Detection Threshold—Off-Hook to On-Hook Transition (RAM Address 23)

Bit	D15	D14	D13	D12	D11	D10	D9	D8	D7	D6	D5	D4	D3	D2	D1	D0
Name	LCRONHK[15:0]															
Type	R/W															

Reset settings = 0x00

Bit	Name	Function
15:0	LCRONHK[15:0]	**Loop Closure Detection Threshold—Off-Hook to On-Hook Transition.** Programs the loop current threshold at which a valid loop closure event has been terminated (the off-hook to on-hook transition). The OFFHKTH RAM location determines the loop current threshold for detecting the off-hook to on-hook transition. 0 to 101.09 mA programmable range, 3.097 µA/LSB, 396.4 µA effective resolution. Usable range is 0 to 61 mA.

LONGDBI: Ground Key Detection Debounce Interval (RAM Address 29)

Bit	D15	D14	D13	D12	D11	D10	D9	D8	D7	D6	D5	D4	D3	D2	D1	D0
Name	LONGDBI[15:0]															
Type	R/W															

Reset settings = 0x00

Bit	Name	Function
15:0	LONGDBI[15:0]	**Ground Key Detection Debounce Interval.** Programs the debounce interval during the ground key detection process. Programmable range is 0 to 40.96 s, 1.25 ms/LSB.

LONGHITH: Ground Key Detection Threshold (RAM Address 27)

Bit	D15	D14	D13	D12	D11	D10	D9	D8	D7	D6	D5	D4	D3	D2	D1	D0
Name	LONGHITH[15:0]															
Type	R/W															

Reset settings = 0x00

Bit	Name	Function
15:0	LONGHITH[15:0]	**Ground Key Detection Threshold.** Programs the longitudinal current threshold at which a valid ground key event is detected. Hysteresis is provided by programming the LONGLOTH RAM location to a different value that detects the removal of a ground key event. 0 to 101.09 mA programmable range, 3.097 µA/LSB, 396.4 µA effective resolution. Usable range is 0 to 16 mA.

LONGLOTH: Ground Key Removal Detection Threshold (RAM Address 28)

Bit	D15	D14	D13	D12	D11	D10	D9	D8	D7	D6	D5	D4	D3	D2	D1	D0
Name	LONGLOTH[15:0]															
Type	R/W															

Reset settings = 0x00

Bit	Name	Function
15:0	LONGLOTH[15:0]	**Ground Key Removal Detection Threshold.** Programs the longitudinal current threshold at which it is determined that a ground key event has been terminated. 0 to 101.09 mA programmable range, 3.097 µA/LSB, 396.4 µA effective resolution. Usable range is 0 to 16 mA.

LONGLPF: Ground Key Filter Coefficient (RAM Address 30)

Bit	D15	D14	D13	D12	D11	D10	D9	D8	D7	D6	D5	D4	D3	D2	D1	D0
Name	LONGLPF[15:3]															
Type	R/W															

Reset settings = 0x00

Bit	Name	Function
15:3	LONGLPF[15:3]	**Ground Key Filter Coefficient.** Programs the digital low-pass filter block in the ground key detection circuit. Refer to "4.5.2. Ground Key Detection" on page 34 for calculation.

PLPF12: Q1/Q2 Thermal Low-pass Filter Coefficient (RAM Address 40)

Bit	D15	D14	D13	D12	D11	D10	D9	D8	D7	D6	D5	D4	D3	D2	D1	D0
Name	PLPF12[15:3]															
Type	R/W															

Reset settings = 0x00

Bit	Name	Function
15:3	PLPF12[15:3]	**Q1/Q2 Thermal Low-pass Filter Coefficient.** Programs the thermal low-pass filter value used to calculate the power in transistors Q1 and Q2. Also used to set thermal IPF when using Si3200. Refer to "4.4.6. Power Filter and Alarms" on page 27 for use.

PLPF34: Q3/Q4 Thermal Low-pass Filter Coefficient (RAM Address 41)

Bit	D15	D14	D13	D12	D11	D10	D9	D8	D7	D6	D5	D4	D3	D2	D1	D0
Name	PLPF34[15:3]															
Type	R/W															

Reset settings = 0x00

Bit	Name	Function
15:3	PLPF34[15:3]	**Q3/Q4 Thermal Low-pass Filter Coefficient.** Programs the thermal low-pass filter value used to calculate the power in transistors Q3 and Q4. Refer to "4.4.6. Power Filter and Alarms" on page 27 for use.

PLPF56: Q5/Q6 Thermal Low-pass Filter Coefficient (RAM Address 42)

Bit	D15	D14	D13	D12	D11	D10	D9	D8	D7	D6	D5	D4	D3	D2	D1	D0
Name	PLPF56[15:3]															
Type	R/W															

Reset settings = 0x00

Bit	Name	Function
15:3	PLPF56[15:3]	**Q5/Q6 Thermal Low-pass Filter Coefficient.** Programs the thermal low-pass filter value used to calculate the power in transistors Q5 and Q6. Refer to "4.4.6. Power Filter and Alarms" on page 27 for use.

PMAMPL: Pulse Metering Amplitude (RAM Address 68)

Bit	D15	D14	D13	D12	D11	D10	D9	D8	D7	D6	D5	D4	D3	D2	D1	D0
Name	PMAMPL[15:0]															
Type	R/W															

Reset settings = 0x00

Bit	Name	Function
15:0	PMAMPL[15:0]	**Pulse Metering Amplitude.** Programs the voltage amplitude of the pulse metering signal. Refer to "4.13.2. Pulse Metering Generation" on page 46 for use.

PMAMPTH: Pulse Metering AGC Amplitude Threshold (RAM Address 70)

Bit	D15	D14	D13	D12	D11	D10	D9	D8	D7	D6	D5	D4	D3	D2	D1	D0
Name	PMAMPTH[15:0]															
Type	R/W															

Reset settings = 0x00

Bit	Name	Function
15:0	PMAMPTH[15:0]	**Pulse Metering AGC Amplitude Threshold.** Programs the voltage threshold for the automatic gain control (AGC) stage in the transmit audio path. Refer to "4.13.2. Pulse Metering Generation" on page 46 for use.

PMFREQ: Pulse Metering Frequency (RAM Address 67)

Bit	D15	D14	D13	D12	D11	D10	D9	D8	D7	D6	D5	D4	D3	D2	D1	D0
Name	PMFREQ[15:3]															
Type	R/W															

Reset settings = 0x00

Bit	Name	Function
15:3	PMFREQ[15:3]	**Pulse Metering Frequency.** Programs the frequency of the pulse metering signal. Refer to "4.13.2. Pulse Metering Generation" on page 46 for use.

PMRAMP: Pulse Metering Ramp Rate (RAM Address 69)

Bit	D15	D14	D13	D12	D11	D10	D9	D8	D7	D6	D5	D4	D3	D2	D1	D0
Name	PMRAMP[15:0]															
Type	R/W															

Reset settings = 0x00

Bit	Name	Function
15:0	PMRAMP[15:0]	**Pulse Metering Ramp Rate.** Programs the attack and decay rate of the pulse metering signal. Programmable range is 0 to 4.0965 at 0.125 ms/LSB (15 bit). Refer to "4.13.2. Pulse Metering Generation" on page 46 for use.

PQ1DH: Q1 Calculated Power (RAM Address 44)

Bit	D15	D14	D13	D12	D11	D10	D9	D8	D7	D6	D5	D4	D3	D2	D1	D0
Name	PQ1DH[15:0]															
Type	R/W															

Reset settings = 0x00

Bit	Name	Function
15:0	PQ1DH[15:0]	**Q1 Calculated Power.** Provides the calculated power in transistor Q1 when used with discrete linefeed circuitry. 0 to 16.319 W range, 498 µW/LSB.

PQ2DH: Q2 Calculated Power (RAM Address 45)

Bit	D15	D14	D13	D12	D11	D10	D9	D8	D7	D6	D5	D4	D3	D2	D1	D0
Name	PQ2DH[15:0]															
Type	R/W															

Reset settings = 0x00

Bit	Name	Function
15:0	PQ2DH[15:0]	**Q2 Calculated Power.** Provides the calculated power in transistor Q2. Used with discrete linefeed circuitry. 0 to 16.319 W range, 498 µW/LSB.

PQ3DH: Q3 Calculated Power (RAM Address 46)

Bit	D15	D14	D13	D12	D11	D10	D9	D8	D7	D6	D5	D4	D3	D2	D1	D0
Name	PQ3DH[15:0]															
Type	R/W															

Reset settings = 0x00

Bit	Name	Function
15:0	PQ3DH[15:0]	**Q3 Calculated Power.** Provides the calculated power in transistor Q3. Used with discrete linefeed circuitry. 0 to 1.03 W range, 31.4 µW/LSB.

PQ4DH: Q4 Calculated Power (RAM Address 47)

Bit	D15	D14	D13	D12	D11	D10	D9	D8	D7	D6	D5	D4	D3	D2	D1	D0
Name	PQ4DH[15:0]															
Type	R/W															

Reset settings = 0x00

Bit	Name	Function
15:0	PQ4DH[15:0]	**Q4 Calculated Power.** Provides the calculated power in transistor Q4. Used with discrete linefeed circuitry. 0 to 1.03 W range, 31.4 µW/LSB.

PQ5DH: Q5 Calculated Power (RAM Address 48)

Bit	D15	D14	D13	D12	D11	D10	D9	D8	D7	D6	D5	D4	D3	D2	D1	D0
Name	PQ5DH[15:0]															
Type	R/W															

Reset settings = 0x00

Bit	Name	Function
15:0	PQ5DH[15:0]	**Q5 Calculated Power.** Provides the calculated power in transistor Q5. Used with discrete linefeed circuitry. 0 to 16.319 W range, 498 µW/LSB.

PQ6DH: Q6 Calculated Power (RAM Address 49)

Bit	D15	D14	D13	D12	D11	D10	D9	D8	D7	D6	D5	D4	D3	D2	D1	D0
Name	PQ6DH[15:0]															
Type	R/W															

Reset settings = 0x00

Bit	Name	Function
15:0	PQ6DH[15:0]	**Q6 Calculated Power.** Provides the calculated power in transistor Q6. Used with discrete linefeed circuitry. 0 to 16.319 W range, 498 µW/LSB.

PSUM: Total Calculated Power (RAM Address 50)

Bit	D15	D14	D13	D12	D11	D10	D9	D8	D7	D6	D5	D4	D3	D2	D1	D0
Name	PSUM[15:0]															
Type	R/W															

Reset settings = 0x00

Bit	Name	Function
15:0	PSUM[15:0]	**Total Calculated Power.** Provides the total calculated power in transistors Q1 through Q6. Using the Si3200, this RAM location reflects the total power dissipated in the Si3200 package. 0 to 34.72 W range, 1059.6 μW/LSB

PTH12: Q1/Q2 Power Alarm Threshold (RAM Address 37)

Bit	D15	D14	D13	D12	D11	D10	D9	D8	D7	D6	D5	D4	D3	D2	D1	D0
Name	PTH12[15:0]															
Type	R/W															

Reset settings = 0x00

Bit	Name	Function
15:0	PTH12[15:0]	**Q1/Q2 Power Alarm Threshold.** Programs the power threshold in transistors Q1 and Q2 at which a power alarm is triggered. Also programs the total power threshold when using Si3200. 0 to 16.319 W programmable range, 498 μW/LSB (0 to 34.72 W range, 1059.6 μW/LSB in Si3200 mode). Refer to "4.4.6. Power Filter and Alarms" on page 27 for use.

PTH34: Q3/Q4 Power Alarm Threshold (RAM Address 38)

Bit	D15	D14	D13	D12	D11	D10	D9	D8	D7	D6	D5	D4	D3	D2	D1	D0
Name	PTH34[15:0]															
Type	R/W															

Reset settings = 0x00

Bit	Name	Function
15:0	PTH34[15:0]	**Q3/Q4 Power Alarm Threshold.** Programs the power threshold in transistors Q3 and Q4 at which a power alarm is triggered. 0 to 1.03 W programmable range, 31.4 µW/LSB. Refer to "4.4.6. Power Filter and Alarms" on page 27 for use.

PTH56: Q5/Q6 Power Alarm Threshold (RAM Address 39)

Bit	D15	D14	D13	D12	D11	D10	D9	D8	D7	D6	D5	D4	D3	D2	D1	D0
Name	PTH56[15:0]															
Type	R/W															

Reset settings = 0x00

Bit	Name	Function
15:0	PTH56[15:0]	**Q5/Q6 Power Alarm Threshold.** Programs the power threshold in transistors Q5 and Q6 at which a power alarm is triggered. 0 to 16.319 W programmable range, 498 µW/LSB. Refer to "4.4.6. Power Filter and Alarms" on page 27 for use.

RB56: Q5/Q6 Base Resistance (RAM Address 43)

Bit	D15	D14	D13	D12	D11	D10	D9	D8	D7	D6	D5	D4	D3	D2	D1	D0
Name	RB56[15:0]															
Type	R/W															

Reset settings = 0x00

Bit	Name	Function
15:0	RB56[15:0]	**Q5/Q6 Base Resistance.** Programs the base resistance feeding transistors, Q5 and Q6.

RINGAMP: Ringing Amplitude (RAM Address 59)

Bit	D15	D14	D13	D12	D11	D10	D9	D8	D7	D6	D5	D4	D3	D2	D1	D0
Name	RINGAMP[15:0]															
Type	R/W															

Reset settings = 0x00

Bit	Name	Function
15:0	RINGAMP[15:0]	**Ringing Amplitude.** This RAM location programs the peak ringing amplitude. Refer to "4.6. Ringing Generation" on page 37 for use.

Reset settings = 0x00

RINGFRHI: Ringing Frequency High Byte (RAM Address 57)

Bit	D15	D14	D13	D12	D11	D10	D9	D8	D7	D6	D5	D4	D3	D2	D1	D0
Name		RINGFRHI[14:0]														
Type	R/W															

Bit	Name	Function
14:0	RINGFRHI[14:0]	**Ringing Frequency High Byte.** This RAM location programs the upper byte of the ringing frequency coefficient. The RINGFRLO RAM location holds the lower byte. Refer to "4.6. Ringing Generation" on page 37 for use.

RINGFRLO: Ringing Frequency Low Byte (RAM Address 58)

Bit	D15	D14	D13	D12	D11	D10	D9	D8	D7	D6	D5	D4	D3	D2	D1	D0
Name	RINGFRLO[15:3]															
Type	R/W															

Reset settings = 0x00

Bit	Name	Function
15:3	RINGFRLO[15:3]	**Ringing Frequency Low Byte.** This RAM location programs the lower byte of the ringing frequency coefficient. The RINGFRHI RAM location holds the upper byte. Refer to "4.6. Ringing Generation" on page 37 for use.

RINGOF: Ringing Waveform dc Offset (RAM Address 56)

Bit	D15	D14	D13	D12	D11	D10	D9	D8	D7	D6	D5	D4	D3	D2	D1	D0
Name		RINGOF[14:0]														
Type	R/W															

Reset settings = 0x00

Bit	Name	Function
14:0	RINGOF[14:0]	**Ringing Waveform dc Offset.** Programs the amount of dc offset that is added to the ringing waveform during ringing mode. 0 to 63.3 V programmable range, 4.907 mV/LSB, 1.005 V effective resolution.

RINGPHAS: Ringing Oscillator Initial Phase (RAM Address 60)

Bit	D15	D14	D13	D12	D11	D10	D9	D8	D7	D6	D5	D4	D3	D2	D1	D0
Name	RINGPHAS[15:3]															
Type	R/W															

Reset settings = 0x00

Bit	Name	Function
15:3	RINGPHAS[15:3]	**RInging Oscillator Initial Phase.** Programs the initial phase of the ringing oscillator. 0 to 1.024 s range, 31.25 µs/LSB for trapezoidal ringing.

RTACDB: AC Ring Trip Debounce Interval (RAM Address 66)

Bit	D15	D14	D13	D12	D11	D10	D9	D8	D7	D6	D5	D4	D3	D2	D1	D0
Name	RTACDB[15:0]															
Type	R/W															

Reset settings = 0x00

Bit	Name	Function
15:0	RTACDB[15:0]	**AC Ring Trip Debounce Interval.** Programs the debounce interval for the ac loop current detection circuit. Refer to "4.8. Ring Trip Detection" on page 41 for recommended values.

RTACTH: AC Ring Trip Detect Threshold (RAM Address 64)

Bit	D15	D14	D13	D12	D11	D10	D9	D8	D7	D6	D5	D4	D3	D2	D1	D0
Name	RTACTH[15:0]															
Type	R/W															

Reset settings = 0x00

Bit	Name	Function
15:0	RTACTH[15:0]	**AC Ring Trip Detect Threshold.** Programs the ac loop current threshold value above which a valid ring trip event is detected. See "4.8. Ring Trip Detection" on page 41 for recommended values.

RTDCDB: DC Ring Trip Debounce Interval (RAM Address 65)

Bit	D15	D14	D13	D12	D11	D10	D9	D8	D7	D6	D5	D4	D3	D2	D1	D0
Name	RTDCDB[15:0]															
Type	R/W															

Reset settings = 0x00

Bit	Name	Function
15:0	RTDCDB[15:0]	**DC Ring Trip Debounce Interval.** Programs the debounce interval for the dc loop current detection circuit. 0 to 40.96 s programmable range, 1.25 µs/LSB. Refer to "4.8. Ring Trip Detection" on page 41 for recommended values.

RTDCTH: DC Ring Trip Detect Threshold (RAM Address 62)

Bit	D15	D14	D13	D12	D11	D10	D9	D8	D7	D6	D5	D4	D3	D2	D1	D0
Name	RTDCTH[15:0]															
Type	R/W															

Reset settings = 0x00

Bit	Name	Function
15:0	RTDCTH[15:0]	**DC Ring Trip Detect Threshold.** Programs the dc loop current threshold value above which a valid ring trip event is detected. See “4.8. Ring Trip Detection” for recommended values.

RTPER: Ring Trip Low-pass Filter Coefficient (RAM Address 63)

Bit	D15	D14	D13	D12	D11	D10	D9	D8	D7	D6	D5	D4	D3	D2	D1	D0
Name	RTPER[15:0]															
Type	R/W															

Reset settings = 0x00

Bit	Name	Function
15:0	RTPER[15:0]	**Ring Trip Low-pass Filter Coefficient.** Programs the low-pass filter coefficient used in the ring trip detection circuit. See "4.8. Ring Trip Detection" for recommended values.

SPEEDUP: DC Settling Speedup Timer (RAM Address 168)

Bit	D15	D14	D13	D12	D11	D10	D9	D8	D7	D6	D5	D4	D3	D2	D1	D0
Name	SPEEDUP[15:0]															
Type	R/W															

Reset settings = 0x00

Bit	Name	Function
15:0	SPEEDUP[15:0]	**DC Settling Speedup Timer.** Programs the dc speedup timer that allows quicker settling during loop transitions. This timer is invoked by the common-mode threshold detectors, CMHITH and CMLOTH. 1.25 ms/LSB, exception: 0x0000 = 60 ms (default).

SPEEDUPR: Ringing Speedup Timer (RAM Address 169)

Bit	D15	D14	D13	D12	D11	D10	D9	D8	D7	D6	D5	D4	D3	D2	D1	D0
Name	SPEEDUPR[15:0]															
Type	R/W															

Reset settings = 0x00

Bit	Name	Function
15:0	SPEEDUPR[15:0]	**Ringing Speedup Timer.** Programs the dc speedup timer that allows quicker settling following ringing bursts. This timer is invoked by any mode change from the ringing state. 40.96 s range, 1.25 ms/LSB, exception: 0x0000 = 60 ms (default).

VBAT: Scaled Battery Voltage Measurement (RAM Address 13)

Bit	D15	D14	D13	D12	D11	D10	D9	D8	D7	D6	D5	D4	D3	D2	D1	D0
Name	VBAT[15:0]															
Type	R/W															

Reset settings = 0x00

Bit	Name	Function
15:0	VBAT[15:0]	**Scaled Battery Voltage Measurement.** Reflects the battery voltage measured through the monitor ADC. 0 to 160.173 V range, 4.907 mV/LSB, 628 mV effective resolution. (251 mV effective resolution for VBAT < 64.07 V).

VCM: Common Mode Voltage (RAM Address 4)

Bit	D15	D14	D13	D12	D11	D10	D9	D8	D7	D6	D5	D4	D3	D2	D1	D0
Name		VCM[14:0]														
Type	R/W															

Reset settings = 0x00

Bit	Name	Function
14:0	VCM[14:0]	**Common Mode Voltage.** Programs the common mode voltage between the TIP lead and ground in normal polarity (between RING and ground in reverse polarity). The recommended value is 3 V, but can be programmed between 0 and 63.3 V. 4.907 mV/LSB, 1.005 V effective resolution,

VLOOP: Loop Voltage Sense Value (RAM Address 7)

Bit	D15	D14	D13	D12	D11	D10	D9	D8	D7	D6	D5	D4	D3	D2	D1	D0
Name	VLOOP[15:0]															
Type	R/W															

Reset settings = 0x00

Bit	Name	Function
15:0	VLOOP[15:0]	**Loop Voltage Sense Value.** Holds the realtime measured loop voltage across TIP-RING. 0 to 160.173 V range, 4.907 mV/LSB, 628 mV effective resolution (251 mV effective resolution for VLOOP < 64.07 V.

VOC: Open Circuit Voltage (RAM Address 0)

Bit	D15	D14	D13	D12	D11	D10	D9	D8	D7	D6	D5	D4	D3	D2	D1	D0
Name		VOC[14:0]														
Type	R/W															

Reset settings = 0x00

Bit	Name	Function
14:0	VOC[14:0]	**Open Circuit Voltage.** Programs the TIP-RING voltage during on-hook conditions. The recommended value is 48 V but can be programmed between 0 and 63.3 V. 4.907 mV/LSB, 1.005 V effective resolution.

VOCDELTA: Open Circuit Off-Hook Offset Voltage (RAM Address 1)

Bit	D15	D14	D13	D12	D11	D10	D9	D8	D7	D6	D5	D4	D3	D2	D1	D0
Name		VOCDELTA[14:0]														
Type	R/W															

Reset settings = 0x00

Bit	Name	Function
14:0	VOCDELTA[14:0]	**Open Circuit Off-Hook Offset Voltage.** Programs the amount of offset that is added to the VOC RAM value when the device transitions to off-hook. The recommended value is 7 V. 0 to 63.3 V range, 4.907 mV/LSB, 1.005 V effective resolution.

VOCHTH: V_{OC} Delta Upper Threshold (RAM Address 3)

Bit	D15	D14	D13	D12	D11	D10	D9	D8	D7	D6	D5	D4	D3	D2	D1	D0
Name	VOCHTH[15:0]															
Type	R/W															

Reset settings = 0x00

Bit	Name	Function
15:0	VOCHTH[15:0]	**V_{OC} Delta Upper Threshold.** Programs the voltage delta above the VOC value at which the VOCDELTA offset voltage is removed. This threshold is only applicable during the off-hook to on-hook transition, and the VOCTHDL RAM location determines the threshold voltage during the on-hook to off-hook transition. Default value is 2 V. 0 to 63.3 V range, 4.907 mV/LSB, 1.005 V effective resolution.

VOCLTH: V_{OC} Delta Lower Threshold (RAM Address 2)

Bit	D15	D14	D13	D12	D11	D10	D9	D8	D7	D6	D5	D4	D3	D2	D1	D0
Name	VOCLTH[15:0]															
Type	R/W															

Reset settings = 0x00

Bit	Name	Function
15:0	VOCLTH[15:0]	**V_{OC} Delta Lower Threshold.** Programs the voltage delta below the VOC value at which the VOCDELTA offset voltage is added. This threshold is only applicable during the on-hook to off-hook transition, and the VOCTHDH RAM location determines the threshold voltage during the off-hook to on-hook transition. Default value is –8 V. 0 to 63.3 V range, 4.907 mV/LSB, 1.005 V effective resolution.

VOCTRACK: Battery Tracking Open Circuit Voltage (RAM Address 10)

Bit	D15	D14	D13	D12	D11	D10	D9	D8	D7	D6	D5	D4	D3	D2	D1	D0
Name	VOCTRACK[15:0]															
Type	R/W															

Reset settings = 0x00

Bit	Name	Function
15:0	VOCTRACK[15:0]	**Battery Tracking Open Circuit Voltage.** Reflects the TIP-RING voltage during on-hook conditions when the battery supply has dropped below the point where the VOC setting cannot be maintained. 0 to 63.3 V programmable range, 4.907 mV/LSB, 1.005 V effective resolution.

VOV: Overhead Voltage (RAM Address 5)

Bit	D15	D14	D13	D12	D11	D10	D9	D8	D7	D6	D5	D4	D3	D2	D1	D0
Name		VOV[14:0]														
Type	R/W															

Reset settings = 0x00

Bit	Name	Function
14:0	VOV[14:0]	**Overhead Voltage.** Programs the overhead voltage between the RING lead and the voltage on the VBAT pin in normal polarity (between TIP and ground in reverse polarity). This value increases or decreases as the battery voltage changes to maintain a constant open circuit voltage, but maintains its user-defined setting to ensure sufficient overhead for audio transmission when the battery voltage decreases. 0 to 63.3 V programmable range, 4.907 mV/LSB, 1.005 V effective resolution.

VOVRING: Ringing Overhead Voltage (RAM Address 6)

Bit	D15	D14	D13	D12	D11	D10	D9	D8	D7	D6	D5	D4	D3	D2	D1	D0
Name		VOVRING[14:0]														
Type	R/W															

Reset settings = 0x00

Bit	Name	Function
14:0	VOVRING[14:0]	**Ringing Overhead Voltage.** Programs the overhead voltage between the peak negative ringing level and VBATH. This value increases or decreases as the battery voltage changes in order to maintain a constant open circuit voltage but maintains its user-defined setting to ensure sufficient overhead for audio transmission when the battery voltage decreases. 0 to 63.3 V programmable range, 4.907 mV/LSB, 1.005 V effective resolution.

VRING: Scaled RING Voltage Measurement (RAM Address 12)

Bit	D15	D14	D13	D12	D11	D10	D9	D8	D7	D6	D5	D4	D3	D2	D1	D0
Name	VRING[15:0]															
Type	R/W															

Reset settings = 0x00

Bit	Name	Function
15:0	VRING[15:0]	**Scaled RING Voltage Measurement.** Reflects the RING-to-ground voltage measured through the monitor ADC. 0 to 160.173 V range, 4.907 mV/LSB, 628 mV effective resolution (251 mV effective resolution for VRING < 64.07 V). Updated at 800 Hz rate, 2's complement.

VTIP: Scaled TIP Voltage Measurement (RAM Address 11)

Bit	D15	D14	D13	D12	D11	D10	D9	D8	D7	D6	D5	D4	D3	D2	D1	D0
Name	VTIP[15:0]															
Type	R/W															

Reset settings = 0x00

Bit	Name	Function
15:0	VTIP[15:0]	**Scaled TIP Voltage Measurement.** Reflects the TIP to ground voltage measured through the monitor ADC. 4.92 mV/LSB, 2's complement. 0 to 160.173 V range, 4.907 mV/LSB, 628 mV effective resolution (251 mV effective resolution for VTIP < 64.07 V). Updated at 800 Hz rate, 2's complement.

9. Pin Descriptions: Si3232

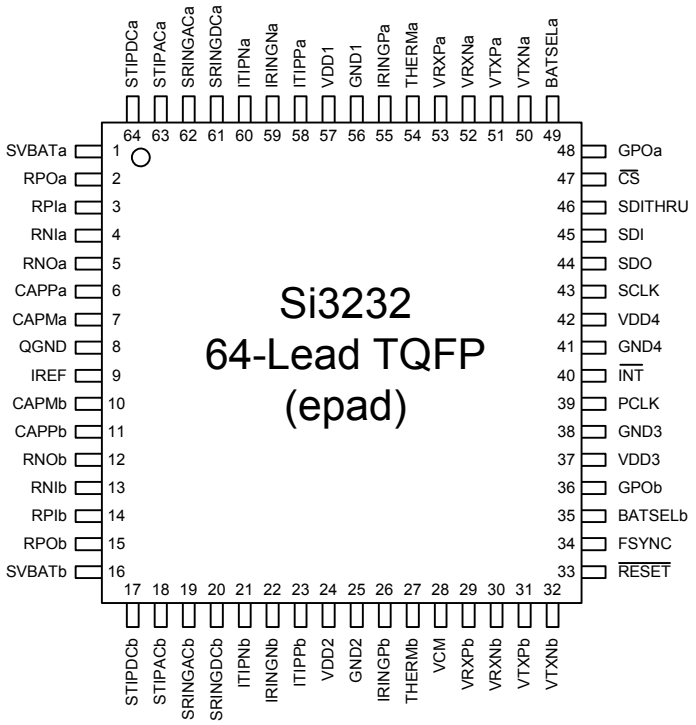

Pin #(s)	Symbol	Input/ Output	Description
1, 16	SVBATa, SVBATb	I	**Battery Sensing Input—**Analog current input used to sense battery voltage.
2, 15	RPOa, RPOb	O	**Transconductance Amplifier Resistor Input Connection.**
3, 14	RPIa, RPIb	I	**Transconductance Amplifier Resistor Output Connection.**
4, 13	RNIa, RNIb	I	**Transconductance Amplifier Resistor Output Connection.**
5, 12	RNOa, RNOb	O	**Transconductance Amplifier Resistor Input Connection.**
6, 11	CAPPa, CAPPb		**Differential Capacitor—**Capacitor used in low-pass filter to stabilize SLIC feedback loops.
7, 10	CAPMa, CAPMb		**Common Mode Capacitor—**Capacitor used in low-pass filter to stabilize SLIC feedback loops.
8	QGND		**Component Reference Ground—**Return path for differential and common-mode capacitors. Do not connect to system ground.
9	IREF	I	**IREF Current Reference—**Connects to an external resistor used to provide a high-accuracy reference current. Return path for IREF resistor. Should be routed to QGND pin.
17, 64	STIPDCb, STIPDCa	I	**TIP Sense—**Analog current input used to sense dc voltage on TIP side of subscriber loop.
18, 63	STIPACb, STIPACa	I	**TIP Transmit Input—**Analog input used to sense ac voltage on TIP side of subscriber loop.

Pin #(s)	Symbol	Input/ Output	Description
19, 62	SRINGACb, SRINGACa	I	**RING Transmit Input—**Analog input used to sense ac voltage on RING side of subscriber loop.
20, 61	SRINGDCb, SRINGDCa	I	**RING Sense—**Analog current input used to sense dc voltage on RING side of subscriber loop.
21, 60	ITIPNb, ITIPNa	O	**Negative TIP Current Control—**Analog current output providing dc current return path to V_{BAT} from TIP side of the loop.
22, 59	IRINGNb, IRINGNa	O	**Negative RING Current Control—**Analog current output providing dc current return path to V_{BAT} from RING side of loop.
23, 58	ITIPPb, ITIPPa	O	**Positive TIP Current Control—**Analog current output driving dc current onto TIP side of subscriber loop in normal polarity. Also modulates ac current onto TIP side of loop.
24, 37, 42, 57	VDD2, VDD3, VDD4, VDD1		**Supply Voltage—**Power supply for internal analog and digital circuitry. Connect all VDD pins to the same supply and decouple to adjacent GND pins as close to the pins as possible.
25, 38, 41, 56	GND2, GND3 GND4, GND1		**Ground—**Ground connection for internal analog and digital circuitry. Connect all pins to low-impedance ground plane.
26, 55	IRINGPb, IRINGPa	O	**Positive RING Current Control—**Analog current output driving dc current onto RING side of subscriber loop in reverse polarity. Also modulates ac current onto RING side of loop.
27, 54	THERMb, THERMa	I	**Temperature Sensor—**Used to sense the internal temperature of the Si3200. Connect to THERM pin of Si3200 or to V_{DD} when using discrete linefeed circuit.
28	VCM	I	**Common Mode Voltage Input**—Connect to external common mode voltage source.
29, 30	VRXPb, VRXNb	I	**Differential Analog Receive Input for SLIC Channel b.**
31, 32	VTXPb, VTXNb	O	**Differential Analog Transmit Output for SLIC Channel b.**
33	$\overline{\text{RESET}}$	I	**Reset—**Active low. Hardware reset used to place all control registers in known state. An internal pulldown resistor asserts this pin low when it is not driven externally.
34	FSYNC	I	**Frame Sync—**8 kHz frame synchronization signal for internal timing. May be short or long pulse format.
35, 49	BATSELb, BATSELa	O	**Battery Voltage Select Pin—**Used to switch between high and low external battery supplies.
36, 48	GPOb, GPOa	O	**General Purpose Driver Output—**Used to drive test relays for connecting loop test equipment or as a second battery select pin.
39	PCLK	I	**PCM System Clock—**Master clock input.
40	$\overline{\text{INT}}$	O	**Interrupt—**Maskable interrupt output. Open drain output for wire-ORed operation.
43	SCLK	I	**Serial Port Bit Clock Input—**Controls serial data on SDO and latches data on SDI.
44	SDO	O	**Serial Port Data Out—**Serial port control data output.
45	SDI	I	**Serial Port Data In—**Serial port control data input.

Pin #(s)	Symbol	Input/ Output	Description
46	SDITHRU	O	**Serial Daisy Chain—**Enables up to 16 devices to use a single CS for serial port control. Connect SDITHRU pin from master device to SDI pin of slave device. An internal pullup resistor holds this pin high during idle periods.
47	$\overline{CS}$	I	**Chip Select—**Active low. When inactive, SCLK and SDIO are ignored. When active, serial port is operational.
50, 51	VTXNa, VTXPa	O	**Differential Analog Transmit Output for SLIC Channel a.**
52, 53	VRXNa, VRXPa	I	**Differential Analog Receive Input for SLIC Channel a.**
epad	GND		**Exposed Die Paddle Ground.** Connect to a low-impedance ground plane via topside PCB pad directly under the part. See "12. Package Outline: 64-Pin eTQFP" on page 123 for PCB pad dimensions.

10. Pin Descriptions: Si3200

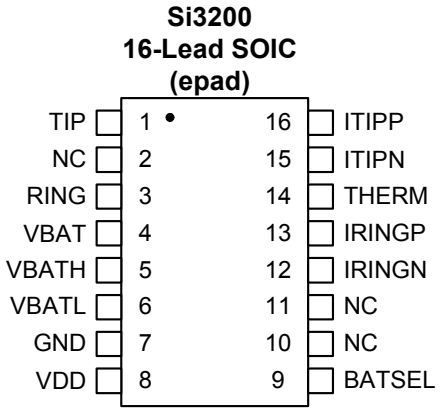

Pin #(s)	Symbol	Input/ Output	Description
1	TIP	I/O	**TIP Output**—Connect to the TIP lead of the subscriber loop.
2	NC		**No Internal Connection**—Do not connect to any electrical signal.
3	RING	I/O	**RING Output**—Connect to the RING lead of the subscriber loop.
4	VBAT		**Operating Battery Voltage**—Si3200 internal system battery supply. Connect SVBATa/b pin from Si3232 and decouple with a 0.1 μF/100 V filter capacitor.
5	VBATH		**High Battery Voltage**—Connect to the system ringing battery supply. Decouple with a 0.1 μF/100 V filter capacitor.
6	VBATL	—	**Low Battery Voltage**—Connect to lowest system battery for off-hook operation driving short loops. An internal diode prevents leakage current when operating from VBATH.
7	GND		**Ground**—Connect to a low-impedance ground plane.
8	VDD		**Supply Voltage**—Main power supply for all internal circuitry. Connect to a 3.3 V or 5 V supply. Decouple locally with a 0.1 μF/10 V capacitor.
9	BATSEL	I	**Battery Voltage Select**—Connect to the BATSEL pin of the Si3232 through an external resistor to enable automatic battery switching.
10	NC		**No Internal Connection**—Do not connect to any electrical signal.
11	NC		**No Internal Connection**—Do not connect to any electrical signal.
12	IRINGN	I	**Negative RING Current Control**—Connect to the IRINGN lead of the Si3232.
13	IRINGP	I	**Positive RING Current Drive**—Connect to the IRINGP lead of the Si3232.
14	THERM	O	**Thermal Sensor**—Connection to internal temperature-sensing circuit. Connect to THERM pin of Si3232.

Pin #(s)	Symbol	Input/ Output	Description
15	ITIPN	I	**Negative TIP Current Control**—Connect to the ITIPN lead of the Si3232.
16	ITIPP	I	**Positive TIP Current Control**—Connect to the ITIPP lead of the Si3232.
epad	GND		**Exposed Die Paddle Ground.** For adequate thermal management, the exposed die paddle should be soldered to a PCB pad that is connected to low-impedance inner and/or backside ground planes using multiple vias. See "13. Package Outline: 16-Pin ESOIC" on page 124 for PCB pad dimensions.

11. Ordering Guide

Part Number	Package	Lead Free	Temp Range
Si3232-X-FQ	TQFP-64	Yes	0 to 70 °C
Si3232-X-GQ	TQFP-64	Yes	–40 to 85 °C
Si3200-X-FS	SOIC-16	Yes	0 to 70 °C
Si3200-X-GS	SOIC-16	Yes	–40 to 85 °C
Si3200-KS	SOIC-16	No	0 to 70 °C
Si3200-BS	SOIC-16	No	–40 to 85 °C

Notes:
1. Add an “R” at the end of the device to denote tape and reel option; 2500 quantity per reel.
2. “X” denotes product revision.

12. Package Outline: 64-Pin eTQFP

Figure 39 illustrates the package details for the Si3232. Table 33 lists the values for the dimensions shown in the illustration.

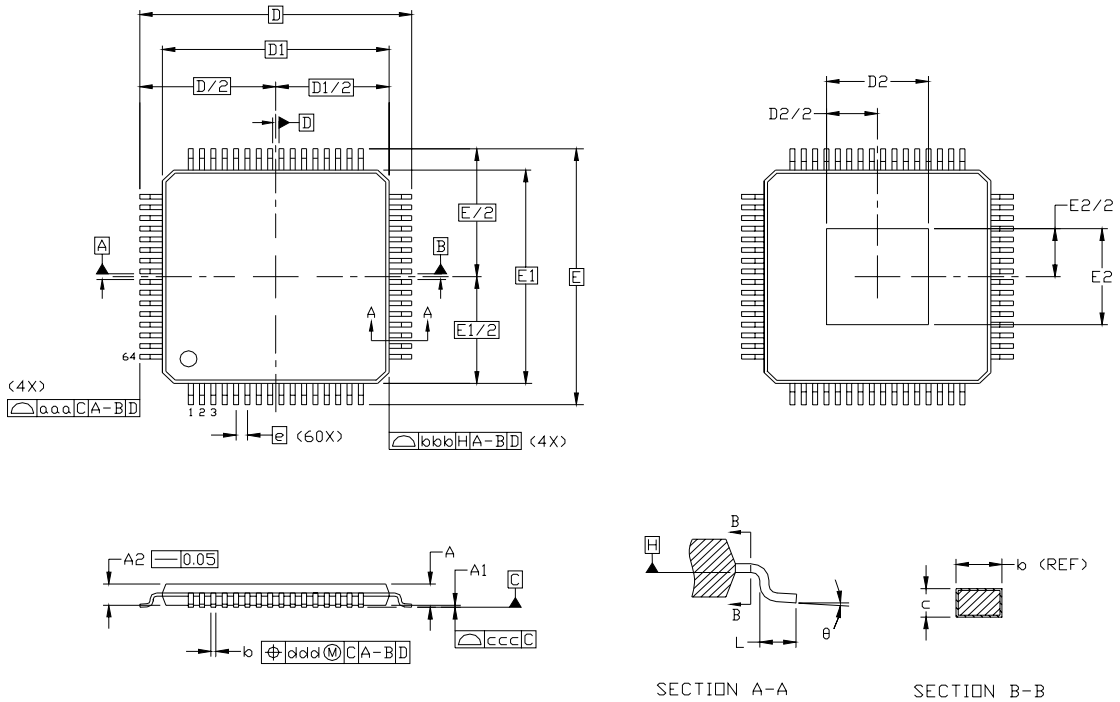

Figure 39. 64-Pin Thin Quad Flat Package (TQFP)

Table 33. 64-Pin Package Diagram Dimensions

Symbol	Millimeters		
	Min	Nom	Max
A	—	—	1.20
A1	0.05	—	0.15
A2	0.95	1.00	1.05
b	0.17	0.22	0.27
c	0.09	—	0.20
D	12.00 BSC.		
D1	10.00 BSC.		
D2	4.35	4.50	4.65
e	0.50 BSC.		

Symbol	Millimeters		
	Min	Nom	Max
E	12.00 BSC.		
E1	10.00 BSC.		
E2	4.35	4.50	4.65
L	0.45	0.60	0.75
aaa	—	—	0.20
bbb	—	—	0.20
ccc	—	—	0.08
ddd	—	—	0.08
Θ	0°	3.5°	7°

Notes:

1. All dimensions shown are in millimeters (mm) unless otherwise noted.
2. Dimensioning and Tolerancing per ANSI Y14.5M-1982.
3. This package outline conforms to JEDEC MS-026, variant ACD-HD.
4. Recommended card reflow profile is per the JEDEC/IPC J-STD-020B specification for Small Body Components.

13. Package Outline: 16-Pin ESOIC

Figure 40 illustrates the package details for the Si3201. Table 34 lists the values for the dimensions shown in the illustration.

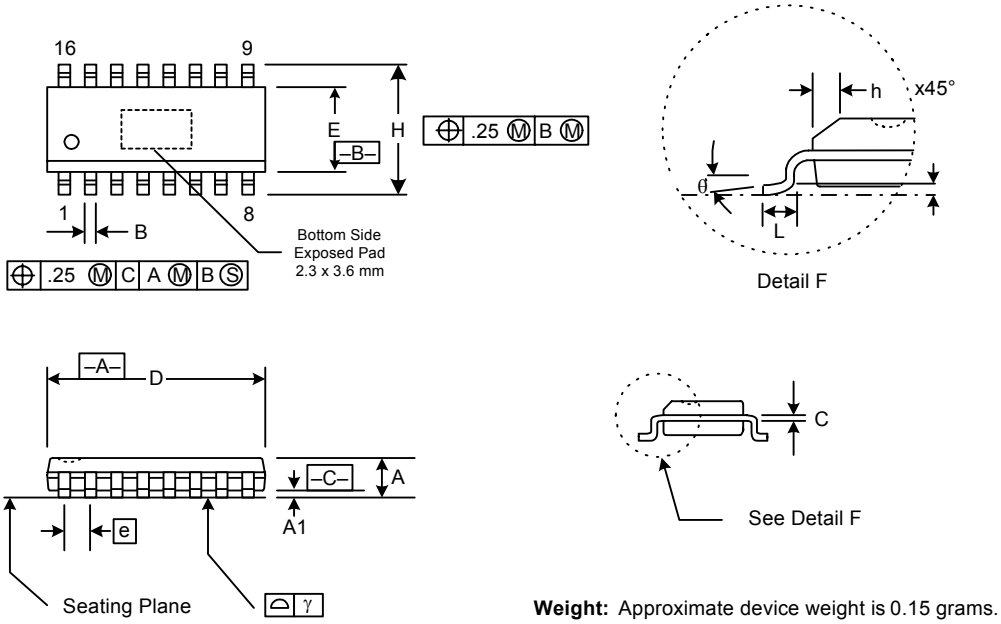

Weight: Approximate device weight is 0.15 grams.

Figure 40. 16-Pin Thermal Enhanced Small Outline Integrated Circuit (ESOIC) Package

Table 34. Package Diagram Dimensions

Symbol	Millimeters	
	Min	Max
A	1.35	1.75
A1	0	0.15
B	.33	.51
C	.19	.25
D	9.80	10.00
E	3.80	4.00
e	1.27 BSC	
H	5.80	6.20
h	.25	.50
L	.40	1.27
γ	—	0.10
θ	0º	8º

SUPPORT DOCUMENTATION

- AN55: Dual ProSLIC User Guide
- AN63: Si322x Coefficient Generator User's Guide
- AN64: Dual ProSLIC LINC User Guide
- AN68: 8-Bit Microcontroller Board Hardware Reference Guide
- AN71: Si3220/Si3225 GR-909 testing
- AN74: SiLINKPS-EVB User's Guide
- AN86: Ringing/Ringtrip Operation and Architecture on the Si3220/Si3225
- Si3232PPT0-EVB Data Sheet

Note: Refer to www.silabs.com for a current list of support documents for this chipset.

DOCUMENT CHANGE LIST

Revision 0.95 to Revision 0.96

The following changes are specific to Rev G of the Si3232 silicon:

- "4.5.2. Ground Key Detection" on page 34
  - Added descriptive text and I_{LONG} equation.
- Register , “ID: Chip Identification (Register Address 0),” on page 67
  - Added register value for Silicon Rev. G.

The following changes are corrections to Rev 0.96.

- Table 34 on page 124.
  - Corrected 16-pin ESOIC dimension A1.
- "4.5.1. Loop Closure Detection" on page 32
  - Added descriptive text and I_{LOOP} equation.
- "4.16. SPI Control Interface" on page 50
  - Added pulldown resistor description
- Added description for current limiting resistors on V_{BATH} and V_{DD} connected to the Si3200 on page 19.
- Revised "2. Typical Application Schematic" on page 17.
  - Added pulldown resistor to SDO pin.
  - Added R20–R23, C23, C24, C32, and C33 to V_{BATH} and V_{DD} of Si3200.
- Updated "11. Ordering Guide" on page 122.
- Updated 64-pin eTQFP drawing on page 123.

NOTES:

CONTACT INFORMATION

Silicon Laboratories Inc.

4635 Boston Lane
Austin, TX 78735
Tel: 1+(512) 416-8500
Fax: 1+(512) 416-9669
Toll Free: 1+(877) 444-3032

Email: ProSLICinfo@silabs.com
Internet: www.silabs.com

The information in this document is believed to be accurate in all respects at the time of publication but is subject to change without notice. Silicon Laboratories assumes no responsibility for errors and omissions, and disclaims responsibility for any consequences resulting from the use of information included herein. Additionally, Silicon Laboratories assumes no responsibility for the functioning of undescribed features or parameters. Silicon Laboratories reserves the right to make changes without further notice. Silicon Laboratories makes no warranty, representation or guarantee regarding the suitability of its products for any particular purpose, nor does Silicon Laboratories assume any liability arising out of the application or use of any product or circuit, and specifically disclaims any and all liability, including without limitation consequential or incidental damages. Silicon Laboratories products are not designed, intended, or authorized for use in applications intended to support or sustain life, or for any other application in which the failure of the Silicon Laboratories product could create a situation where personal injury or death may occur. Should Buyer purchase or use Silicon Laboratories products for any such unintended or unauthorized application, Buyer shall indemnify and hold Silicon Laboratories harmless against all claims and damages.

Silicon Laboratories, Silicon Labs, and ProSLIC are trademarks of Silicon Laboratories Inc.

Other products or brandnames mentioned herein are trademarks or registered trademarks of their respective holders.