SMTHBT200

TRISIL™ FOR LINE CARD PROTECTION

FEATURES

- BIDIRECTIONAL CROWBAR PROTECTION
- REPETITIVE PEAK PULSE CURRENT: I_{PP} = 100 A (10/1000 µs)
- HOLDING CURRENT: I_H = 150 mA
- BREAKDOWN VOLTAGE : 200V min
- BREAKOVER VOLTAGE : 265V max

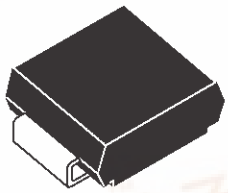

SMC

DESCRIPTION

This protection device has been especially designed to protect subscriber line cards using SLICS without integrated ring generators. The SMTHBT200 device protects ring generator relays against transient

SCHEMATIC DIAGRAM

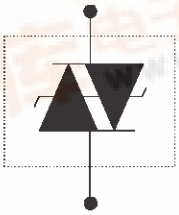

IN ACCORDANCE WITH THE FOLLOWING STANDARDS :

- CCITT K20:	10/700 µs	4 kV
	5/310 µs	100 A
- VDE 0433:	10/700 µs	4 kV
	5/310 µs	100 A
- VDE 0878:	1.2/50 µs	4 kV
	1/20 µs	100 A
- FCC Part 68:	2/10 µs	2.5 kV
BELLCORE TR-NWT-001089:	2/10 µs	500 A
- BELLCORE TR-NWT-000974:	10/1000 µs	1 kV
	10/1000 µs	100 A

THERMAL RESISTANCES

Symbol	Parameter	Value	Unit
$R_{th(j-l)}$	Junction to leads	10	°C/W
$R_{th(j-a)}$	Junction to ambient on printed circuit (with standard footprint dimensions)	75	°C/W

ABSOLUTE MAXIMUM RATINGS (T_{amb} = 25°C, unless otherwise specified)

Symbol	Parameter		Value	Unit
I_{pp}	Peak pulse current: 10/1000 µs (open circuit voltage waveform 10/1000 µs) 8/20 µs (open circuit voltage waveform 4kV 1.2/50 µs)		 100 250	 A A
I_{TSM}	Non repetitive surge peak on-state current	tp = 20ms	55	A
dV/dt	Critical rate of rise of off-state voltage	V_{RM}	5	KV/µs
T_L	Maximum lead temperature for soldering during 10s		260	°C
T_{stg} Tj	Storage temperature range Maximum junction temperature		- 55 to + 150 150	°C °C

Note 1: Pulse waveform

10 / 1000 µs	tr = 10 µs	tp = 1000 µs
8 / 20 µs	tr = 8 µs	tp = 20 µs
5 / 310 µs	tr = 5 µs	tp = 310 µs
1 / 20 µs	tr = 1 µs	tp = 20 µs
2 / 10 µs	tr = 2 µs	tp = 10 µs

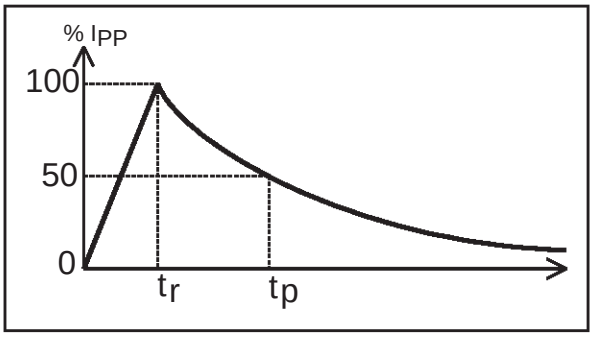

ELECTRICAL CHARACTERISTICS (T_{amb} = 25°C)

Symbol	Parameter
V_{RM}	Stand-off voltage
I_{RM}	Leakage current at stand-off voltage
V_R	Continuous Reverse voltage
V_{BR}	Breakdown voltage
V_{BO}	Breakover voltage
I_H	Holding current
I_{BO}	Breakover current
I_{PP}	Peak pulse current
C	Capacitance

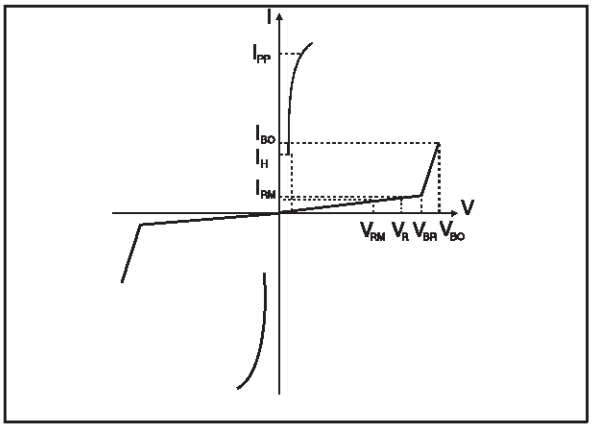

STATIC PARAMETERS

Type	I_{RM} @ V_{RM} max.		I_R @ V_R max. note 1		V_{BO} max. max.	@ I_{BO} min. note 2		I_H min. note 3	C max. note 4
	µA	V	µA	V	V	mA	mA	mA	pF
SMTHBT200	10	180	50	200	265	150	800	150	150

Note 2 : I_R measured at V_R guarantees $V_{BR}>V_R$
Note 2 : Measured at 50Hz, see test circuit 1.
Note 3 : See functional holding current test circuit 2.
Note 4 : V_R=1V bias, V_{RMS}=1V, F=1MHz.

TEST CIRCUIT 1 FOR I_{BO} and V_{BO} parameters :

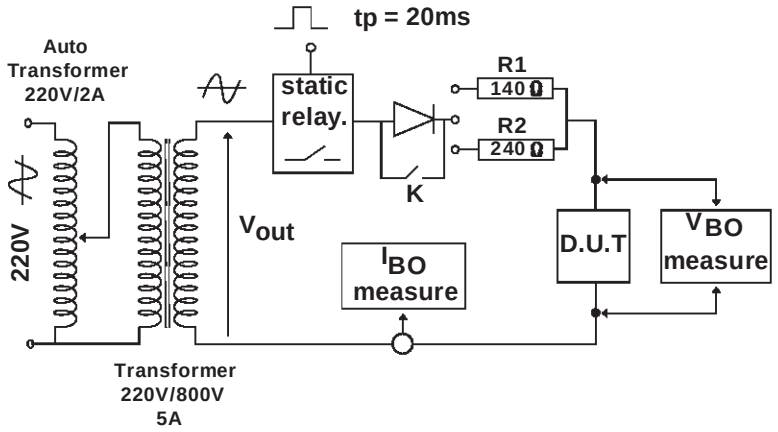

TEST PROCEDURE :

Pulse Test duration (tp = 20ms):
- For Bidirectional devices = Switch K is closed
- For Unidirectional devices = Switch K is open.

V_{OUT} Selection
- Device with $V_{BO} < 200$ Volt
  - $V_{OUT} = 250\ V_{RMS}$, $R_1 = 140\ \Omega$.
- Device with $V_{BO} \geq 200$ Volt
  - $V_{OUT} = 480\ V_{RMS}$, $R_2 = 240\ \Omega$.

TEST CIRCUIT 2 for I_H parameter.

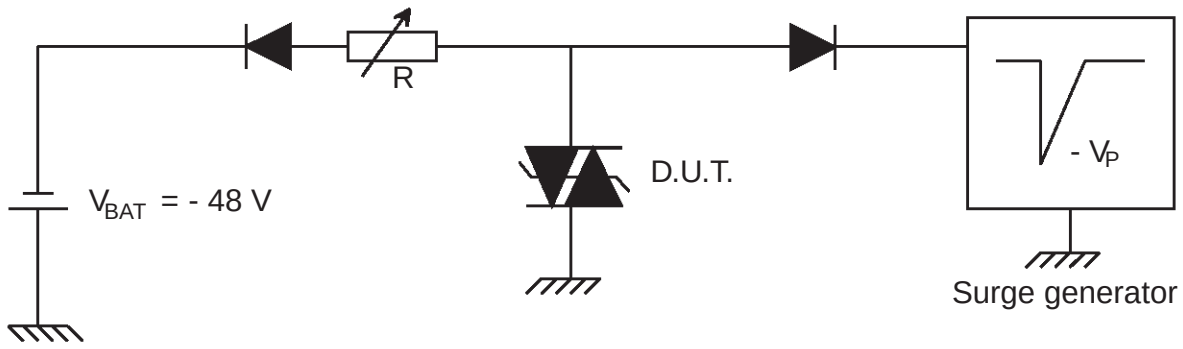

This is a GO-NO GO test which allows to confirm the holding current (I_H) level in a functional test circuit.

TEST PROCEDURE :

- Adjust the current level at the I_H value by short circuiting the D.U.T.
- Fire the D.U.T. with a surge current : I_{pp} = 10A, 10/1000 µs.
- The D.U.T. will come back to the off-state within 50 ms max.

Fig 1 : Non repetitive surge peak on-state current versus overload duration (T_j initial = 25 °C).

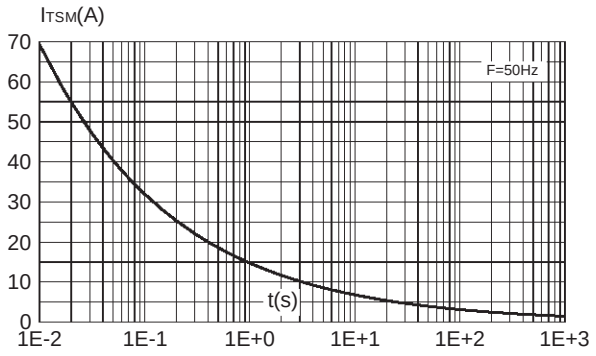

Fig 2 : On-state voltage versus on-state current (typical values).

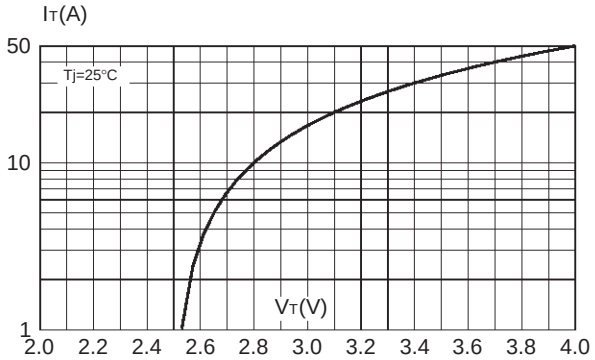

Fig 3 : Relative variation of holding current versus junction temperature.

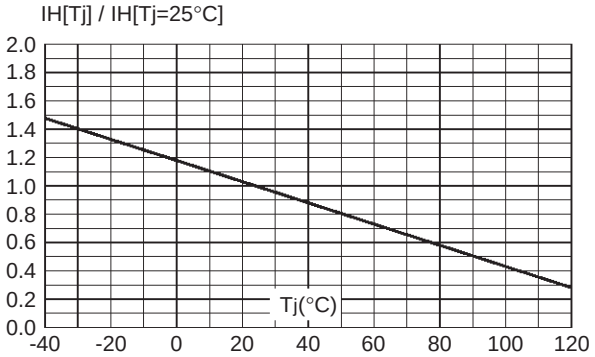

Fig 4 : Variation of thermal impedance junction to ambient versus pulse duration.

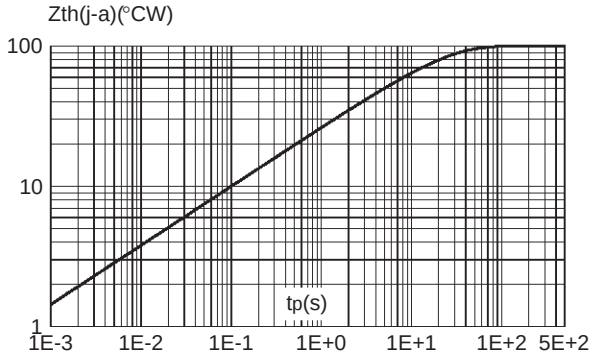

Fig 5 : Relative variation of junction capacitance versus reverse voltage applied (typical values).

Note : For VBR upper than 62 V, the curve can be extrapolated (dotted line)

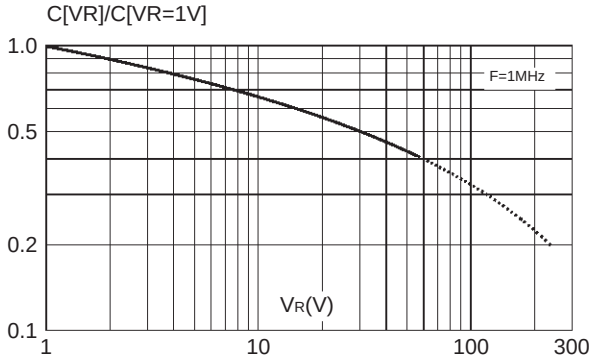

PACKAGE MECHANICAL DATA

SMC (Plastic)

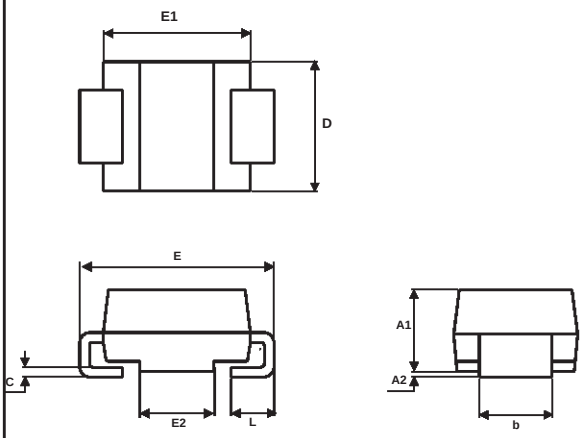

REF.	DIMENSIONS			
	Millimeters		Inches	
	Min.	Max.	Min.	Max.
A1	1.90	2.45	0.075	0.096
A2	0.05	0.20	0.002	0.008
b	2.90	3.2	0.114	0.126
c	0.15	0.41	0.006	0.016
E	7.75	8.15	0.305	0.321
E1	6.60	7.15	0.260	0.281
E2	4.40	4.70	0.173	0.185
D	5.55	6.25	0.218	0.246
L	0.75	1.60	0.030	0.063

FOOT PRINT (in millimeters)

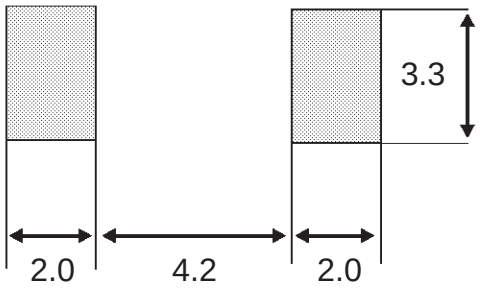

Packaging: tape and reel

MARKING

Package	Type	Marking
SMC	SMTHBT200	WO4