查询SP5611供应商 捷多邦，专业PCB打样工厂，24小时加急出货

MITEL SEMICONDUCTOR

SP5611

1·3GHz Bidirectional I²C Bus Controlled Synthesiser

Advance Information

Supersedes February 1997 version, DS3758-4.1

DS3758 - 5.0 June 1998

The SP5611 is a single chip frequency synthesiser designed for TV tuning systems. Control data is entered in the standard I²C BUS format. The device contains 4 addressable bidirectional open collector ports, one of which is a 3-bit ADC. The information on these ports can be read via the I²C BUS. the device has 4 programmable addresses, programmed by applying a specific input voltage to the P3 address select input. This enables two or more synthesisers to be used in a system.

FEATURES

- Complete 1·3GHz Single Chip System
- High Sensitivity RF Inputs
- Programmable via I²C BUS
- Low Power Consumption (5V, 20mA)
- Low Radiation
- Phase Lock Detector
- Varactor Drive Amp Disable
- 4 Bi-directional Controllable Outputs
- 5-Level ADC
- Variable I²C BUS Address for Multi-tuner Applications
- ESD Protection: 4kV, Mil-Std-883C, Method 3015 (1)
- Switchable ÷512/1024 Reference Divider
- Pin and Function Compatible with SP5511S (2)

(1) Normal ESD handling precautions should be observed.

(2) The SP5511S does not have a switchable reference division ratio.

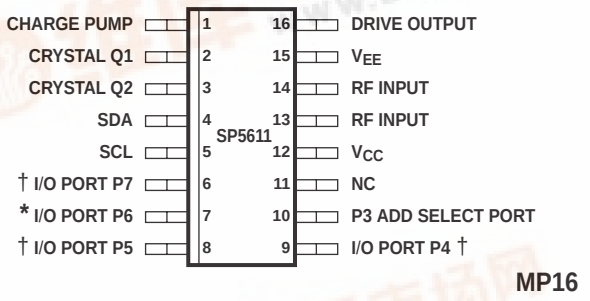

† = Logic level I/O port
* = 3-bit ADC input

Fig. 1 Pin connections – top view

APPLICATIONS

- Satellite TV
- Cable Tuning Systems
- VCRs

THERMAL DATA

θ_{JC} = 41°C/W
θ_{JA} = 111°C/W

ORDERING INFORMATION

SP5611 KG/MPAS (Tubes)
SP5611S KG/MPAD (Tape and reel)

找PDF 维库一下 pdf.dzsc.com

ELECTRICAL CHARACTERISTICS

T_{AMB} = −40°C to +85°C, V_{CC} = +4·5V to +5·5V, reference frequency = 4MHz.
These Characteristics are guaranteed by either production test or design. They apply within the specified ambient temperature and supply voltage ranges unless otherwise stated.

Characteristic	Pin	Value			Units	Conditions
		Min.	Typ.	Max.		
Supply current	12		20	27	mA	V_{CC} = 4·5V to 5·5V (note 1)
Prescaler input voltage	13,14	12·5		300	mVrms	50MHz to 1·3GHz sinewave, see Fig. 5
Prescaler input impedance	13,14		50		Ω	
Prescaler input capacitance	13, 14		2		pF	
SDA, SCL						
Input high voltage	4,5	3		5·5	V	
Input low voltage	4,5	0		1·5	V	
Input high current	4,5			10	µA	Input voltage = V_{CC}
Input low current	4,5			−10	µA	Input voltage = 0V
Leakage current	4,5			10	µA	When V_{CC} = 0V
SDA						
Output voltage	4			0·4	V	Sink current = 3mA
Charge pump current low	1		±50		µA	Byte 4, bit 2 = 0, pin 1 = 2V
Charge pump current high	1		±170		µA	Byte 4, bit 2 = 1, pin 1 = 2V
Charge pump output leakage current	1			±5	nA	Byte 4, bit 4 = 1, pin 1 = 2V
Charge pump drive output current	16	500			µA	V pin 16 = 0·7V
Charge pump amplifier gain			6400			
Recommended crystal series resistance		10		200	Ω	Parallel resonant crystal (note 2)
Crystal oscillator drive level	2		80		mV p-p	
Crystal oscillator negative resistance	2	750	1000		Ω	
External reference input frequency	2	2		8	MHz	AC coupled sinewave
External reference input amplitude	2	70		200	mVrms	AC coupled sinewave
Output Ports						
P4-P7 sink current	9-6	10			mA	V_{OUT} = 0·7V
P4-P7 leakage current	9-6			10	µA	V_{OUT} = 13·2V
Input Ports						
P3 input current high	10			1	mA	V pin 10 = V_{CC}
P3 input current low	10			−0·5	mA	V pin 10 = 0V
P4, P5, P7 input voltage low	9,8,6			0·8	V	
P4, P5, P7 input voltage high	9,8,6	2·7			V	
P6 input current high	7			+10	µA	See Table 3 for ADC levels
P6 input current low	7			−10	µA	

NOTES
1. Maximum power consumption is 150mW with V_{CC} = 5·5V and all ports off.
2. Resistance specified is maximum under all conditions.

ABSOLUTE MAXIMUM RATINGS

All voltages are referred to V_{EE} and pin 3 at 0V

Parameter	Pin	Value		Units	Conditions
		Min.	Max.		
Supply voltage	12	−0·3	7	V	
RF input voltage	13,14		2·5	V p-p	
Port voltage	6-9	−0·3	14	V	Port in off state
	6-9	−0·3	6	V	Port in on state
Total port output current	6-9		50	mA	
Address select voltage	10	−0·3	V_{CC}+0·3	V	
RF input DC offset	13-14	−0·3	V_{CC}+0·3	V	
Charge pump DC offset	1	−0·3	V_{CC}+0·3	V	
Drive output DC offset	16	−0·3	V_{CC}+0·3	V	
Crystal oscillator DC offset	2	−0·3	V_{CC}+0·3	V	
SDA, SCL input voltage	4,5	−0·3	V_{CC}+0·3	V	
		−0·3	6	V	
Storage temperature		−55	+150	°C	
Junction temperature			+150	°C	

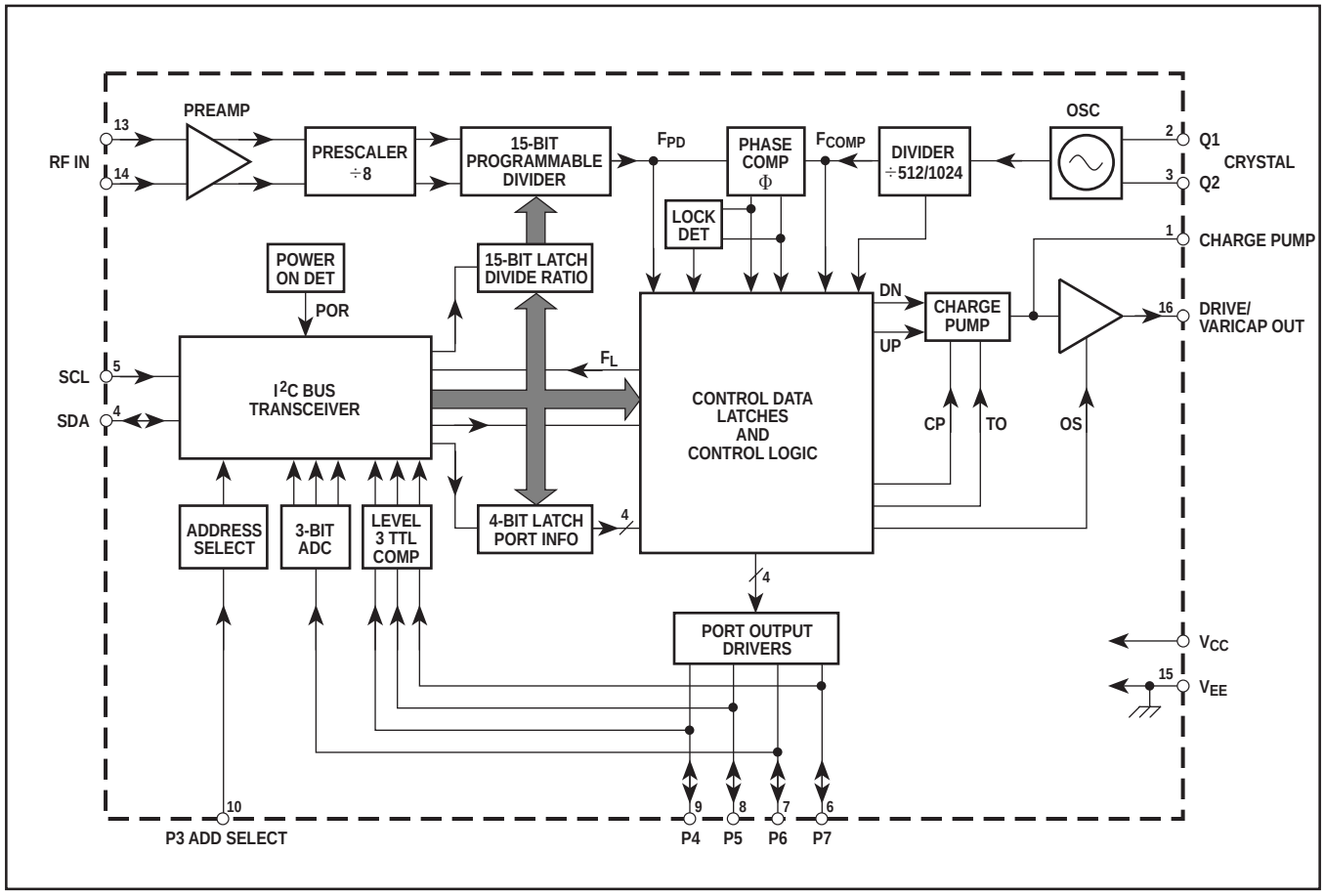

Fig. 2 Block diagram

FUNCTIONAL DESCRIPTION

The SP5611 is programmed from an I^2C Bus. Data and Clock are fed in on the SDA and SCL lines respectively, as defined by the I^2C Bus format. The synthesiser can either accept new data (write mode) or send data (read mode). The LSB of the address byte (R/W) sets the device into write mode if it is low and read mode if it is high. The Tables in Fig. 3 illustrate the format of the data. The device can be programmed to respond to several addresses, which enables the use of more than one synthesiser in an I^2C Bus system. Table 4 shows how the address is selected by applying a voltage to P3.

When the device receives a correct address byte, it pulls the SDA line low during the acknowledge period, and during following acknowledge periods after further data bytes are programmed. When the device is programmed into the read mode, the controller accepting the data must pull the SDA line low during all status byte acknowledge periods to read another status byte. If the controller fails to pull the SDA line low during this period, the device generates an internal STOP condition, which inhibits further reading.

WRITE Mode (Frequency Synthesis)

When the device is in write mode bytes 2 and 3 select the synthesised frequency, while bytes 4 and 5 control the output port states, charge pump, reference divider ratio and various test modes.

Once the correct address is received and acknowledged, the first bit of the next byte determines whether that byte is interpreted as byte 2 or 4; a logic 0 for frequency information and a logic 1 for control and output port information. When byte 2 is received the device always expects byte 3 next. Similarly, when byte 4 is received the device expects byte 5 next. Additional data bytes can be entered without the need to re-address the device until an I^2C stop condition is recognised. This allows a smooth frequency sweep for fine tuning or AFC purposes.

If the transmission of data is stopped mid-byte (for example, by another device on the bus) then the previously programmed byte is maintained.

Frequency data from bytes 2 and 3 are stored in a 15-bit register and used to control the division ratio of the 15-bit programmable divider. This is preceded by a divide-by-8 prescaler and amplifier to give excellent sensitivity at the local oscillator input, see Fig. 5. The input impedance is shown in Fig. 7.

The programmed frequency can be calculated by multiplying the programmed division ratio by 8 times the comparison frequency F_{COMP}. When frequency data is entered, the phase comparator, via a charge pump and varicap drive amplifier, adjusts the local oscillator control voltage until the output of the programmable divider is frequency and phased locked to the comparison frequency.

The reference frequency may be generated by an external source capacitively coupled into pin 2, or provided by an on-chip crystal controlled oscillator. The comparison frequency F_{COMP} is derived from the reference frequency via the reference divider. The reference divider division ratio is switchable from 512 to 1024, and is controlled by bit 7 of byte 4 (TS0); a logic 1 to 512, a logic 0 for 1024. The SP5611 differs from the SP5511 in this respect, only 512 being available on the SP5511. Note that the comparison frequency is 7·8125kHz when a 4MHz reference is used, and divide by 512 is selected.

Bit 2 of byte 4 of the programming data (CP) controls the current in the charge pump circuit, a logic 1 for ±170µA and a logic 0 for ±50µA, allowing compensation for the variable tuning slope of the tuner and also to enable fast channel changes over the full band. When the device is frequency locked, the charge pump current is internally set to ±50µA regardless of CP.

Bit 4 of byte 4 (T0) disables the charge pump when it is set to a logic 1.

Bit 8 of byte 4 (OS) switches the charge pump drive amplifier's output off when it is set to a logic 1.

Bit 3 of byte 4 (T1) enables various test modes when set high. These modes are selected by bits 5, 6 and 7 of byte 4 (TS2, and TS1, TS0) as detailed in Table 5. When T1 is set low, TS2 and TS1 are assigned a 'don't care' condition, and TS0 selects the reference divider ratio as previously described.

Byte 5 programs the output ports P4 to P7; a logic 0 for a high impedance output and a logic 1 for low impedance (on).

READ Mode

When the device is in read mode the status byte read from the device on the SDA line takes the form shown in Table 2.

Bit 1 (POR) is the power-on reset indicator and is set to a logic 1 if the V_{CC} supply to the device has dropped below 3V (at 25˚C), for example, when the device is initially turned on. The POR is reset to 0 when the read sequence is terminated by a stop command. When POR is set high (at low V_{CC}), the programmed information is lost and the output ports are all set to high impedance.

Bit 2 (FL) indicates whether the device is phase locked, a logic 1 is present if the device is locked, and a logic 0 if the device is unlocked.

Bits 3, 4 and 5 (I2, I1, I0) show the status of the I/O Ports P7, P5 and P4 respectively. A logic 0 indicates a low level and a logic 1 a high level. If the ports are to be used as inputs they should be programmed to a high impedance state (logic 1). These inputs will then respond to data complying with TTL type voltage levels.

Bits 6, 7 and 8 (A2, A1, A0) combine to give the output of the 5-level ADC. The ADC can be used to feed AFC information to the microprocessor from the IF section of the receiver, as illustrated in the typical application circuit.

APPLICATION

A typical application is shown in Fig. 4. All input/output interface circuits are shown in Fig. 6. The SP5611 is function and pin equivalent to the SP5511 device apart from the switchable reference divider, and has much lower power dissipation, improved RF sensitivity and better ESD performance.

	MSB							LSB		
Address	1	1	0	0	0	MA1	MA0	0	A	**Byte 1**
Programmable divider	0	2^{14}	2^{13}	2^{12}	2^{11}	2^{10}	2^{9}	2^{8}	A	**Byte 2**
Programmable divider	2^{7}	2^{6}	2^{5}	2^{4}	2^{3}	2^{2}	2^{1}	2^{0}	A	**Byte 3**
Charge pump and test bits	1	CP	T1	T0	TS2	TS1	TS0	OS	A	**Byte 4**
I/O port control bits	P7	P6	P5	P4	X	X	X	X	A	**Byte 5**

Table 1 Write data format (MSB transmitted first)

Address	1	1	0	0	0	MA1	MA0	1	A	**Byte 1**
Status byte	POR	FL	I2	I1	I0	A2	A1	A0	A	**Byte 2**

Table 2 Read data format

A2	A1	A0	Voltage input to P6
1	0	0	$0{\cdot}6V_{CC}$ to 13·2V
0	1	1	$0{\cdot}45V_{CC}$ to $0{\cdot}6V_{CC}$
0	1	0	$0{\cdot}3V_{CC}$ to $0{\cdot}45V_{CC}$
0	0	1	$0{\cdot}15V_{CC}$ to $0{\cdot}3V_{CC}$
0	0	0	0V to $0{\cdot}15V_{CC}$

Table 3 ADC levels

MA1	MA0	Address select input voltage
0	0	0V to $0{\cdot}1V_{CC}$
0	1	Open circuit
1	0	$0{\cdot}4V_{CC}$ to $0{\cdot}6V_{CC}$
1	1	$0{\cdot}9V_{CC}$ to V_{CC}

Table 4 Address selection

T1	TS2	TS1	TS0	Operation mode description
0	X	X	0	Normal operation, test modes disabled, reference divider ratio = 1024
0	X	X	1	Normal operation, test modes disabled, reference divider ratio = 512
1	0	0	X	Charge pump source (down). Status bit FL set to 0
1	0	1	X	Charge pump sink (up). Status bit FL set to 1
1	1	0	0	Ports P4, P5, P6, P7set to state X
1	1	0	1	Port P7 = $F_{PD}/2$; P4, P5, P6 set to state X
1	1	1	X	Port P7 = F_{PD}; P6 = F_{COMP}; P4, P5 set to state X

Table 5 Operation modes

NOTES
X = don't care
For further details of test modes, see Table 6

A	:	Acknowledge bit
MA1, MA0	:	Variable address bits (see Table 4)
CP	:	Charge Pump current select
T1	:	Test mode selection
T0	:	Charge pump disable
TS2, TS1, TS0	:	Operation mode control bits (see Table 5)
OS	:	Varactor drive Output disable Switch
P7, P6, P5, P4,	:	Control output port states
POR	:	Power On Reset indicator
FL	:	Phase lock detect flag
I2, I1, I0	:	Digital information from ports P7, P5 and P4 respectively
A2, A1, A0	:	5-level ADC data from P6 (see Table 3)
X	:	Don't care

Fig. 3 Data formats

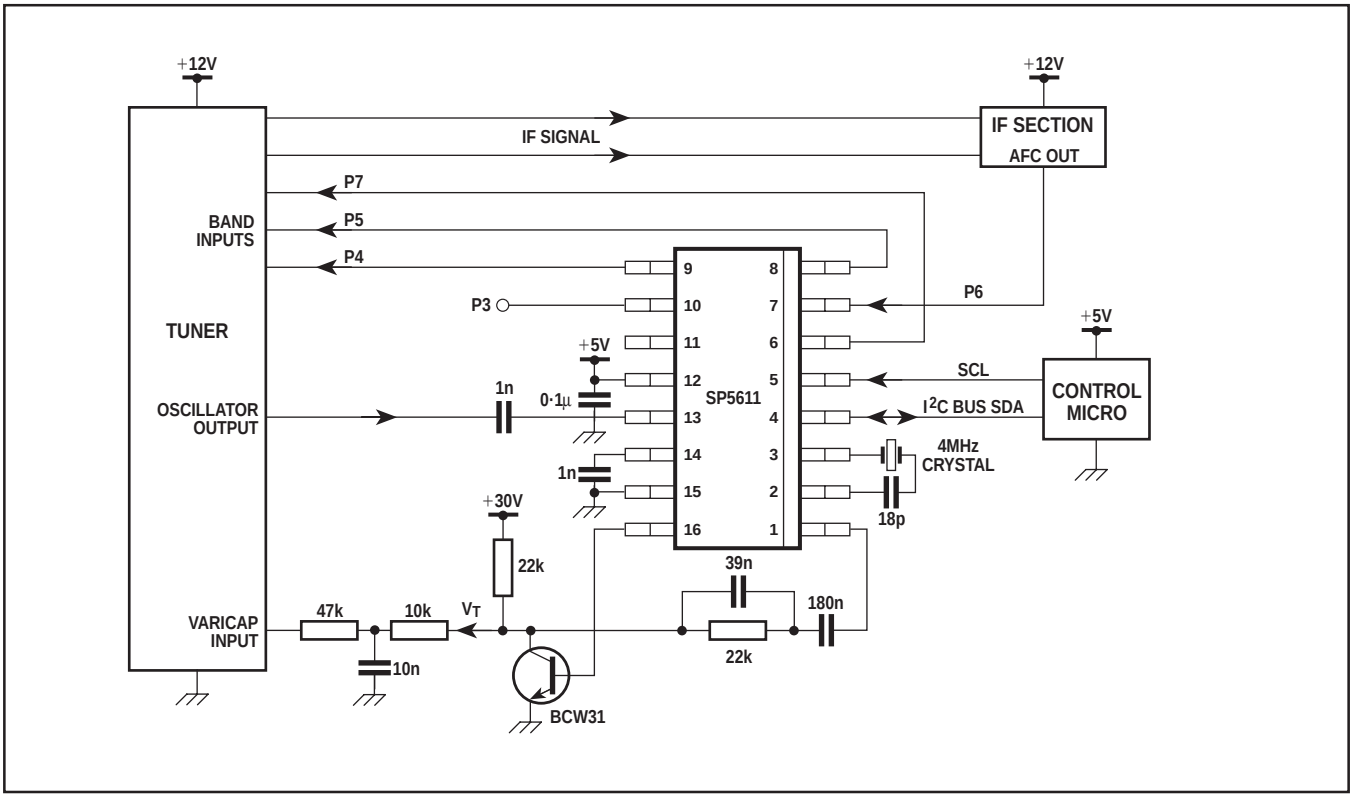

Fig. 4 Typical application

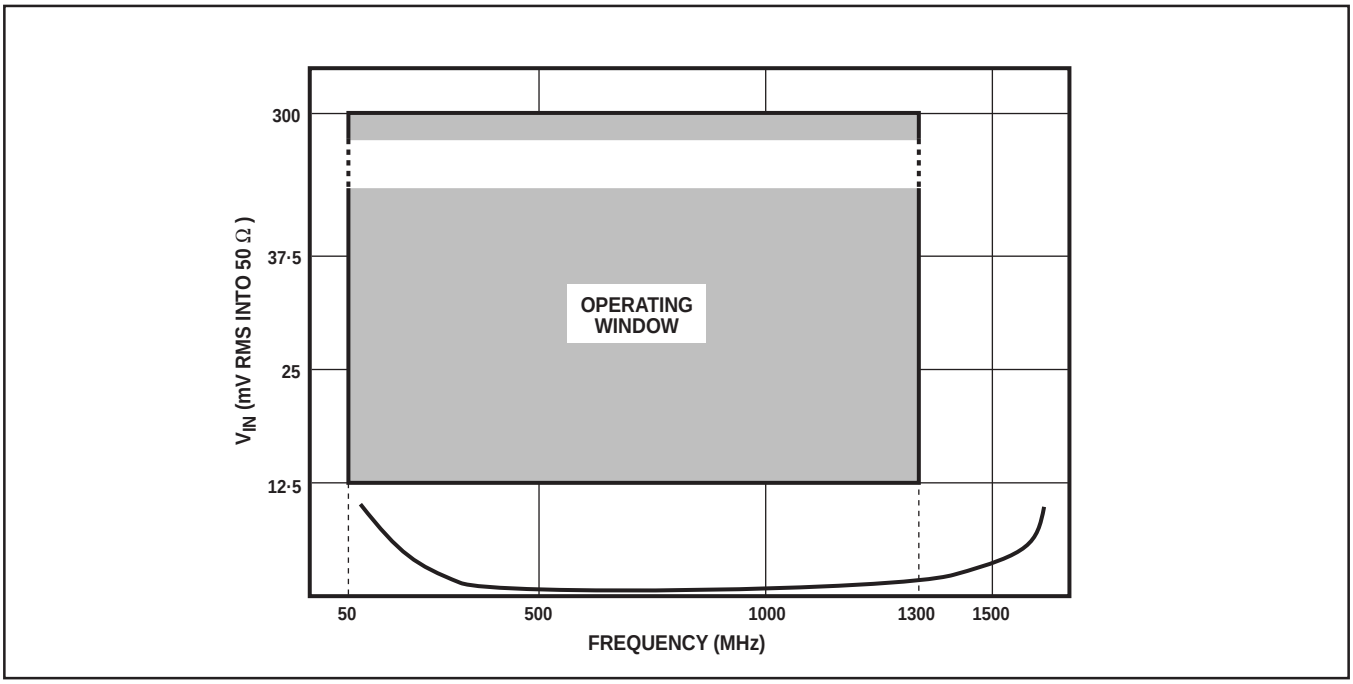

Fig. 5 Typical input sensitivity

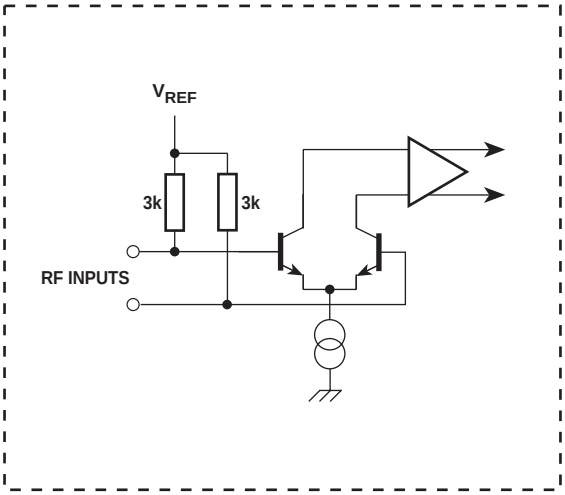

RF input

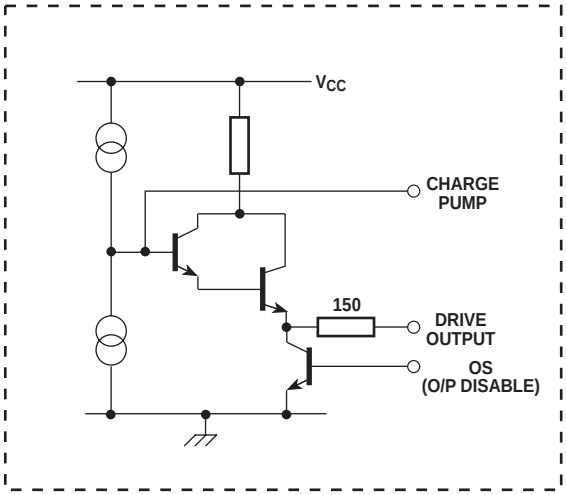

Loop amplifier

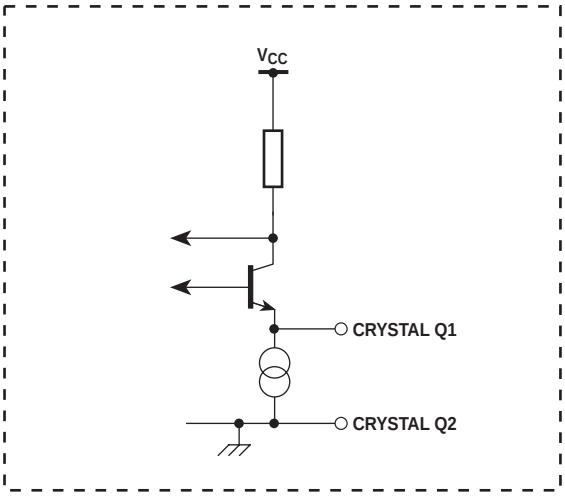

Reference oscillator

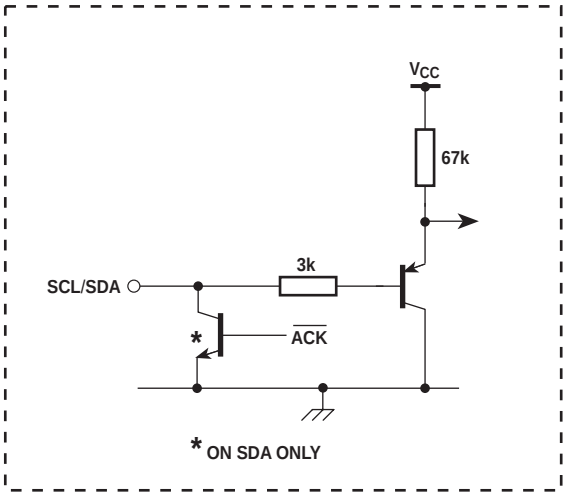

SCL and SDA inputs

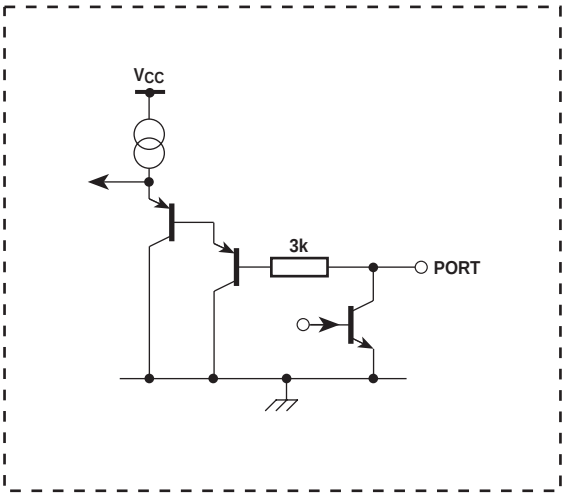

Ports P7-P4

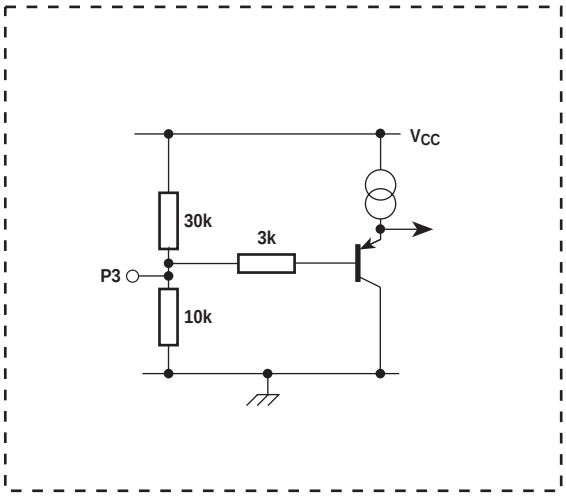

P3 address select

Fig. 6 SP5611 input/output interface circuits

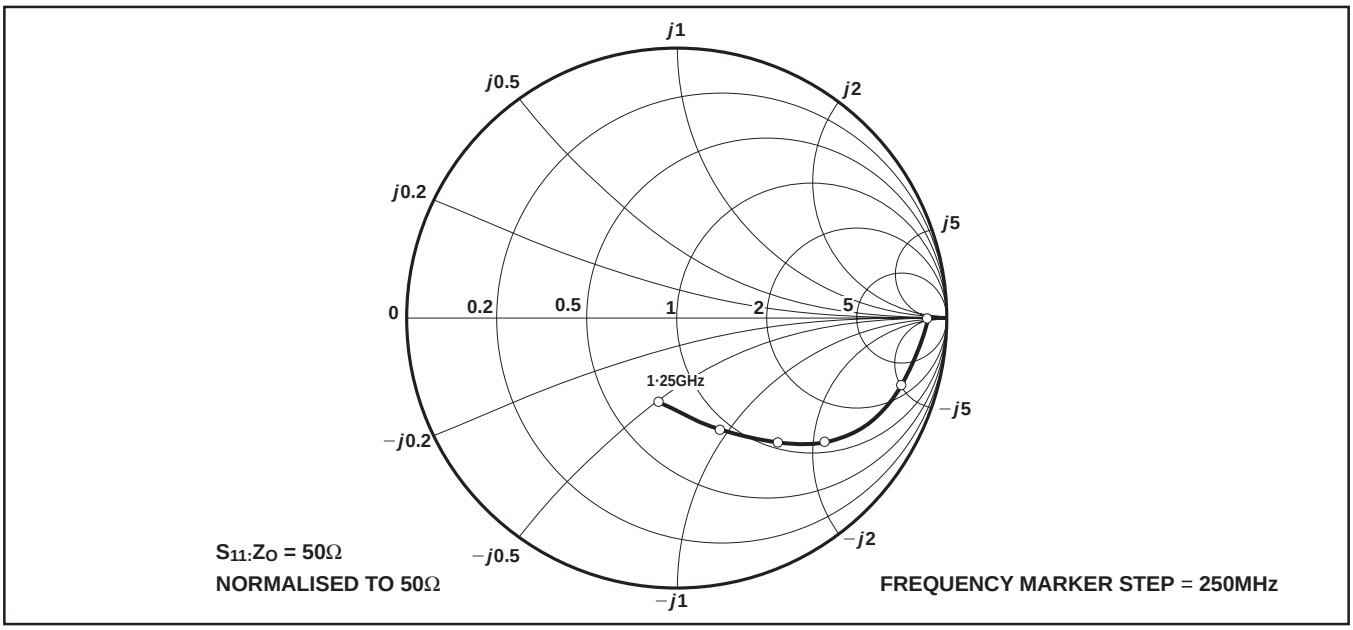

Fig. 7 Typical input impedance,

APPLICATION NOTES

An application note, AN168, is available for designing with synthesisers such as the SP5611. It covers aspects such as loop filter design, decoupling and I²C bus radiation problems.

The application note is published in the Mitel Semiconductor Media IC Handbook. A generic test/demonstration board has been produced, which can be used for the SP5611. A circuit diagram and layout for the board are shown in Figs. 8 and 9.

The board can be used for the following purposes:

(A) Measuring RF sensitivity perfomance
(B) Indicating port function
(C) Synthesising a voltage controlled oscillator
(D)Testing external reference sources

The programming codes relevant to these tests are given in Table 6.

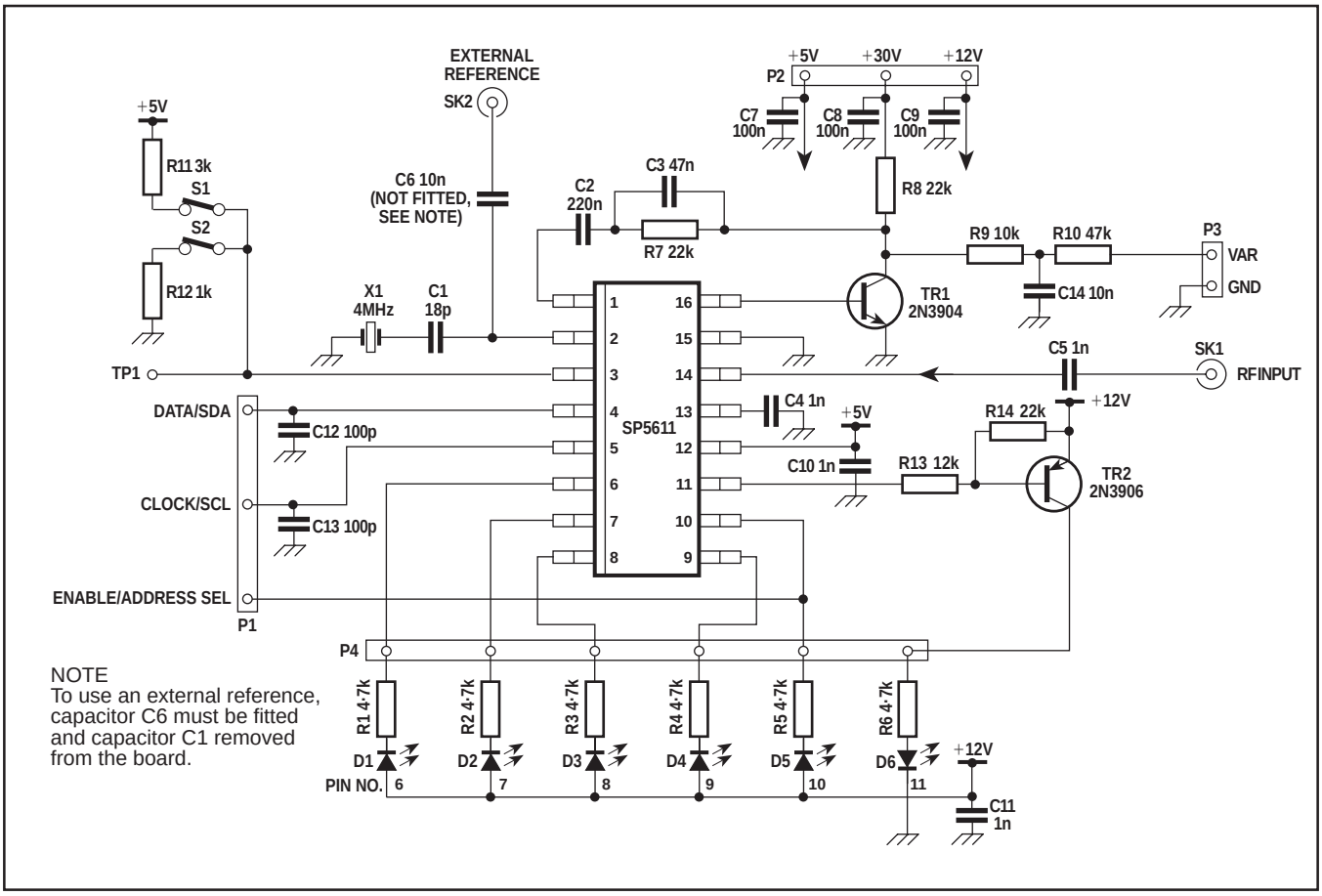

Fig. 8 Test board circuit

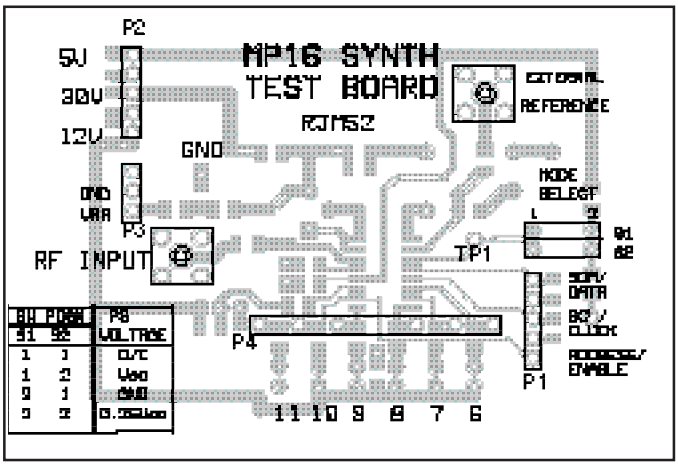

TP1 = PIN 3 DC BIAS

Top view (ground plane)

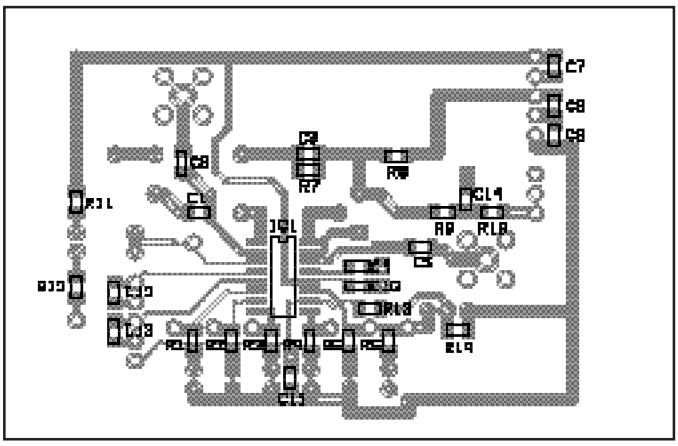

Underside (surface mounted components side)

NOTES
1. CIRCUIT SCHEMATIC IS SHOWN IN FIG. 8
2. ALL SUFACE MOUNT COMPONENTS ARE MOUNTED ON UNDERSIDE OF BOARD

Fig. 9 Test board layout

TEST MODES

As explained in the functional description, The SP5611 can be programmed into a numb er of test modes. These are invoked by programming Hex codes into byte 4, those most commonly used being shown in Table 6.

Other codes will also apply due to don't care conditions, which are assumed to be 1 in the Table.

NOTE:
When looking at F_{PD} or F_{COMP} signals from ports P7 and P6. byte should be sent twice, first to set the desired reference division ratio then to switch on the chosen test mode.
The pulses can then be measured by simply connecting an oscilloscope or counter to the relevant output pin on the test board.

Operation mode description	Hex code (byte 4)	
	CP high mode	CP low mode
Normal operation, reference divider ratio = 1024	CC	8C
Normal operation, reference divider ratio = 512	CE	8E
Charge pump source (down), FL set to 0	E2	A2
Charge pump sink (up), FL set to 1	E6	A6
Port P7 = $F_{PD}/2$	EA	AA
Port P7 = F_{PD}, P6 = F_{COMP}	EE	AE
Charge pump disable, reference divider ratio = 512	DE	9E
Varactor line disable, reference divider ratio = 512	CF	8F
Charge pump and varactor linedisable, reference divider ratio = 512	DF	9F

Table 5 Operation modes

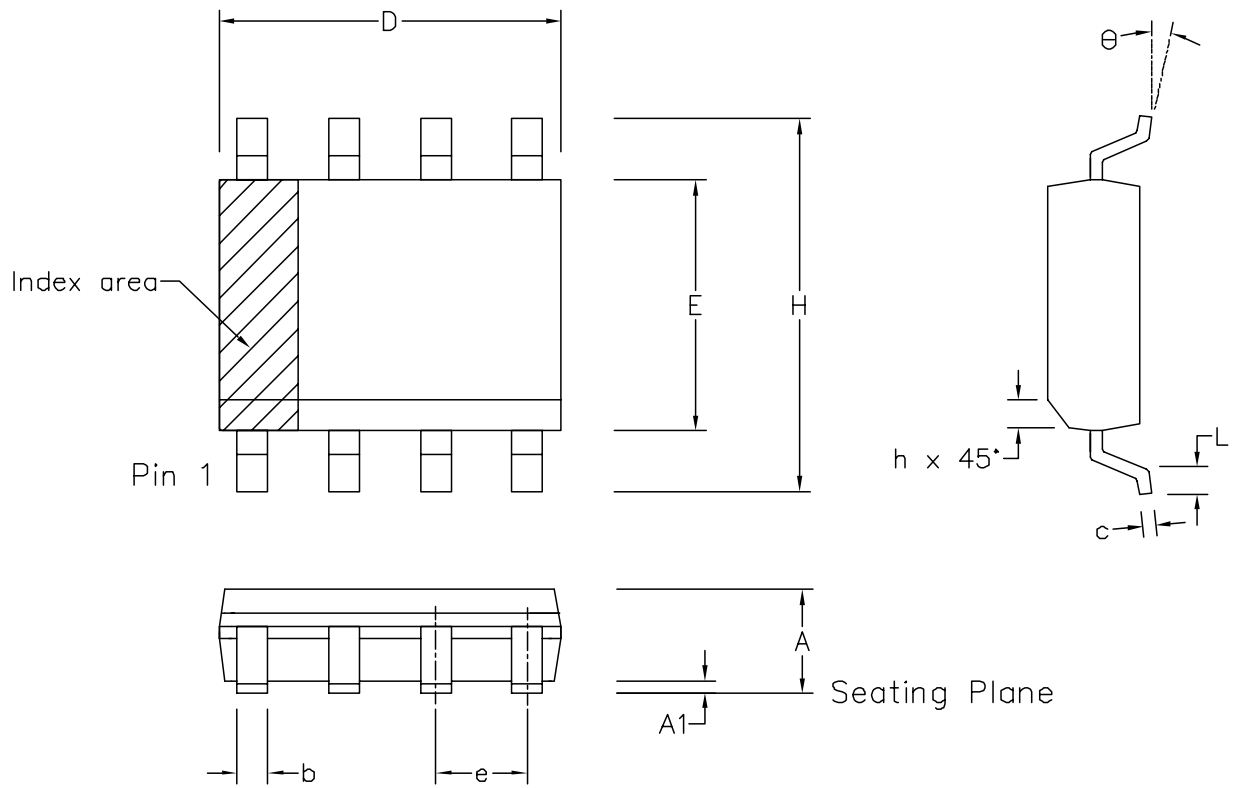

	Min mm	Max mm	Min inch	Max inch
A	1.35	1.75	0.053	0.069
A1	0.10	0.25	0.004	0.010
D	9.80	10.00	0.386	0.394
H	5.80	6.20	0.228	0.244
E	3.80	4.00	0.150	0.157
L	0.40	1.27	0.016	0.050
e	1.27 BSC		0.050 BSC	
b	0.33	0.51	0.013	0.020
c	0.19	0.25	0.008	0.010
O	0°	8°	0°	8°
h	0.25	0.50	0.010	0.020
	Pin Features			
N	16		16	
Conforms to JEDEC MS-012AC Iss. C				

Notes:
1. The chamfer on the body is optional. If it not present, a visual index feature, e.g. a dot, must be located within the cross-hatched area.
2. Controlling dimension are in inches.
3. Dimension D do not include mould flash, protusion or gate burrs. These shall not exceed 0.006" per side.
4. Dimension E1 do not include inter-lead flash or protusion. These shall not exceed 0.010" per side.
5. Dimension b does not include dambar protusion/intrusion. Allowable dambar protusion shall be 0.004" total in excess of b dimension.

© Mitel

ORIGINATING SITE: SWINDON

ISSUE	1	2	3	4	
ACN	006745	201938	202597	203706	
DATE	7APR95	27FEB97	12JUN97	9DEC97	
APPROVED					

MITEL SEMICONDUCTOR

Title: Package Outline Drawing for 16 lds SOIC(N)-0.150" Body Width (

Drawing Number
GPD00012

MITEL SEMICONDUCTOR

http://www.mitelsemi.com

World Headquarters - Canada
Tel: +1 (613) 592 2122
Fax: +1 (613) 592 6909

North America
Tel: +1 (770) 486 0194
Fax: +1 (770) 631 8213

Asia/Pacific
Tel: +65 333 6193
Fax: +65 333 6192

Europe, Middle East, and Africa (EMEA)
Tel: +44 (0) 1793 518528
Fax: +44 (0) 1793 518581

Information relating to products and services furnished herein by Mitel Corporation or its subsidiaries (collectively "Mitel") is believed to be reliable. However, Mitel assumes no liability for errors that may appear in this publication, or for liability otherwise arising from the application or use of any such information, product or service or for any infringement of patents or other intellectual property rights owned by third parties which may result from such application or use. Neither the supply of such information or purchase of product or service conveys any license, either express or implied, under patents or other intellectual property rights owned by Mitel or licensed from third parties by Mitel, whatsoever. Purchasers of products are also hereby notified that the use of product in certain ways or in combination with Mitel, or non-Mitel furnished goods or services may infringe patents or other intellectual property rights owned by Mitel.

This publication is issued to provide information only and (unless agreed by Mitel in writing) may not be used, applied or reproduced for any purpose nor form part of any order or contract nor to be regarded as a representation relating to the products or services concerned. The products, their specifications, services and other information appearing in this publication are subject to change by Mitel without notice. No warranty or guarantee express or implied is made regarding the capability, performance or suitability of any product or service. Information concerning possible methods of use is provided as a guide only and does not constitute any guarantee that such methods of use will be satisfactory in a specific piece of equipment. It is the user's responsibility to fully determine the performance and suitability of any equipment using such information and to ensure that any publication or data used is up to date and has not been superseded. Manufacturing does not necessarily include testing of all functions or parameters. These products are not suitable for use in any medical products whose failure to perform may result in significant injury or death to the user. All products and materials are sold and services provided subject to Mitel's conditions of sale which are available on request.

M Mitel (design) and ST-BUS are registered trademarks of MITEL Corporation
Mitel Semiconductor is an ISO 9001 Registered Company
Copyright 1999 MITEL Corporation
All Rights Reserved
Printed in CANADA

TECHNICAL DOCUMENTATION - NOT FOR RESALE