SP8714

2100MHz Very Low Current Multi-Modulus Divider

DS3562 - 5.1 April 1999

The SP8714 is a switchable divide by 32/33, 64/65 programmable divider which is guaranteed to operate up to 2100MHz. It will operate from a supply of 2.7V to 5.25V and requires typically 6.8mA (including the output current). It also features a power down facility for battery economy.

The RF inputs are internally biased and should be capacitively coupled to the signal source. The output is designed to interface with CMOS synthesisers.

FEATURES

- Operation to 2100MHz
- Very Low Power
- Single Supply Operation 2.7V to 5.25V
- Power Down Facility for Battery Economy
- Latched Modulus Control Input
- Push Pull Output Drive
- ESD Protection on All Pins†

APPLICATIONS

- Cellular Telephones
- Cordless Telephones

† ESD precautions must be observed

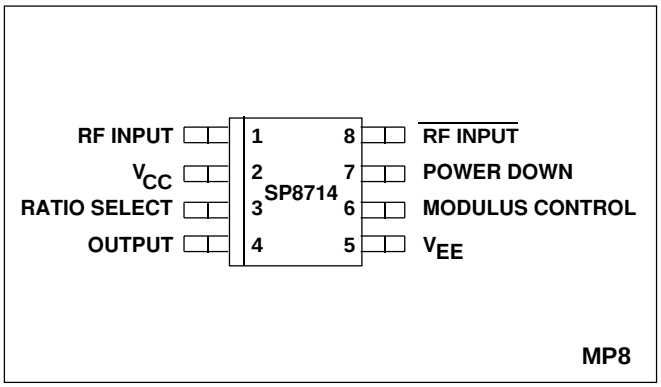

Fig. 1 Pin connections - top view

ORDERING INFORMATION

SP8714 IG MPAS Industrial Temperature Range
Miniature Plastic SOIC Package

SP8714 IG MPAC As above supplied on Tape and Reel

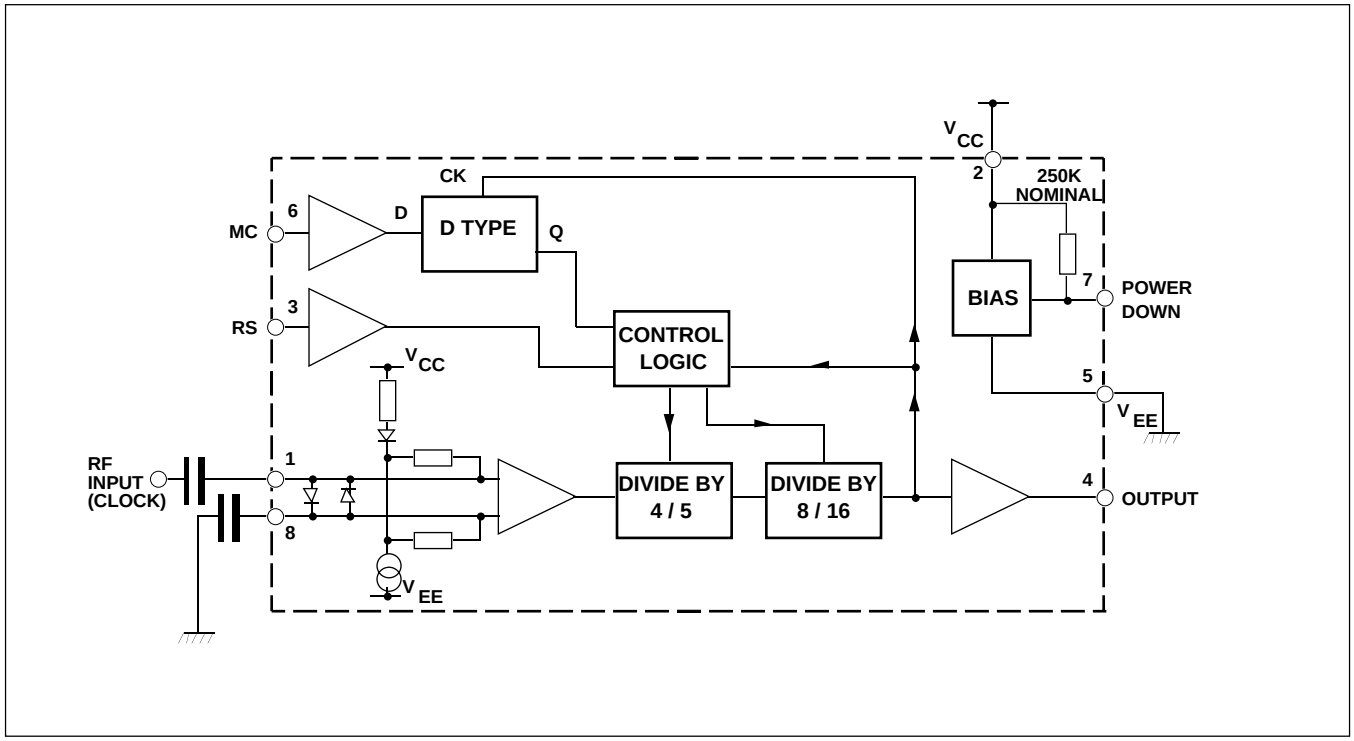

Fig. 2 Block diagram

ABSOLUTE MAXIMUM RATINGS

Supply voltage (V_{EE}=0V)	(note 1)	-0.5V to 7V
Control and RF inputs, RF output (V_{EE} =0V)	(note 1)	-0.5V to V_{CC}+0.5V
RF input current	(note 1)	10mA
Operating temperature		-40°C to +85°C
Storage temperature range		-55°C to +150°C
Maximum junction temperature		+150°C

NOTE 1. Duration <2 minutes.

ELECTRICAL CHARACTERISTICS

Guaranteed over the following conditions (unless otherwise stated):

V_{CC}=+2.7V to +5.25V (with respect to V_{EE}), Output load (pin 4) = 10pF, T_{amb} = -40°C to +85°C (note 2)

Characteristic		Value			Units	Conditions
		Min.	Typ.	Max.		
Supply current	(note 3)		6.8	8.5	mA	Power down input low
Supply current	(note 3)		8	50	µA	Power down input high
Power down high		V_{CC}-0.5		V_{CC}	V	
Power down low		0		V_{CC}-2.0	V	
Modulus control high	(note 4)	0.6V_{CC}		V_{CC}	V	Divide by 32 or 64
Modulus control low	(note 4)	0		0.4V_{CC}	V	Divide by 33 or 65
Ratio select high	(note 4, 9)	0.6V_{CC}		V_{CC}	V	Divide by 32 or 33
Ratio select low	(note 4, 9)	0		0.4V_{CC}	V	Divide by 64 or 65
Max. sinewave input frequency		2100			MHz	See Figure 5
Min. sinewave input frequency				200	MHz	See Figure 5
Min. RF input voltage				50	mV RMS	RF input 200MHz to 2100MHz. See Figure 5
Max. RF input voltage		200			mV RMS	RF input 200MHz to 2100MHz. See Figure 5
Output level (pin 4)		500	600		mV p-p	
Modulus set-up time, t_s	(notes 5,6,8)	10			ns	RF input = 1GHz
Modulus hold time, t_h	(notes 6,8)			1	ns	RF input = 1GHz
Power down time, t_{pd}	(notes 7,8)			10	µs	See Figure 9
Power down recovery time, t_{pu}	(notes 7,8)			8	µs	See Figure 9

NOTES
2. All electrical testing is performed at +85°C.
3. Typical values are measured at +25°C and V_{CC} = +5V.
4. Modulus Control and Ratio Select are high impedance inputs which can be driven directly by standard CMOS outputs.
5. Modulus control is latched at the end of the previous cycle.
6. See Figure 4.
7. See Figure 8.
8. These parameters are not tested but are guaranteed by design.
9. The ratio select pin is not intended to be switched dynamically.

OPERATING NOTES

The RF inputs are biased internally and are normally coupled to the signal source with suitable capaitors.

The output stage has a novel design and is intended to drive a CMOS synthesiser input. External pull-down resistors or circuits are not required. The SP8714 is not suitable for driving TTL or similar devices.

The device will operate down to DC frequencies for non-sinusoidal signals provided that the input slew rate is better than 100V/µs.

POWER DOWN (pin 7) is connected internally to a pull-up resistor. If the battery economy facility is not used, pin 7 should be connected to V_{EE}.

Ratio Select (Pin 3)	Modulus Control (Pin 6)	Division Ratio
L	L	65
L	H	64
H	L	33
H	H	32

Table 1 Truth table

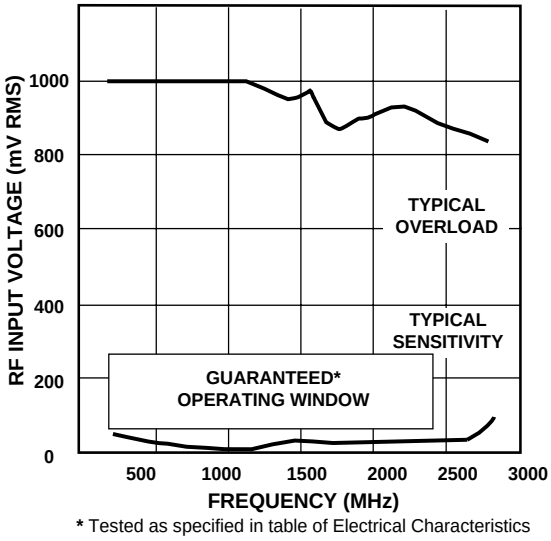

***** Tested as specified in table of Electrical Characteristics

Fig. 3 Typical input characteristics

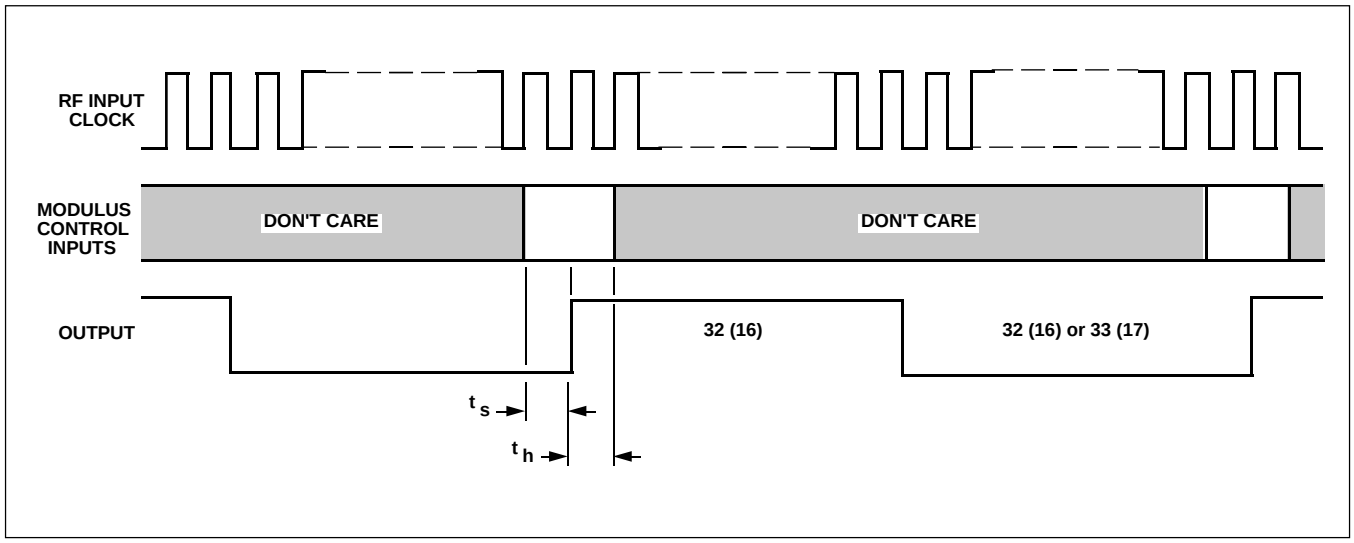

Fig. 4 Modulus control timing diagram

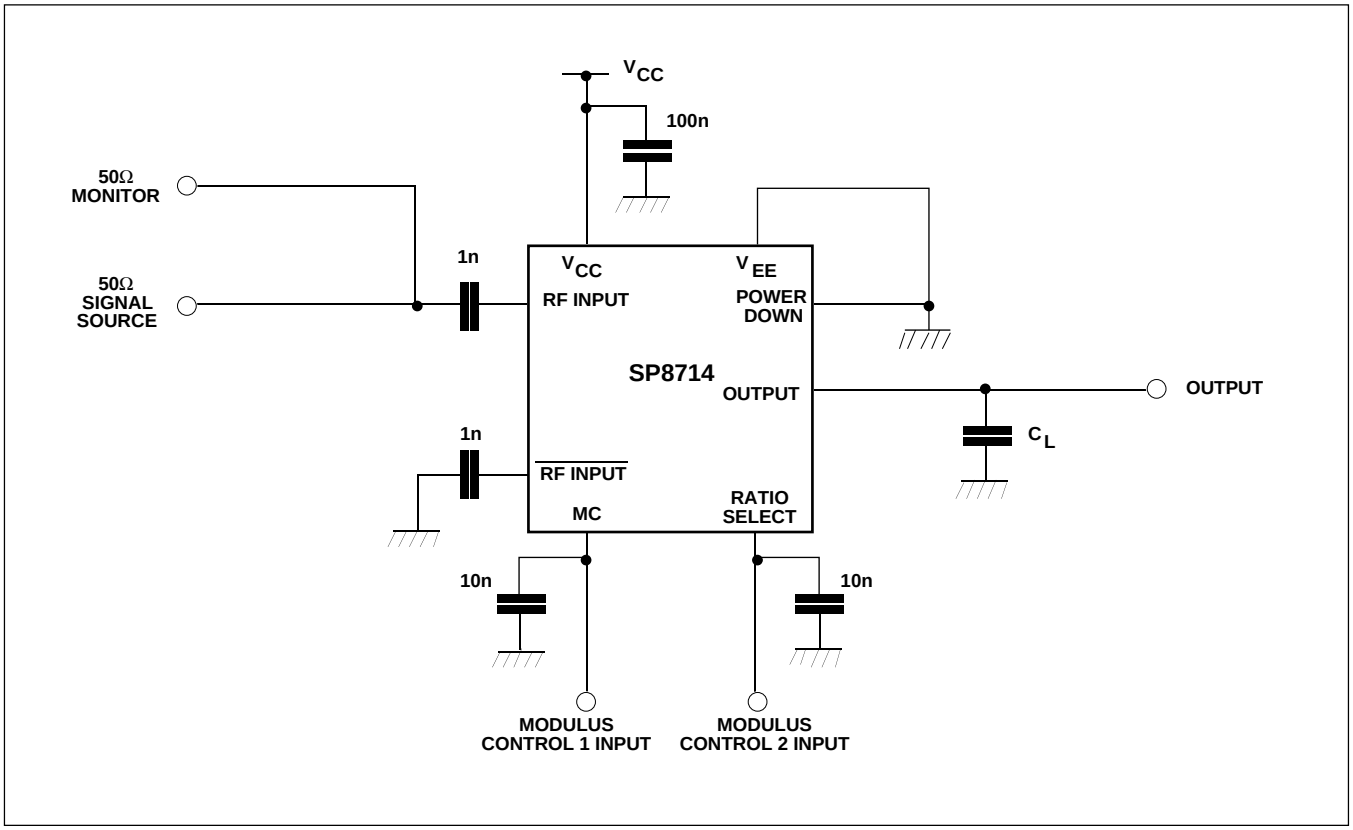

Fig. 5 Toggle frequency test circuit

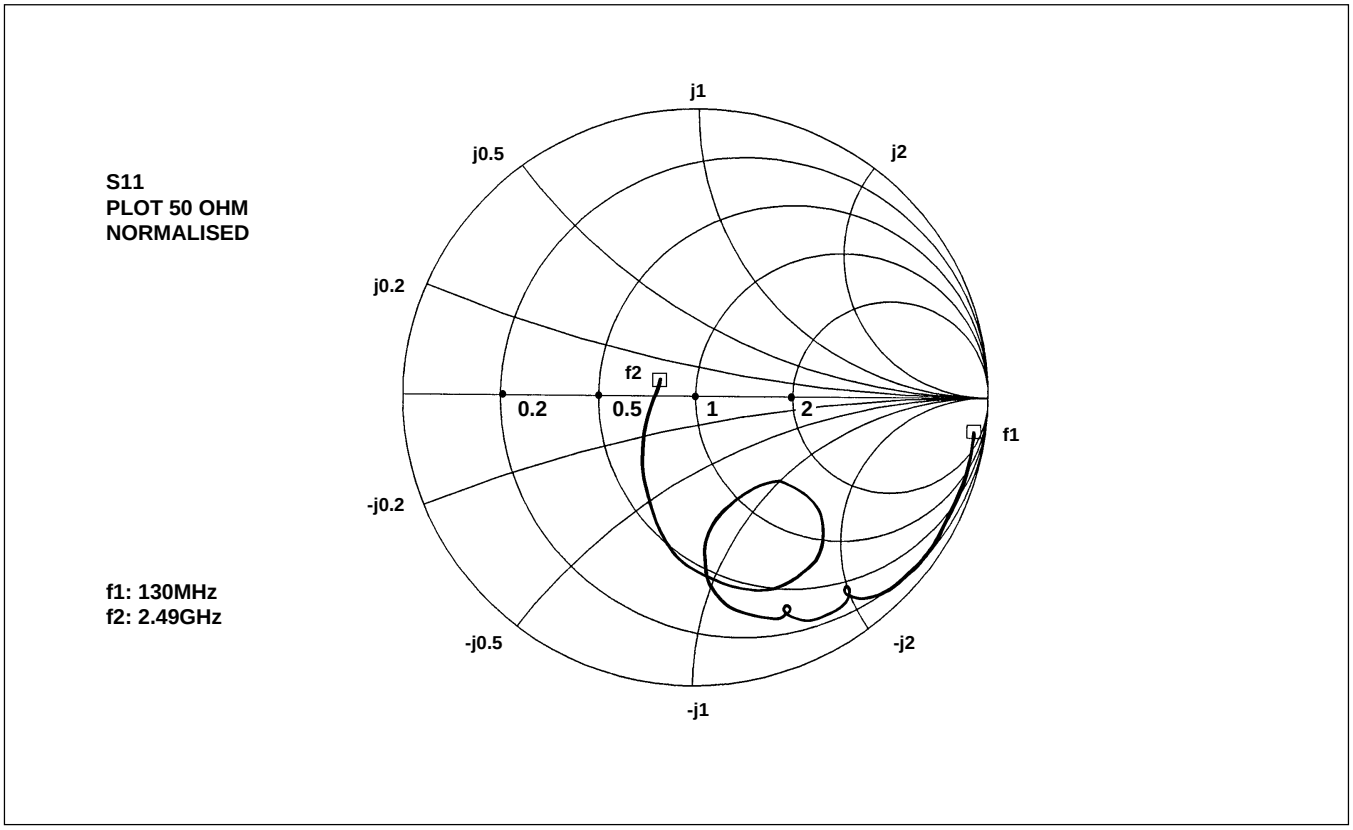

Fig. 6 Typical S11 parameter for pin 1. V_{CC} = +5.0V

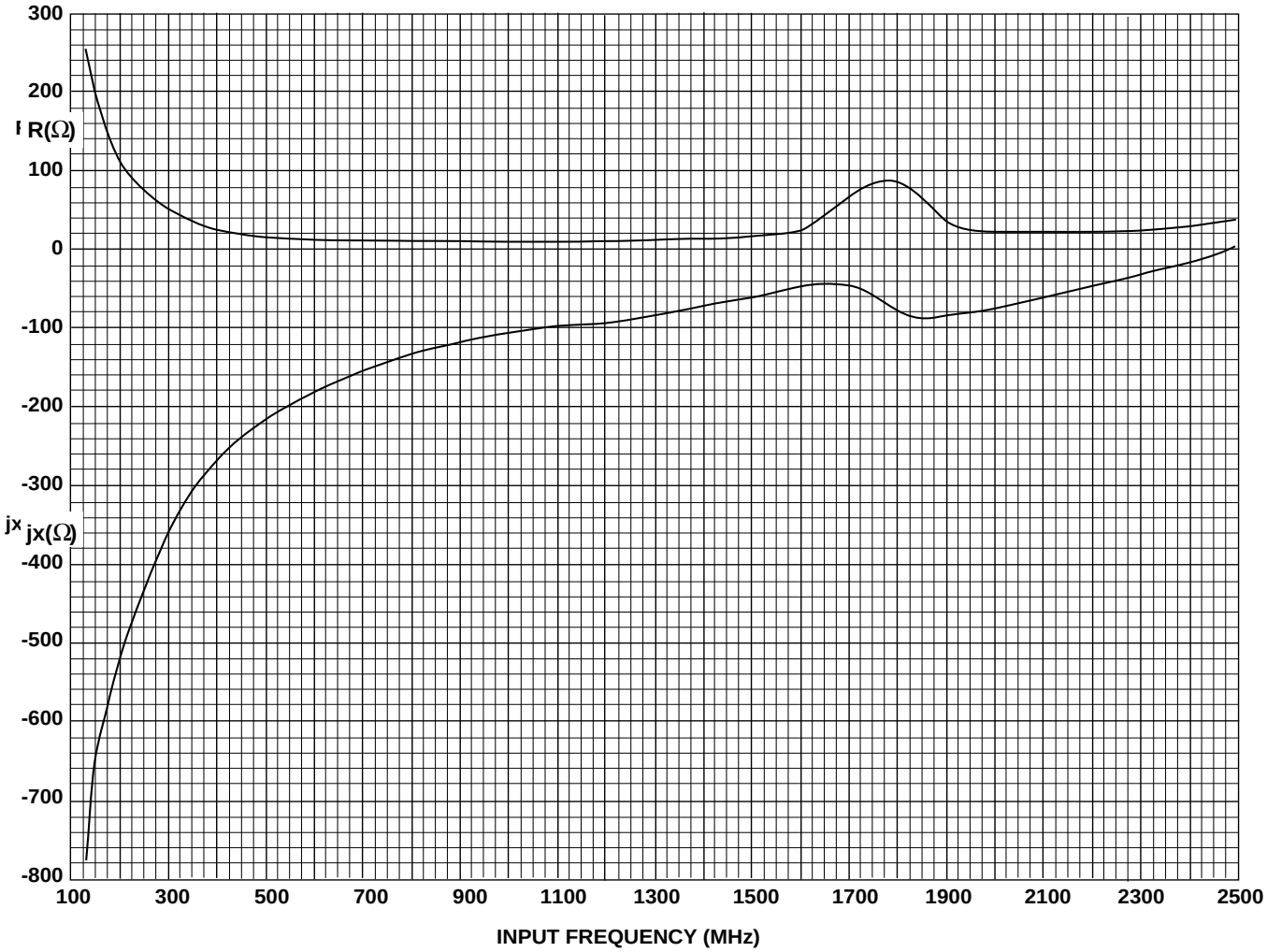

Fig. 7 Typical input impedance v. frequency

FREQ-MHZ	R (Ω)	jx (Ω)
130.000	255.068	-733.538
177.200	153.330	-583.339
224.400	88.649	-482.377
271.600	71.050	-411.502
318.800	39.526	-346.620
366.000	38.779	-304.804
413.200	23.809	-269.674
460.400	27.545	-245.161
507.600	22.227	-224.572
554.800	17.767	-203.241
602.000	14.607	-186.545
649.200	13.075	-174.839
596.400	12.583	-160.468
743.600	10.213	-149.642
790.800	11.269	-143.144
838.000	10.509	-132.750
885.200	10.172	-124.495
332.400	10.841	-118.100
979.600	12.260	-109.552
1026.80	14.508	-103.110
1074.00	19.260	-98.149
1121.20	23.285	-99.907
1168.40	18.956	-99.639
1215.60	14.377	-95.033
1262.80	12.711	-89.249
1310.00	12.598	-82.581
1357.20	14.565	-77.212
1404.40	19.164	-71.976
1451.60	15.001	-70.250
1498.80	15.864	-61.898
1546.00	18.993	-53.403
1593.20	26.822	-44.704
1640.40	39.830	-41.522
1687.60	47.875	-43.255
1734.80	63.267	-44.879
1782.00	74.259	-67.801
1829.20	58.878	-86.964
1876.40	42.530	-87.052
1923.60	32.302	-80.484
1970.80	27.333	-73.570
2018.00	24.894	-67.291
2065.20	23.369	-60.620
2112.40	23.577	-54.716
2159.60	23.023	-49.220
2206.80	23.325	-43.340
2254.00	24.623	-37.163
2301.20	26.340	-30.805
2348.40	28.632	-24.040
2395.60	31.161	-17.165
2442.80	34.219	-8.172
2490.00	39.808	-4.368

Table.2 Coefficients for Fig.7

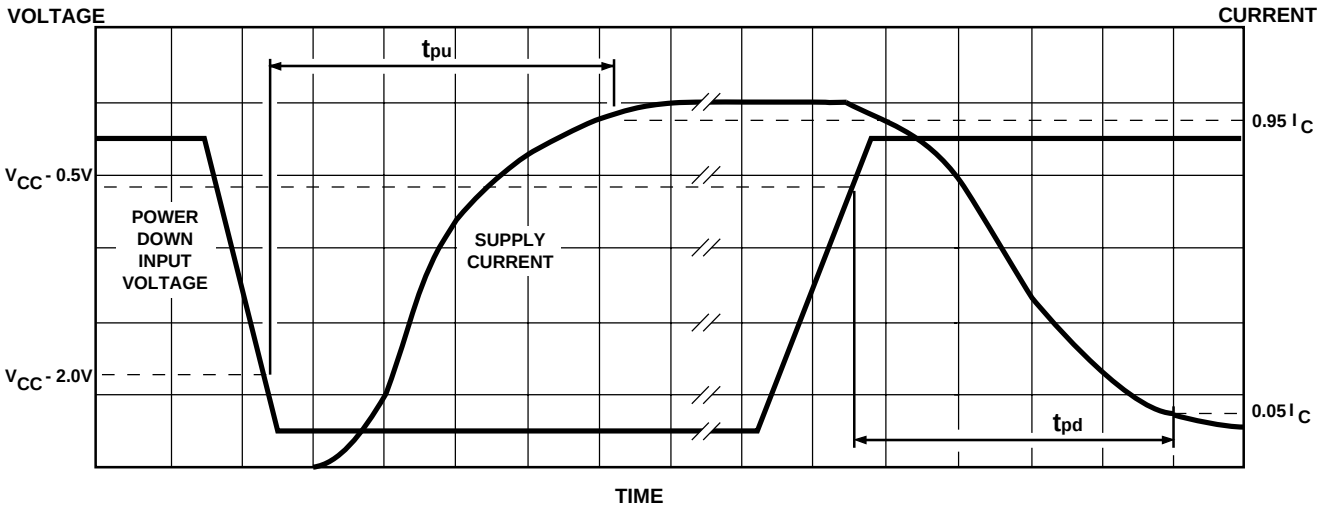

Fig. 8 Power up and power down

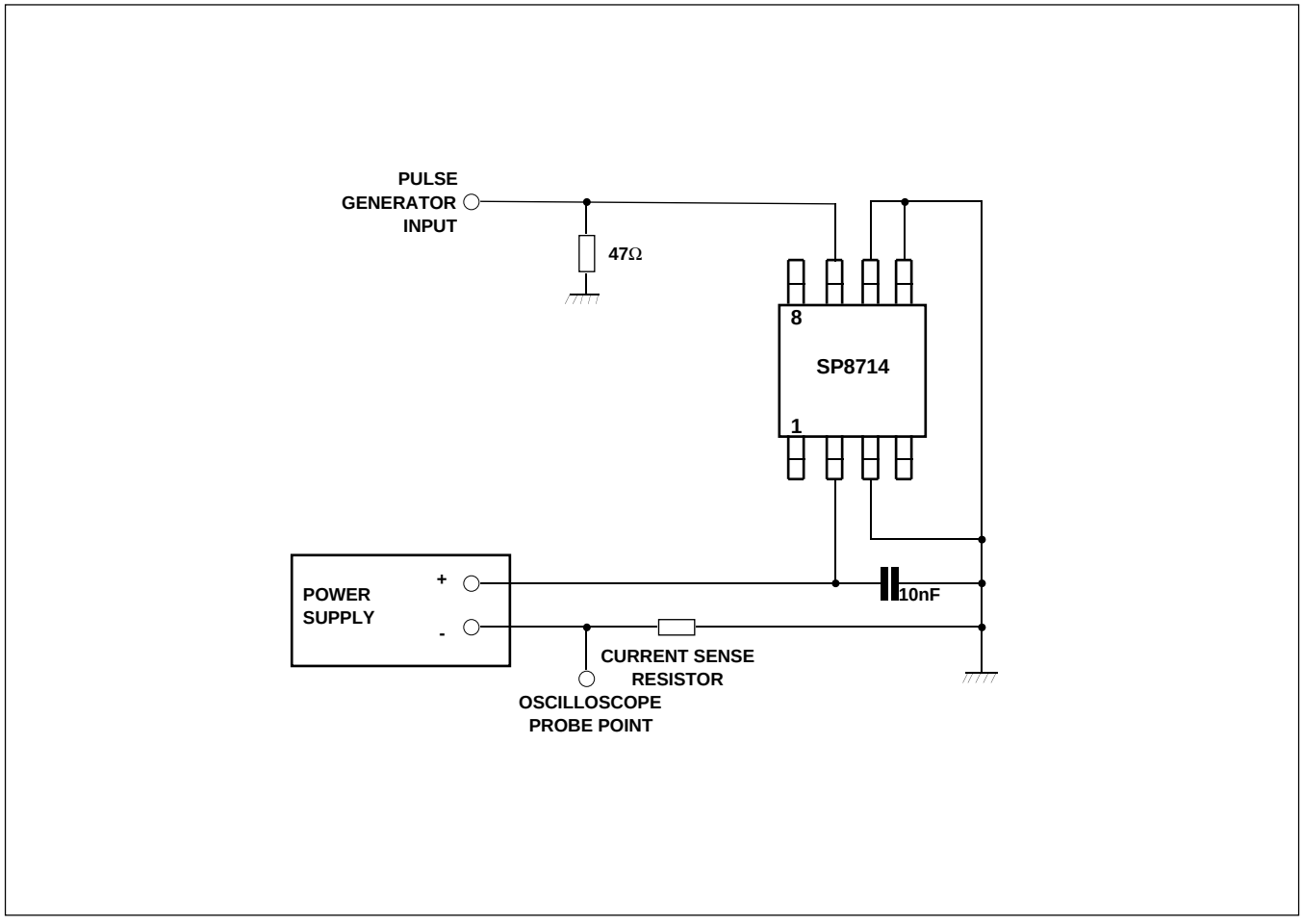

Fig. 9 Power-down time test circuit

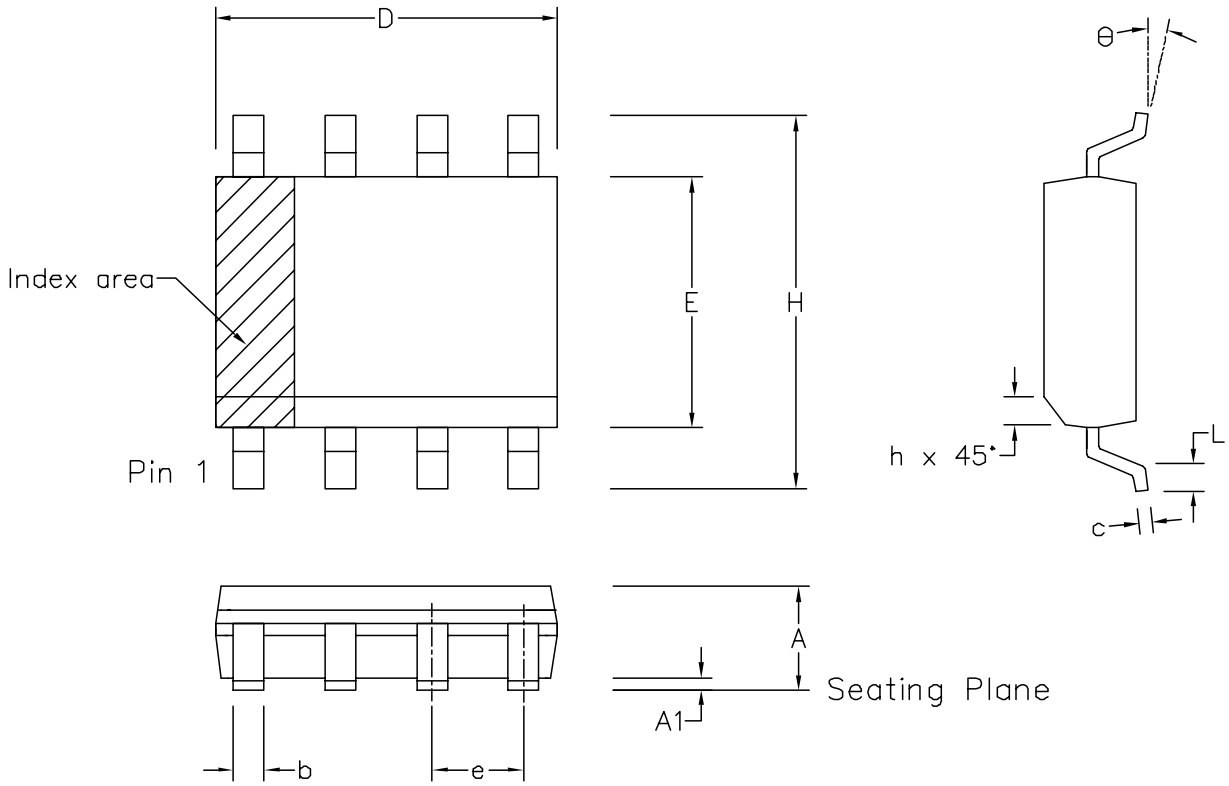

	Min mm	Max mm	Min inch	Max inch
A	1.35	1.75	0.053	0.069
A1	0.10	0.25	0.004	0.010
D	4.80	5.00	0.189	0.197
H	5.80	6.20	0.228	0.244
E	3.80	4.00	0.150	0.157
L	0.40	1.27	0.016	0.050
e	1.27 BSC		0.050 BSC	
b	0.33	0.51	0.013	0.020
c	0.19	0.25	0.008	0.010
Θ	0°	8°	0°	8°
h	0.25	0.50	0.010	0.020
	Pin Features			
N	8		8	
Conforms to JEDEC MS-012AA Iss. C				

Notes:
1. The chamfer on the body is optional. If it not present, a visual index feature, e.g. a dot, must be located within the cross-hatched area.
2. Controlling dimension are in inches.
3. Dimension D do not include mould flash, protusion or gate burrs. These shall not exceed 0.006" per side.
4. Dimension E1 do not include inter-lead flash or protusion. These shall not exceed 0.010" per side.
5. Dimension b does not include dambar protusion/intrusion. Allowable dambar protusion shall be 0.004" total in excess of b dimension.

© Mitel

ORIGINATING SITE: SWINDON

ISSUE	1	2	3	4	
ACN	006745	201936	202595	203705	
DATE	5APR95	27FEB97	12JUN97	9DEC97	
APPROVED					

MITEL SEMICONDUCTOR

Title: Package Outline Drawing for 8 lds SOIC(N)-0.150" Body Width (MP)

Drawing Number
GPD00010

MITEL SEMICONDUCTOR

http://www.mitelsemi.com

World Headquarters - Canada
Tel: +1 (613) 592 2122
Fax: +1 (613) 592 6909

North America
Tel: +1 (770) 486 0194
Fax: +1 (770) 631 8213

Asia/Pacific
Tel: +65 333 6193
Fax: +65 333 6192

Europe, Middle East, and Africa (EMEA)
Tel: +44 (0) 1793 518528
Fax: +44 (0) 1793 518581

Information relating to products and services furnished herein by Mitel Corporation or its subsidiaries (collectively "Mitel") is believed to be reliable. However, Mitel assumes no liability for errors that may appear in this publication, or for liability otherwise arising from the application or use of any such information, product or service or for any infringement of patents or other intellectual property rights owned by third parties which may result from such application or use. Neither the supply of such information or purchase of product or service conveys any license, either express or implied, under patents or other intellectual property rights owned by Mitel or licensed from third parties by Mitel, whatsoever. Purchasers of products are also hereby notified that the use of product in certain ways or in combination with Mitel, or non-Mitel furnished goods or services may infringe patents or other intellectual property rights owned by Mitel.

This publication is issued to provide information only and (unless agreed by Mitel in writing) may not be used, applied or reproduced for any purpose nor form part of any order or contract nor to be regarded as a representation relating to the products or services concerned. The products, their specifications, services and other information appearing in this publication are subject to change by Mitel without notice. No warranty or guarantee express or implied is made regarding the capability, performance or suitability of any product or service. Information concerning possible methods of use is provided as a guide only and does not constitute any guarantee that such methods of use will be satisfactory in a specific piece of equipment. It is the user's responsibility to fully determine the performance and suitability of any equipment using such information and to ensure that any publication or data used is up to date and has not been superseded. Manufacturing does not necessarily include testing of all functions or parameters. These products are not suitable for use in any medical products whose failure to perform may result in significant injury or death to the user. All products and materials are sold and services provided subject to Mitel's conditions of sale which are available on request.

M Mitel (design) and ST-BUS are registered trademarks of MITEL Corporation
Mitel Semiconductor is an ISO 9001 Registered Company
Copyright 1999 MITEL Corporation
All Rights Reserved
Printed in CANADA

TECHNICAL DOCUMENTATION - NOT FOR RESALE

WWW.ALLDATASHEET.COM

Copyright © Each Manufacturing Company.

All Datasheets cannot be modified without permission.

This datasheet has been download from :

www.AllDataSheet.com

100% Free DataSheet Search Site.

Free Download.

No Register.

Fast Search System.

www.AllDataSheet.com