AUK Semiconductor

# SRA2210U

PNP Silicon Transistor

## Descriptions

- Switching application
- Interface circuit and driver circuit application

## Features

- With built-in bias resistors
- Simplify circuit design
- Reduce a quantity of parts and manufacturing process
- High packing density

## Ordering Information

| Type NO. | Marking | Package Code |
|---|---|---|
| SRA2210U | AR | SOT-323 |

## Outline Dimensions

unit : mm

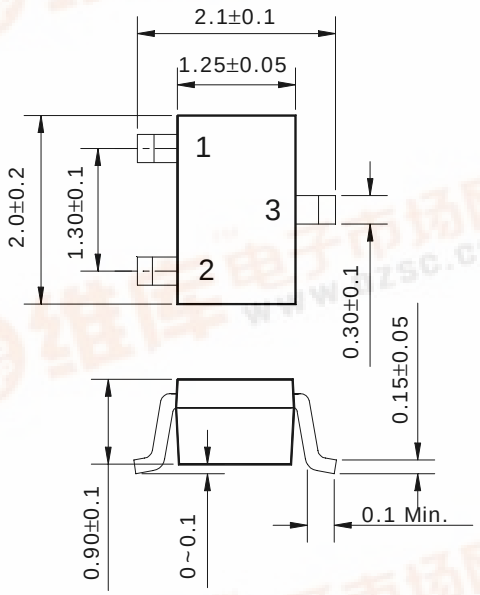


- Equivalent Circuit

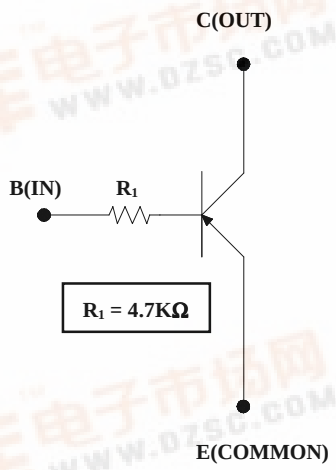

## Absolute maximum ratings

(Ta=25°C)

| Characteristic | Symbol | Ratings | Unit |
|---|---|---|---|
| Collector-Base Voltage | $V_{CBO}$ | -50 | V |
| Collector-Emitter Voltage | $V_{CEO}$ | -50 | V |
| Emitter-Base Voltage | $V_{EBO}$ | -5 | V |
| Collector Current | $I_C$ | -100 | mA |
| Power Dissipation | $P_D$ | 200 | mW |
| Junction Temperature | $T_J$ | 150 | °C |
| Storage Temperature | $T_{STG}$ | -55 ~ 150 | °C |

## Electrical Characteristics

(Ta=25°C)

| Characteristic | Symbol | Test Condition | Min. | Typ. | Max. | Unit |
|---|---|---|---|---|---|---|
| Collector Cut-off Current | $I_{CBO}$ | $V_{CB}$=-50V, $I_E$=0 | - | - | -500 | nA |
| Emitter Cut-off Current | $I_{EBO}$ | $V_{EB}$=-5V, $I_C$=0 | - | - | -500 | nA |
| DC Current Gain | $h_{FE}$ | $V_{CE}$=-5V, $I_C$=-1mA | 120 | - | - | - |
| Collector-Emitter Saturation Voltage | $V_{CE(SAT)}$ | $I_C$=-10mA, $I_B$=-0.5mA | - | -0.1 | -0.3 | V |
| Transition Frequency | $f_T$* | $V_{CE}$=-10V, $I_C$=-5mA | - | 250 | - | MHz |
| Input Resistance | $R_1$ | - | - | 4.7 | - | KΩ |

* : Characteristic of Transistor Only

## Electrical Characteristic Curves

**Fig. 1 $h_{FE}$ - $I_C$**

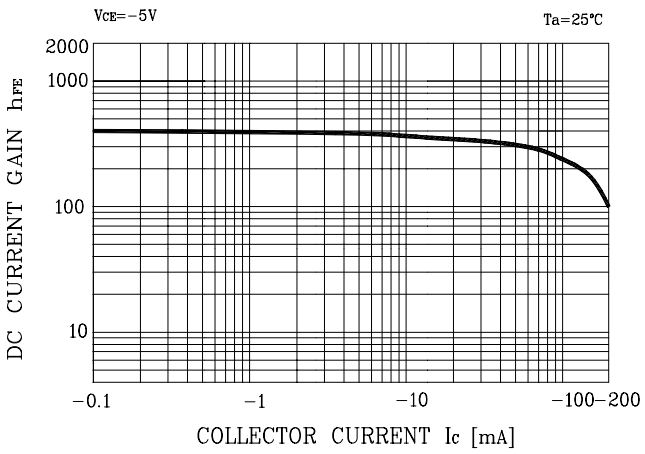


**Fig. 2 $V_{CE(SAT)}$ - $I_C$**