查询SRC1205S供应商 捷多邦，专业PCB打样工厂，24小时加急出货

AUK Semiconductor

SRC1205S

NPN Silicon Transistor

Descriptions

- Switching application
- Interface circuit and driver circuit application

Features

- With built-in bias resistors
- Simplify circuit design
- Reduce a quantity of parts and manufacturing process
- High packing density

Ordering Information

Type NO.	Marking	Package Code
SRC1205S	RC5	SOT-23

Outline Dimensions

unit : mm

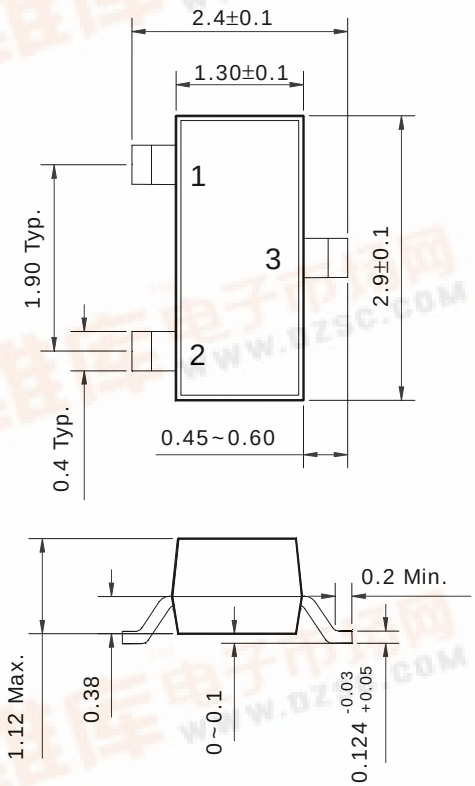

- Equivalent Circuit

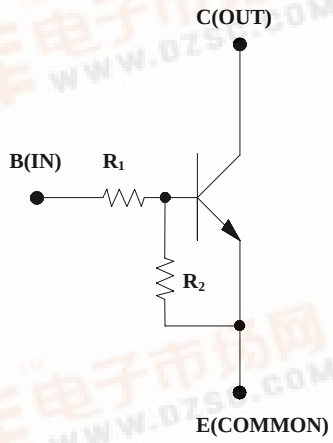

R_1	R_2
2.2KΩ	47KΩ

PIN Connections

1. Base
2. Emitter
3. Collector

找PDF 维库一下 pdf.dzsc.com

Absolute maximum ratings

(Ta=25°C)

Characteristic	Symbol	Ratings	Unit
Out Voltage	V_O	50	V
Input Voltage	V_I	12	V
Out Current	I_O	100	mA
Power Dissipation	P_D	200	mW
Junction Temperature	T_J	150	°C
Storage Temperature	T_{STG}	-55 ~ 150	°C

Electrical Characteristics

(Ta=25°C)

Characteristic	Symbol	Test Condition	Min.	Typ.	Max.	Unit
Output Cut-off Current	$I_{O(OFF)}$	V_O=50V, V_I=0	-	-	500	nA
DC Current Gain	G_I	V_O=5V, I_O=10mA	80	200	-	-
Output Voltage	$V_{O(ON)}$	I_O=10mA, I_I=0.5mA	-	0.1	0.3	V
Input Voltage (ON)	$V_{I(ON)}$	V_O=0.2V, I_O=5mA	-	-	1.1	V
Input Voltage (OFF)	$V_{I(OFF)}$	V_O=5V, I_O=0.1mA	0.5	-	-	V
Transition Frequency	f_T*	V_O=10V, I_O=5mA	-	200	-	MHz
Input Current	I_I	V_I=5V	-	-	3.6	mA

* : Characteristic of Transistor Only

Electrical Characteristic Curves

Fig. 1 I_O - $V_{I(ON)}$

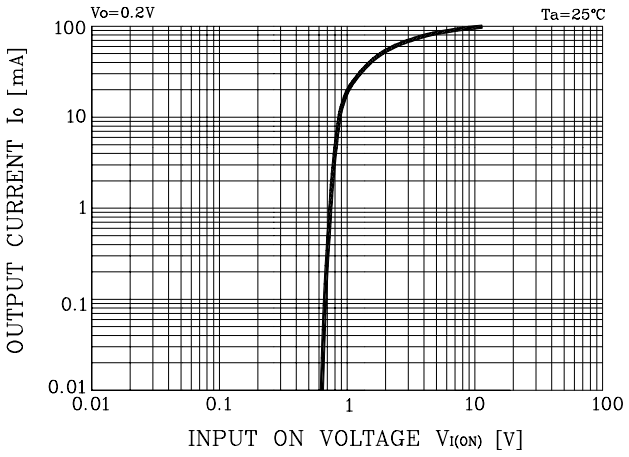

Fig. 2 I_O - $V_{I(OFF)}$

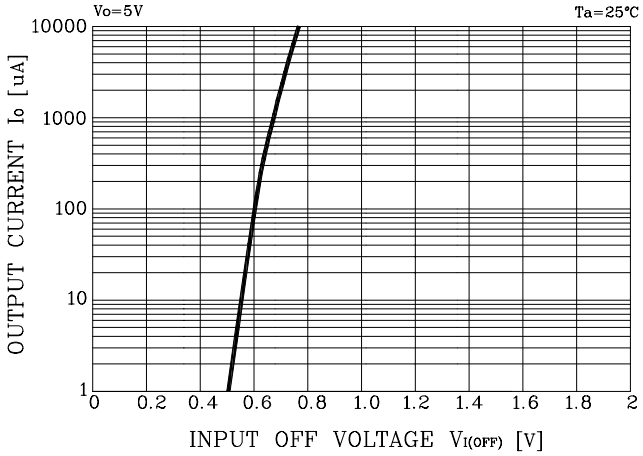
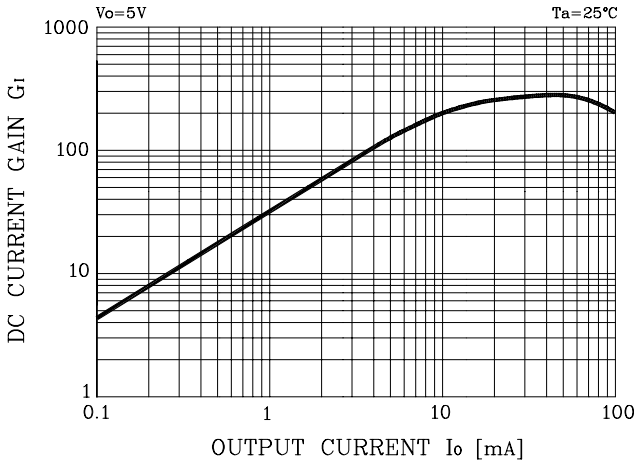
Fig. 3 G_I - I_O