ST83003

HIGH VOLTAGE FAST-SWITCHING NPN POWER TRANSISTOR

- MEDIUM VOLTAGE CAPABILITY
- LOW SPREAD OF DYNAMIC PARAMETERS
- MINIMUM LOT-TO-LOT SPREAD FOR RELIABLE OPERATION
- VERY HIGH SWITCHING SPEED

APPLICATIONS:

- ELECTRONIC BALLASTS FOR FLUORESCENT LIGHTING
- SWITCH MODE POWER SUPPLIES

DESCRIPTION

The device is manufactured using high voltage Multi Epitaxial Planar technology for high switching speeds and medium voltage capability.

It uses a Cellular Emitter structure with planar edge termination to enhance switching speeds while maintaining the wide RBSOA.

The ST83003 is expressly designed for a new solution to be used in compact fluorescent lamps, where it is coupled with the ST93003, its complementary PNP transistor.

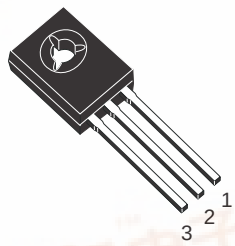

SOT-32

INTERNAL SCHEMATIC DIAGRAM

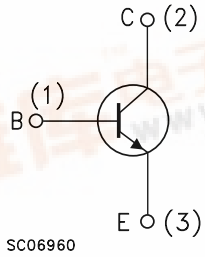

ABSOLUTE MAXIMUM RATINGS

Symbol	Parameter	Value	Unit
V_{CES}	Collector-Emitter Voltage (V_{BE} = 0)	700	V
V_{CEO}	Collector-Emitter Voltage (I_B = 0)	400	V
V_{EBO}	Emitter-Base Voltage (I_C = 0, I_B = 0.75 A, t_p < 10µs, T_j < 150°C)	$V_{(BR)EBO}$	V
I_C	Collector Current	1.5	A
I_{CM}	Collector Peak Current (t_p < 5 ms)	3	A
I_B	Base Current	0.75	A
I_{BM}	Base Peak Current (t_p < 5 ms)	1.5	A
P_{tot}	Total Dissipation at T_c = 25 °C	40	W
T_{stg}	Storage Temperature	-65 to 150	°C
T_j	Max. Operating Junction Temperature	150	°C

THERMAL DATA

$R_{thj-case}$	Thermal Resistance Junction-case	Max	3.12	$^oC/W$
$R_{thj-amb}$	Thermal Resistance Junction-ambient	Max	89	$^oC/W$

ELECTRICAL CHARACTERISTICS (T_{case} = 25 ^oC unless otherwise specified)

Symbol	Parameter	Test Conditions		Min.	Typ.	Max.	Unit
I_{CEV}	Collector Cut-off Current (V_{BE} = -1.5V)	V_{CE} = 700V V_{CE} = 700V	 T_j = 125^oC			1 5	mA mA
$V_{(BR)EBO}$	Emitter-Base Breakdown Voltage (I_C = 0)	I_E = 10 mA		12		18	V
$V_{CEO(sus)}$*	Collector-Emitter Sustaining Voltage (I_B = 0)	I_C = 10 mA L = 25 mH		400			V
$V_{CE(sat)}$*	Collector-Emitter Saturation Voltage	I_C = 0.5 A I_C = 0.35 A	I_B = 0.1 A I_B = 50 mA			0.5 1	V V
$V_{BE(sat)}$*	Base-Emitter Saturation Voltage	I_C = 0.5 A	I_B = 0.1 A			1	V
h_{FE}*	DC Current Gain	I_C = 10 mA I_C = 0.35 A I_C = 1 A	V_{CE} = 5 V V_{CE} = 5 V V_{CE} = 5 V	10 16 4	25	32	
 t_r t_s t_f	RESISTIVE LOAD Rise Time Storage Time Fall Time	 I_C = 0.35 A I_{B1} = 70 mA $T_p \geq$ 25 µs	 V_{CC} = 125 V I_{B2} = -70 mA (see figure 2)	 1.5	 100 2.2 0.2	 2.9	 ns µs µs
 t_s t_f	INDUCTIVE LOAD Storage Time Fall Time	I_C = 0.5 A $V_{BE(off)}$ = -5 V V_{clamp} = 300 V	I_{B1} = 0.1 A L = 10 mH (see figure 1)		 450 90		 ns ns

∗ Pulsed: Pulse duration = 300µs, duty cycle = 1.5 %

Safe Operating Areas

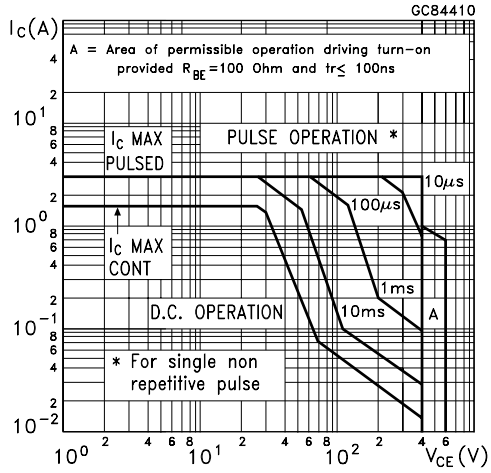

Derating Curve

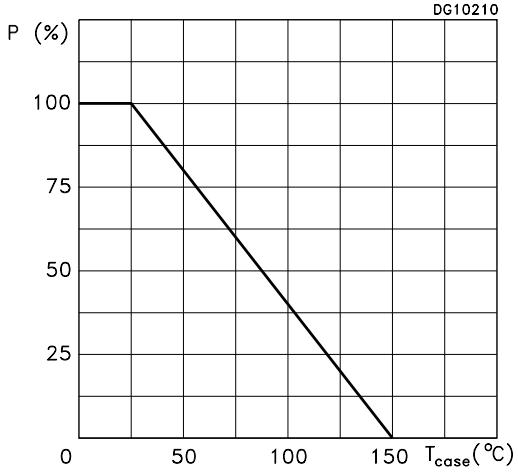

DC Current Gain

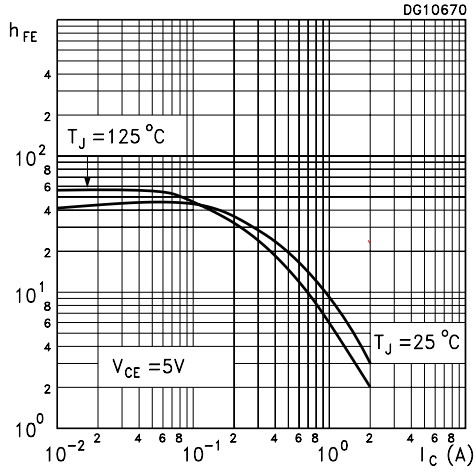

DC Current Gain

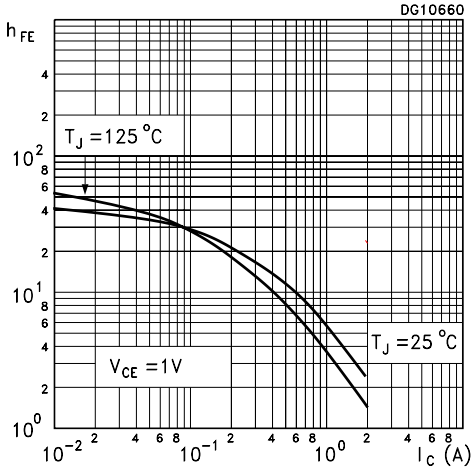

Collector Emitter Saturation Voltage

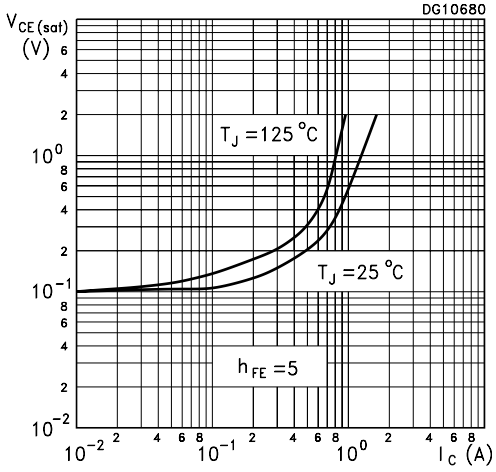

Base Emitter Saturation Voltage

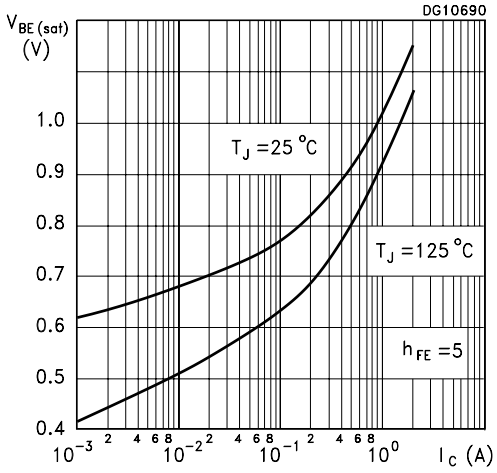

Resistive Load Fall Time

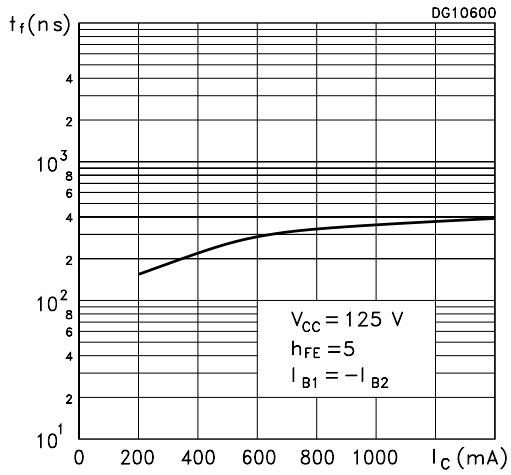

Resistive Load Storage Time

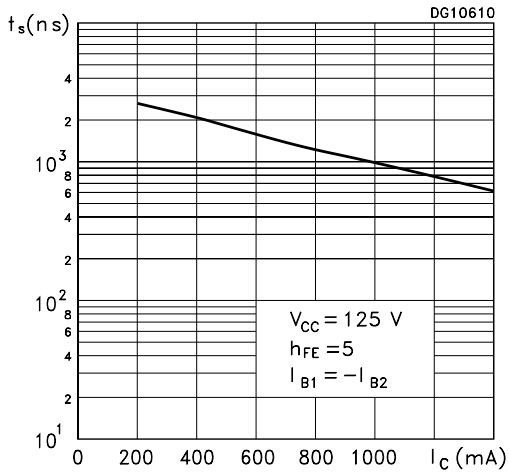

Inductive Load Fall Time

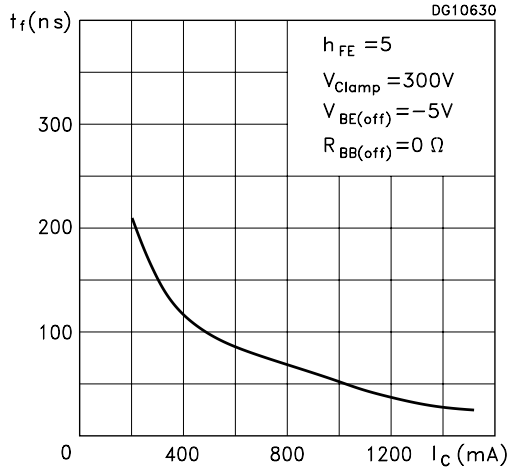

Inductive Load Storage Time

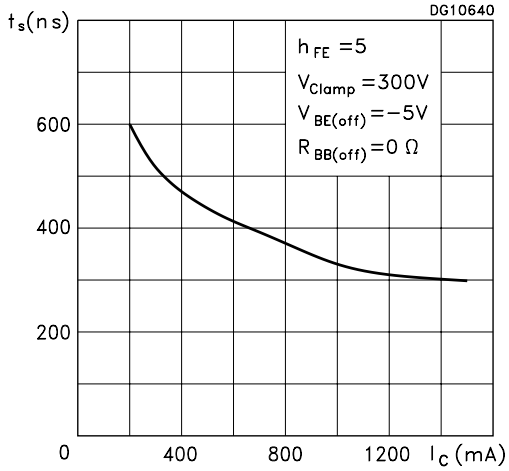

Reverse Biased SOA

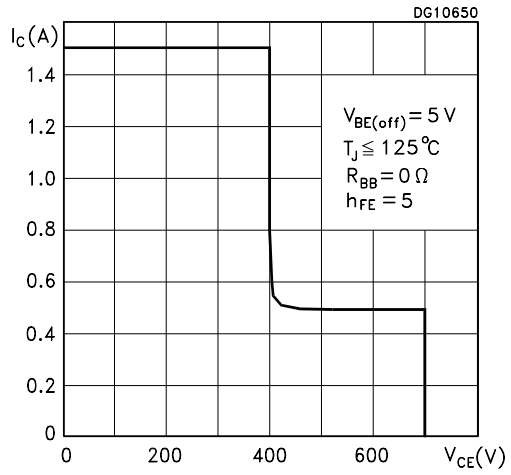

Figure 1: Inductive Load Switching Test Circuit.

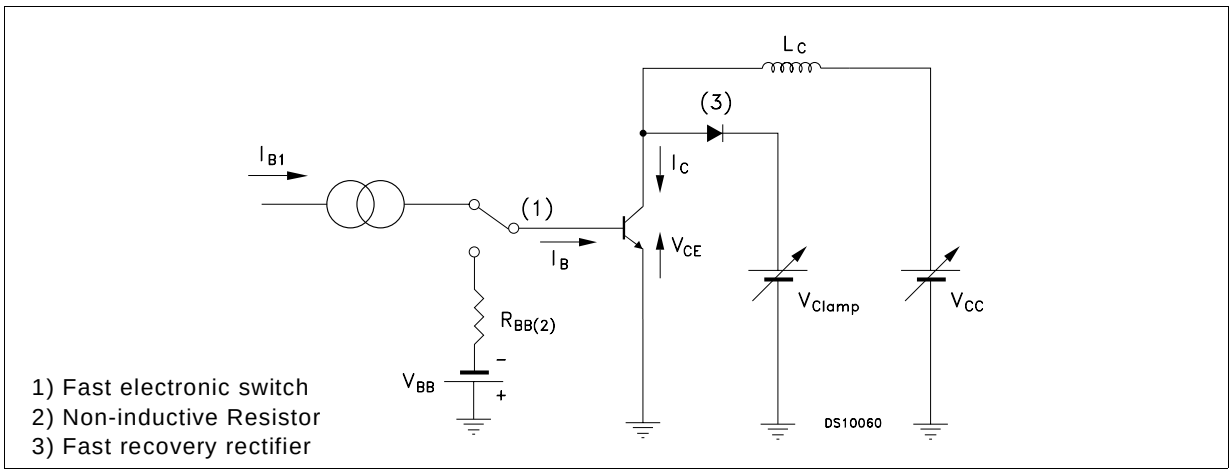

Figure 2: Resistive Load Switching Test Circuit.

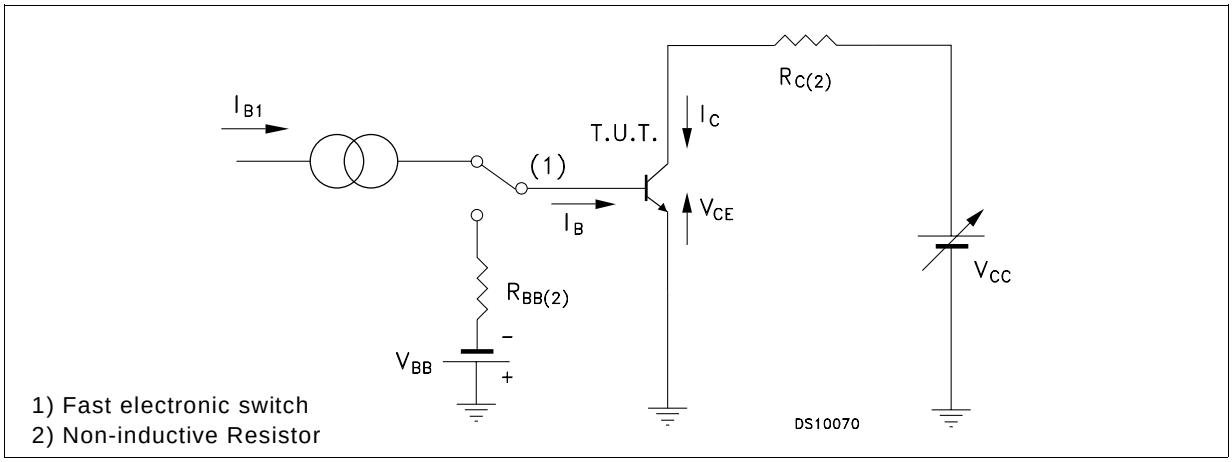

SOT-32 (TO-126) MECHANICAL DATA

DIM.	mm			inch		
	MIN.	TYP.	MAX.	MIN.	TYP.	MAX.
A	7.4		7.8	0.291		0.307
B	10.5		10.8	0.413		0.425
b	0.7		0.9	0.028		0.035
b1	0.40		0.65	0.015		0.025
C	2.4		2.7	0.094		0.106
c1	1.0		1.3	0.039		0.051
D	15.4		16.0	0.606		0.630
e		2.2			0.087	
e3		4.4			0.173	
F		3.8			0.150	
G	3		3.2	0.118		0.126
H			2.54			0.100
H2		2.15			0.084	
I		1.27			0.05	
O		0.3			0.011	
V		10°			10°	

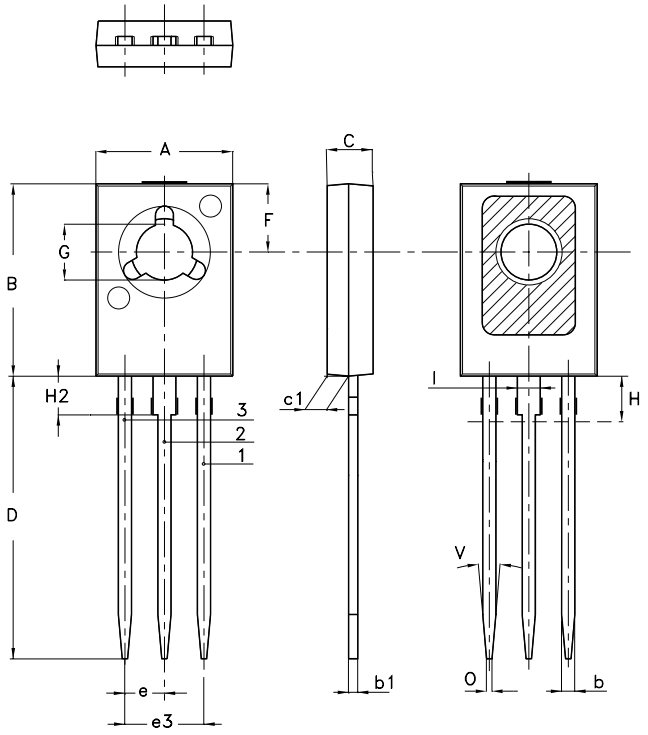

1: Base
2: Collector
3: Emitter

0016114/B