查询STD17NF03供应商 捷多邦，专业PCB打样工厂，24小时加急出货

STD17NF03L

N-CHANNEL 30V - 0.038Ω - 17A - DPAK/IPAK STripFET™ POWER MOSFET

TYPE	V_{DSS}	$R_{DS(on)}$	I_D
STD17NF03L	30V	<0.05Ω	17A

- TYPICAL R_{DS}(on) = 0.038Ω
- EXCEPTIONAL dv/dt CAPABILITY
- APPLICATION ORIENTED CHARACTERIZATION
- ADD SUFFIX "T4" FOR ORDERING IN TAPE & REEL
- ADD SUFFIX "-1" FOR ORDERING IN IPAK VERSION

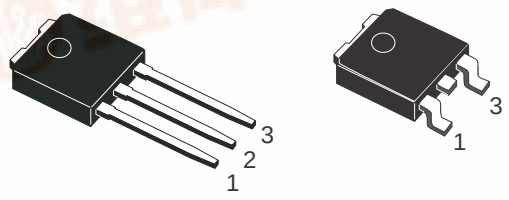

IPAK DPAK

DESCRIPTION

This Power Mosfet is the latest development of STMicroelectronics unique "Single Feature Size™" strip-based process. The resulting transistor shows extremely high packing density for low on-resistance, rugged avalance characteristics and less critical alignment steps therefore a remarkable manufacturing reproducibility.

INTERNAL SCHEMATIC DIAGRAM

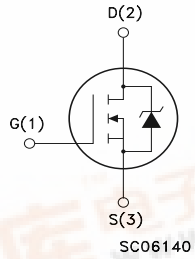

APPLICATIONS

- DC-DC & DC-AC CONVERTERS
- MOTOR CONTROL, AUDIO AMPLIFIERS
- SOLENOID AND RELAY DRIVERS
- AUTOMOTIVE ENVIRONMENT

ABSOLUTE MAXIMUM RATINGS

Symbol	Parameter	Value	Unit
V_{DS}	Drain-source Voltage (V_{GS} = 0)	30	V
V_{DGR}	Drain-gate Voltage (R_{GS} = 20 kΩ)	30	V
V_{GS}	Gate- source Voltage	±20	V
I_D	Drain Current (continuos) at T_C = 25°C	17	A
I_D	Drain Current (continuos) at T_C = 100°C	12	A
I_{DM} (●)	Drain Current (pulsed)	68	A
P_{TOT}	Total Dissipation at T_C = 25°C	20	W
	Derating Factor	0.13	W/°C
dv/dt (1)	Peak Diode Recovery voltage slope	6	V/ns
E_{AS} (2)	Single Pulse Avalanche Energy	200	mJ
T_{stg}	Storage Temperature	–65 to 175	°C
T_j	Max. Operating Junction Temperature	175	°C

(●) Pulse width limited by safe operating area

(1) I_{SD} ≤17A, di/dt ≤300A/µs, V_{DD} ≤ $V_{(BR)DSS}$, T_j ≤ T_{JMAX}.
(2) Starting T_j=25°C, I_D=11A, V_{DD}=15V

找PDF 维库一下 pdf.dzsc.com

THERMAL DATA

Rthj-case	Thermal Resistance Junction-case Max	7.5	°C/W
Rthj-amb	Thermal Resistance Junction-ambient Max	62.5	°C/W
T_l	Maximum Lead Temperature For Soldering Purpose	275	°C

ELECTRICAL CHARACTERISTICS (TCASE = 25 °C UNLESS OTHERWISE SPECIFIED)

OFF

Symbol	Parameter	Test Conditions	Min.	Typ.	Max.	Unit
$V_{(BR)DSS}$	Drain-source Breakdown Voltage	I_D = 250 µA, V_{GS} = 0	30			V
I_{DSS}	Zero Gate Voltage Drain Current (V_{GS} = 0)	V_{DS} = Max Rating V_{DS} = Max Rating, T_C = 125 °C			1 10	µA µA
I_{GSS}	Gate-body Leakage Current (V_{DS} = 0)	V_{GS} = ±20V			±100	nA

ON (1)

Symbol	Parameter	Test Conditions	Min.	Typ.	Max.	Unit
$V_{GS(th)}$	Gate Threshold Voltage	V_{DS} = V_{GS}, I_D = 250µA	1			V
$R_{DS(on)}$	Static Drain-source On Resistance	V_{GS} = 10V, I_D = 8.5 A V_{GS} = 5 V, I_D = 8.5 A		0.038 0.045	0.05 0.06	Ω
$I_{D(on)}$	On State Drain Current	V_{DS} > $I_{D(on)}$ x $R_{DS(on)max}$, V_{GS} = 10V	17			A

DYNAMIC

Symbol	Parameter	Test Conditions	Min.	Typ.	Max.	Unit
g_{fs} (1)	Forward Transconductance	V_{DS} > $I_{D(on)}$ x $R_{DS(on)max}$, I_D =11A		7		S
C_{iss}	Input Capacitance	V_{DS} = 25V, f = 1 MHz, V_{GS} = 0		330		pF
C_{oss}	Output Capacitance			90		pF
C_{rss}	Reverse Transfer Capacitance			40		pF

ELECTRICAL CHARACTERISTICS (CONTINUED)

SWITCHING ON

Symbol	Parameter	Test Conditions	Min.	Typ.	Max.	Unit
$t_{d(on)}$	Turn-on Delay Time	V_{DD} = 15V, I_D = 8.5A R_G = 4.7Ω V_{GS} = 4.5V (see test circuit, Figure 3)		11		ns
t_r	Rise Time			100		ns
Q_g	Total Gate Charge	V_{DD} = 24V, I_D = 17A, V_{GS} = 10V		6.5	9	nC
Q_{gs}	Gate-Source Charge			3.6		nC
Q_{gd}	Gate-Drain Charge			2		nC

SWITCHING OFF

Symbol	Parameter	Test Conditions	Min.	Typ.	Max.	Unit
$t_{d(off)}$	Turn-off-Delay Time	V_{DD} = 15V, I_D = 8.5A, R_G = 4.7Ω, V_{GS} = 4.5V (see test circuit, Figure 3)		25		ns
t_f	Fall Time			22		ns
$t_{r(off)}$	Off-voltage Rise Time	Vclamp =24V, I_D =17A R_G = 4.7Ω, V_{GS} = 4.5V		22		ns
t_f	Fall Time	(see test circuit, Figure 5)		55		ns
t_c	Cross-over Time			75		ns

SOURCE DRAIN DIODE

Symbol	Parameter	Test Conditions	Min.	Typ.	Max.	Unit
I_{SD}	Source-drain Current				17	A
I_{SDM} (1)	Source-drain Current (pulsed)				68	A
V_{SD} (2)	Forward On Voltage	I_{SD} = 17A, V_{GS} = 0			1.5	V
t_{rr}	Reverse Recovery Time	I_{SD} = 17A, di/dt = 100A/µs, V_{DD} = 15V, T_j = 150°C (see test circuit, Figure 5)		30		ns
Q_{rr}	Reverse Recovery Charge			18		nC
I_{RRM}	Reverse Recovery Current			1.2		A

Note: 1. Pulsed: Pulse duration = 300 µs, duty cycle 1.5 %.
2. Pulse width limited by safe operating area.

Safe Operating Area

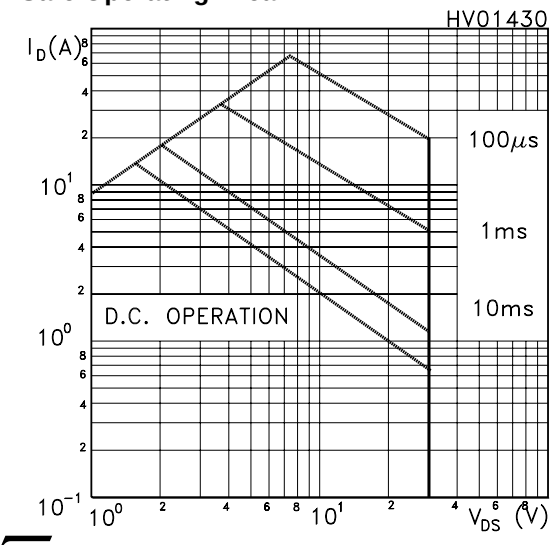

Thermal Impedence

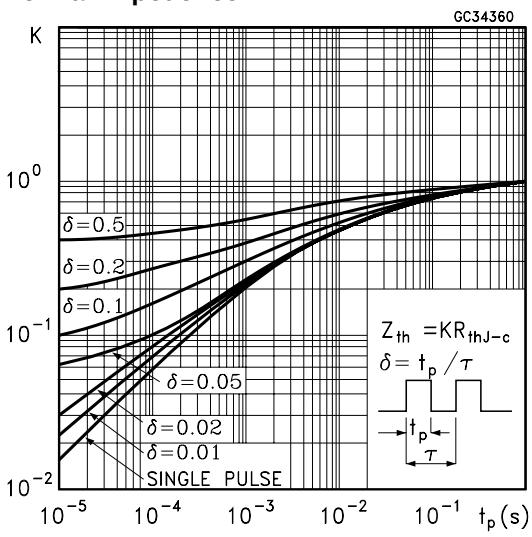

Output Characteristics

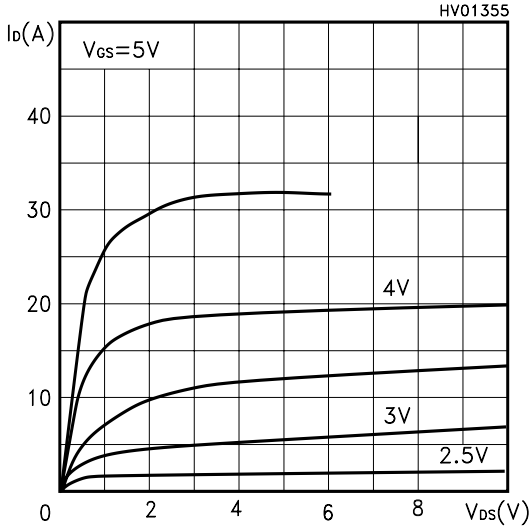

Transfer Characteristics

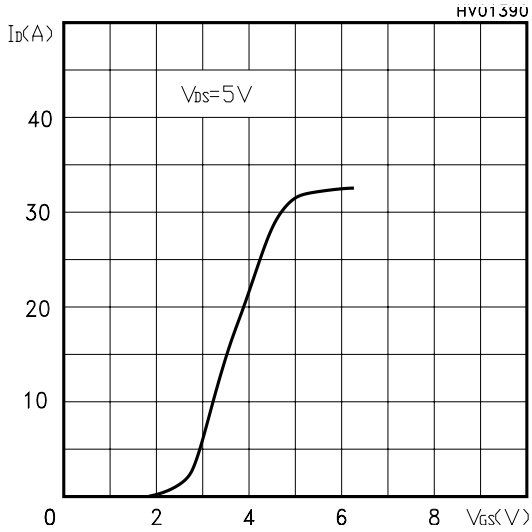

Transconductance

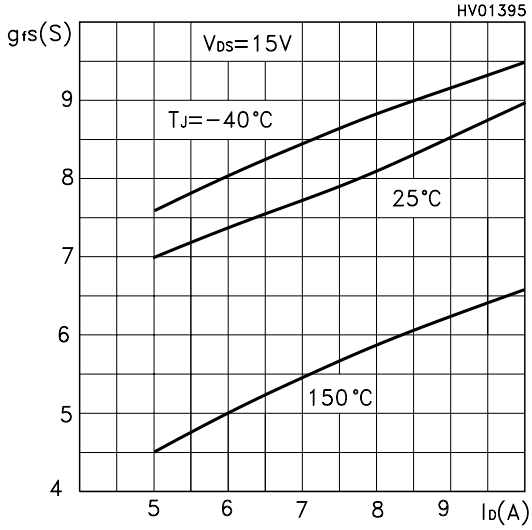

Static Drain-source On Resistance

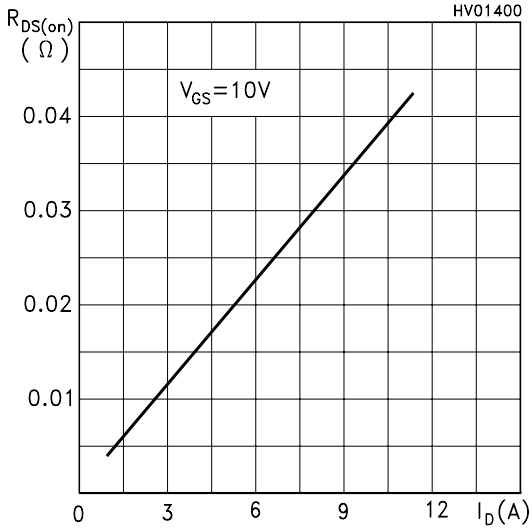

Gate Charge vs Gate-source Voltage

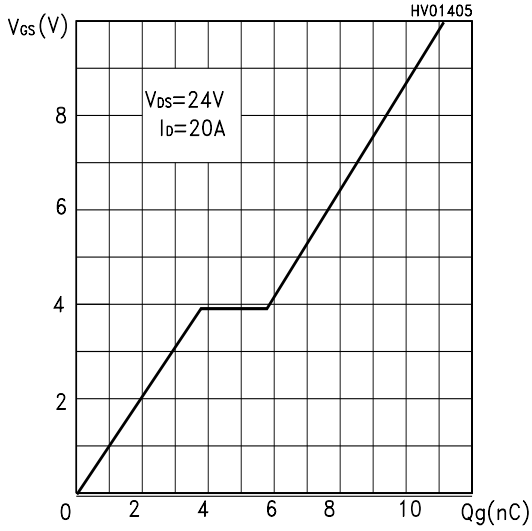

Capacitance Variations

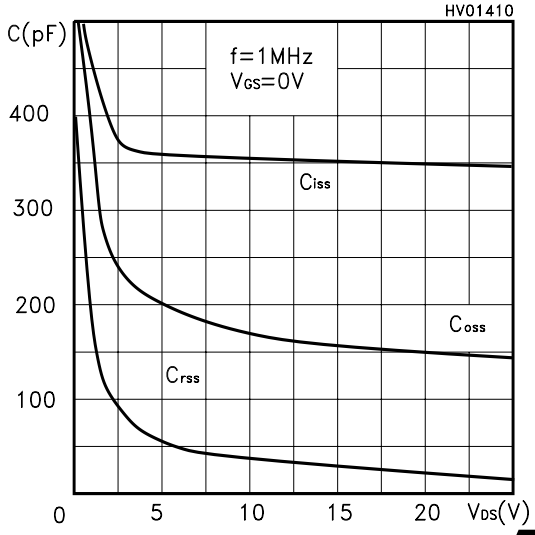

Normalized Gate Thereshold Voltage vs Temp.

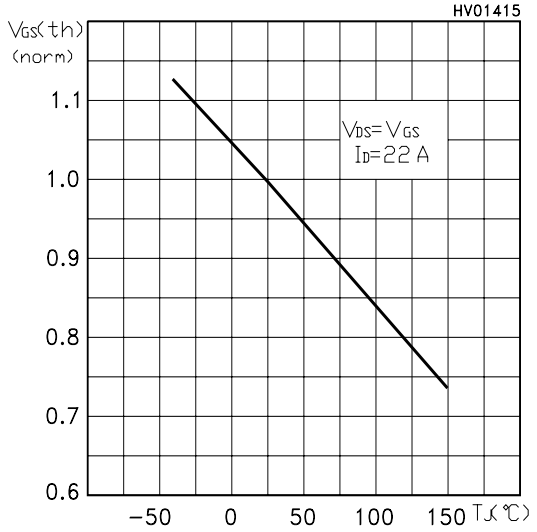

Normalized On Resistance vs Temperature

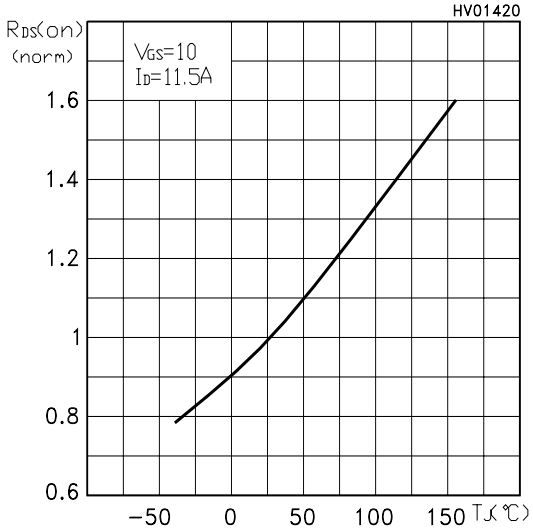

Source-drain Diode Forward Characteristics

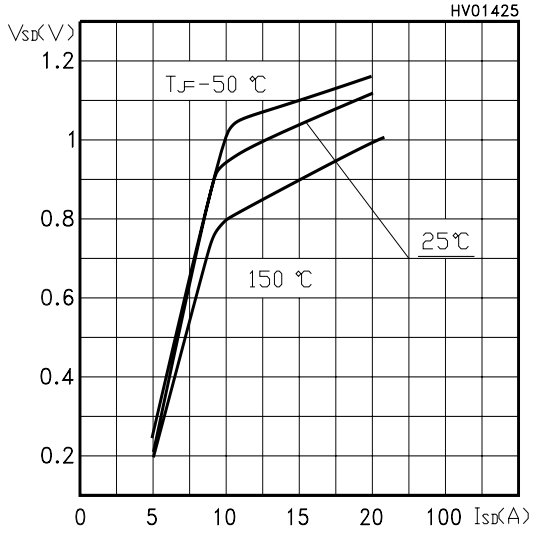

Fig. 1: Unclamped Inductive Load Test Circuit

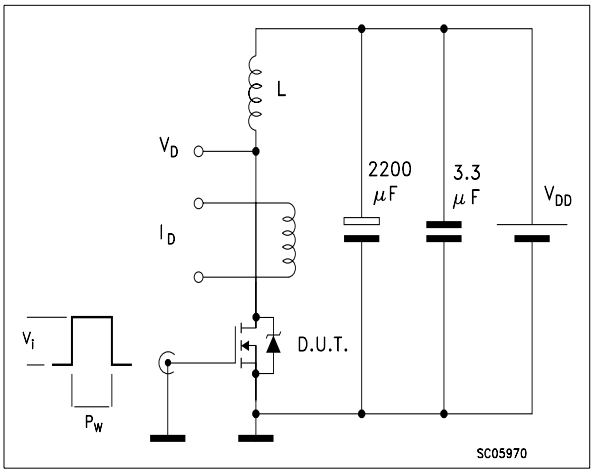

Fig. 2: Unclamped Inductive Waveform

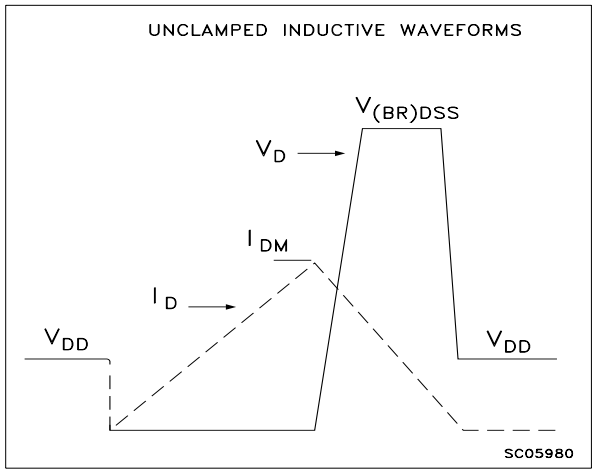

Fig. 3: Switching Times Test Circuit For Resistive Load

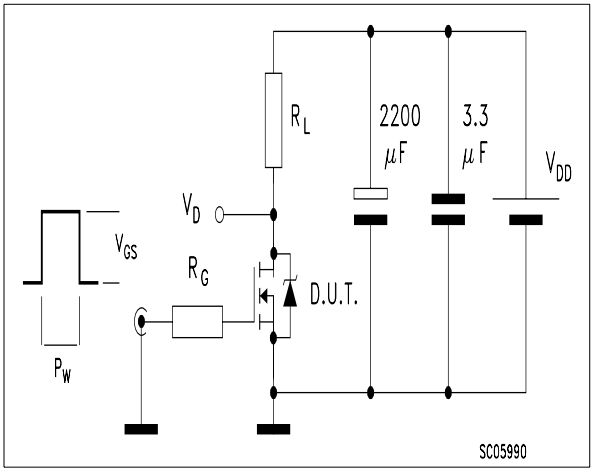

Fig. 4: Gate Charge test Circuit

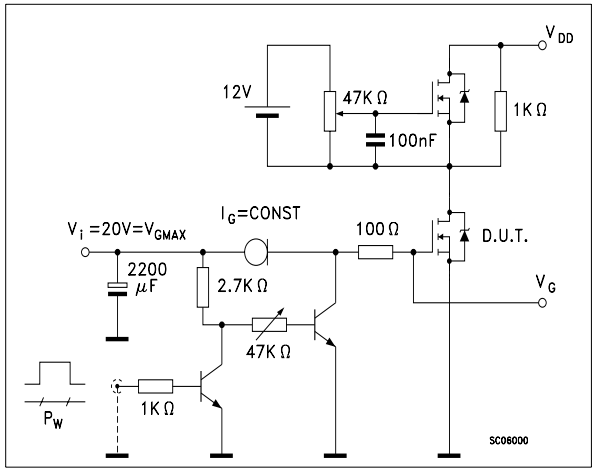

Fig. 5: Test Circuit For Inductive Load Switching And Diode Recovery Times

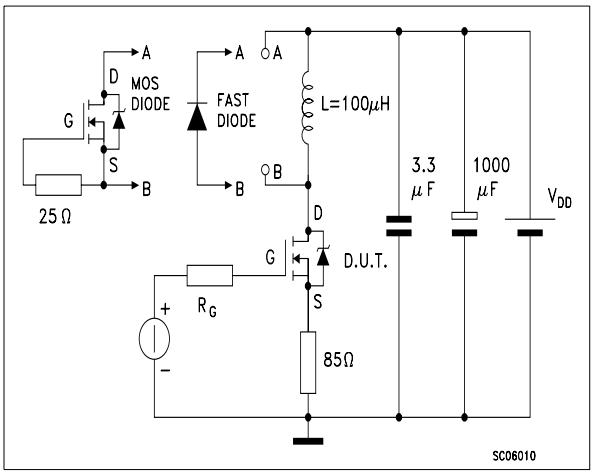

TO-252 (DPAK) MECHANICAL DATA

DIM.	mm			inch		
	MIN.	TYP.	MAX.	MIN.	TYP.	MAX.
A	2.20		2.40	0.087		0.094
A1	0.90		1.10	0.035		0.043
A2	0.03		0.23	0.001		0.009
B	0.64		0.90	0.025		0.035
B2	5.20		5.40	0.204		0.213
C	0.45		0.60	0.018		0.024
C2	0.48		0.60	0.019		0.024
D	6.00		6.20	0.236		0.244
E	6.40		6.60	0.252		0.260
G	4.40		4.60	0.173		0.181
H	9.35		10.10	0.368		0.398
L2		0.8			0.031	
L4	0.60		1.00	0.024		0.039
V2	0°		8°	0°		0°

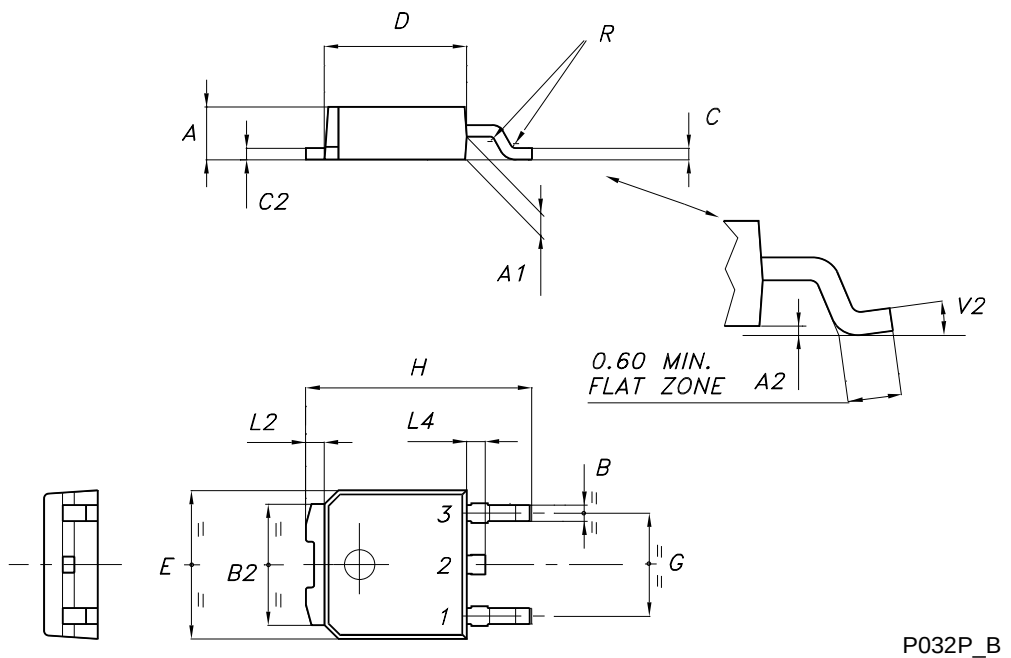

P032P_B

TO-251 (IPAK) MECHANICAL DATA

DIM.	mm			inch		
	MIN.	TYP.	MAX.	MIN.	TYP.	MAX.
A	2.2		2.4	0.086		0.094
A1	0.9		1.1	0.035		0.043
A3	0.7		1.3	0.027		0.051
B	0.64		0.9	0.025		0.031
B2	5.2		5.4	0.204		0.212
B3			0.85			0.033
B5		0.3			0.012	
B6			0.95			0.037
C	0.45		0.6	0.017		0.023
C2	0.48		0.6	0.019		0.023
D	6		6.2	0.236		0.244
E	6.4		6.6	0.252		0.260
G	4.4		4.6	0.173		0.181
H	15.9		16.3	0.626		0.641
L	9		9.4	0.354		0.370
L1	0.8		1.2	0.031		0.047
L2		0.8	1		0.031	0.039

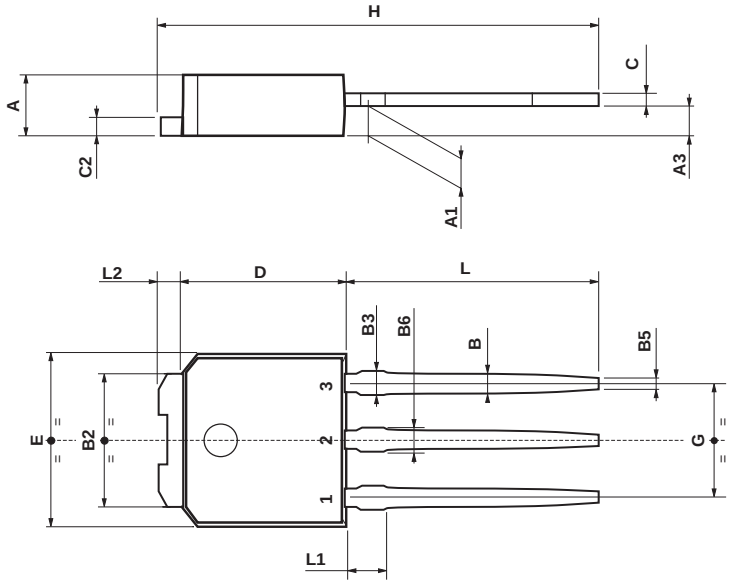

0068771-E

Information furnished is believed to be accurate and reliable. However, STMicroelectronics assumes no responsibility for the consequences of use of such information nor for any infringement of patents or other rights of third parties which may result from its use. No license is granted by implication or otherwise under any patent or patent rights of STMicroelectronics. Specification mentioned in this publication are subject to change without notice. This publication supersedes and replaces all information previously supplied. STMicroelectronics products are not authorized for use as critical components in life support devices or systems without express written approval of STMicroelectronics.

The ST logo is a trademark of STMicroelectronics

© 2000 STMicroelectronics – Printed in Italy – All Rights Reserved

STMicroelectronics GROUP OF COMPANIES

Australia - Brazil - China - Finland - France - Germany - Hong Kong - India - Italy - Japan - Malaysia - Malta - Morocco - Singapore - Spain - Sweden - Switzerland - United Kingdom - U.S.A.

http://www.st.com