STP20N20
STF20N20 - STD20N20

N-CHANNEL 200V - 0.10Ω - 18A TO-220/TO-220FP/DPAK
LOW GATE CHARGE STripFET™ II MOSFET

Table 1: General Features

TYPE	V_{DSS}	$R_{DS(on)}$	I_d	P_{TOT}
STD20N20	200 V	< 0.125 Ω	18 A	90 W
STF20N20	200 V	< 0.125 Ω	18 A	25 W
STP20N20	200 V	< 0.125 Ω	18 A	90 W

- TYPICAL R_{DS}(on) = 0.10 Ω
- EXCEPTIONAL dv/dt CAPABILITY
- LOW GATE CHARGE
- 100% AVALANCHE TESTED

DESCRIPTION

This MOSFET series realized with STMicroelectronics unique STripFET process has specifically been designed to minimize input capacitance and gate charge. It is therefore suitable as primary switch in advanced high-efficiency isolated DC-DC converters.

APPLICATIONS

- HIGH CURRENT SWITCHING APPLICATIONS
- HIGH EFFICIENCY DC-DC CONVERTERS
- PRIMARY SIDE SWITCH

Figure 1: Package

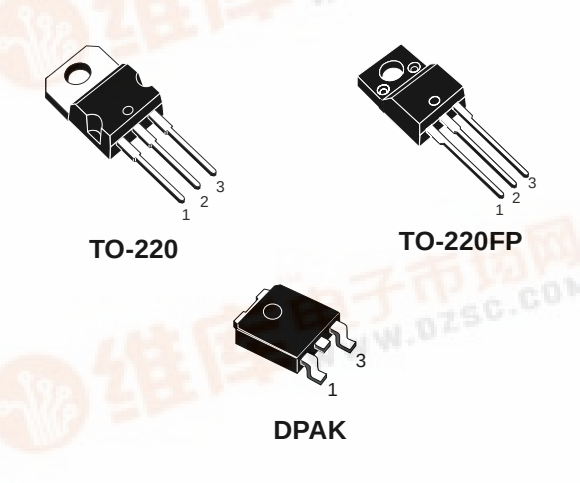

Figure 2: Internal Schematic Diagram

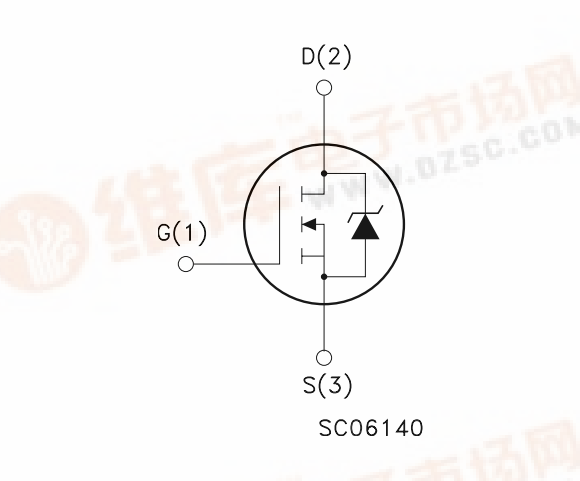

Table 2: Order Codes

SALES TYPE	MARKING	PACKAGE	PACKAGING
STD20N20T4	D20N20	DPAK	TAPE & REEL
STF20N20	F20N20	TO-220FP	TUBE
STP20N20	P20N20	TO-220	TUBE

Table 3: Absolute Maximum ratings

Symbol	Parameter	Value		Unit
		TO-220/DPAK	TO-220FP	
V_{DS}	Drain-source Voltage (V_{GS} = 0)	200		V
V_{DGR}	Drain-gate Voltage (R_{GS} = 20 kΩ)	200		V
V_{GS}	Gate- source Voltage	± 20		V
I_D	Drain Current (continuous) at T_C = 25°C	18		A
I_D	Drain Current (continuous) at T_C = 100°C	11		A
I_{DM} (•)	Drain Current (pulsed)	72		A
P_{TOT}	Total Dissipation at T_C = 25°C	90	25	W
	Derating Factor	0.72	0.2	W/°C
dv/dt (1)	Peak Diode Recovery voltage slope	15		V/ns
T_j T_{stg}	Operating Junction Temperature Storage Temperature	-50 to 150		°C

(•) Pulse width limited by safe operating area
(1) $I_{SD} \leq 18A$, di/dt ≤ 400A/µs, $V_{DD} \leq V_{(BR)DSS}$

Table 4: Thermal Data

		TO-220	DPAK	TO-220FP	
Rthj-case	Thermal Resistance Junction-case Max	1.38	1.38	5	°C/W
Rthj-amb	Thermal Resistance Junction-ambient Max	62.5	50(#)	62.5	°C/W
T_l	Maximum Lead Temperature For Soldering Purpose	300			°C

(#) When mounted on 1inch² FR-4, 2 Oz copper board.

Table 5: Avalanche Characteristics

Symbol	Parameter	Max Value	Unit
I_{AR}	Avalanche Current, Repetitive or Not-Repetitive (pulse width limited by T_j max)	18	A
E_{AS}	Single Pulse Avalanche Energy (starting T_j = 25 °C, $I_D = I_{AR}$, V_{DD} = 50 V)	110	mJ

ELECTRICAL CHARACTERISTICS (T_{CASE} =25°C UNLESS OTHERWISE SPECIFIED)

Table 6: On/Off

Symbol	Parameter	Test Conditions	Min.	Typ.	Max.	Unit
$V_{(BR)DSS}$	Drain-source Breakdown Voltage	I_D = 1 mA, V_{GS} = 0	200			V
I_{DSS}	Zero Gate Voltage Drain Current (V_{GS} = 0)	V_{DS} = Max Rating V_{DS} = Max Rating, T_C = 125 °C			1 10	µA µA
I_{GSS}	Gate-body Leakage Current (V_{DS} = 0)	V_{GS} = ± 20V			±100	nA
$V_{GS(th)}$	Gate Threshold Voltage	$V_{DS} = V_{GS}$, I_D = 250 µA	2	3	4	V
$R_{DS(on)}$	Static Drain-source On Resistance	V_{GS} = 10V, I_D = 10 A		0.10	0.125	Ω

ELECTRICAL CHARACTERISTICS (CONTINUED)

Table 7: Dynamic

Symbol	Parameter	Test Conditions	Min.	Typ.	Max.	Unit
g_{fs} (1)	Forward Transconductance	V_{DS} = 25 V, I_D= 10 A		13		S
C_{iss} C_{oss} C_{rss}	Input Capacitance Output Capacitance Reverse Transfer Capacitance	V_{DS} = 25V, f = 1 MHz, V_{GS} = 0		940 197 30		pF pF pF
$t_{d(on)}$ t_r $t_{d(off)}$ t_r	Turn-on Delay Time Rise Time Turn-off Delay Time Fall Time	V_{DD} = 100 V, I_D = 10 A, R_G= 4.7 Ω V_{GS} = 10 V (see Figure 17)		15 30 40 10		ns ns ns ns
Q_g Q_{gs} Q_{gd}	Total Gate Charge Gate-Source Charge Gate-Drain Charge	V_{DD} = 160V, I_D = 20 A, V_{GS} = 10V (see Figure 20)		28 5.6 14.5	39	nC nC nC

Table 8: Source Drain Diode

Symbol	Parameter	Test Conditions	Min.	Typ.	Max.	Unit
I_{SD} I_{SDM} (2)	Source-drain Current Source-drain Current (pulsed)				18 72	A A
V_{SD} (1)	Forward On Voltage	I_{SD} = 20 A, V_{GS} = 0			1.6	V
t_{rr} Q_{rr} I_{RRM}	Reverse Recovery Time Reverse Recovery Charge Reverse Recovery Current	I_{SD} = 20 A, di/dt = 100A/µs V_{DD} = 50V, T_j = 25°C (see Figure 18)		155 775 10		ns nC A
t_{rr} Q_{rr} I_{RRM}	Reverse Recovery Time Reverse Recovery Charge Reverse Recovery Current	I_{SD} = 20 A, di/dt = 100A/µs V_{DD} = 50V, T_j = 150°C (see Figure 18)		183 1061 11.6		ns nC A

(1) Pulsed: Pulse duration = 300 µs, duty cycle 1.5 %.
(2) Pulse width limited by safe operating area.

Figure 3: Safe Operating Area For TO-220/ DPAK

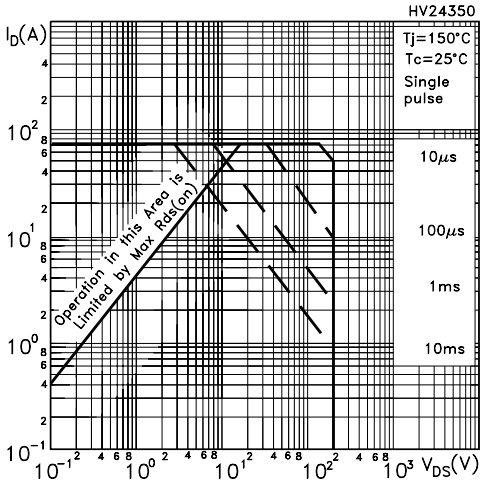

Figure 6: Thermal Impedance For TO-220/ DPAK

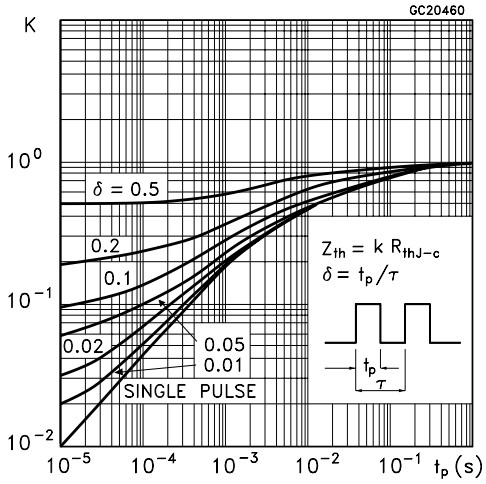

Figure 4: Safe Operating Area For TO-220FP

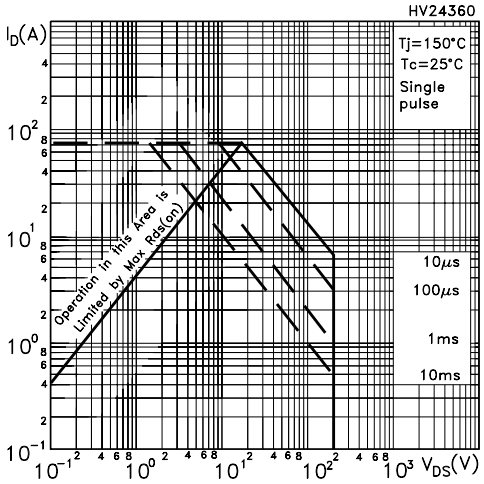

Figure 7: Thermal Impedance For TO-220FP

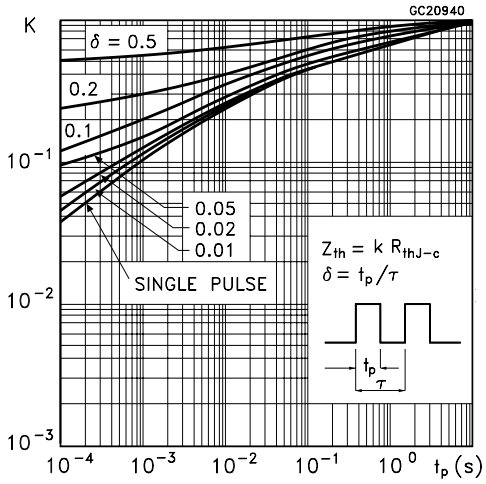

Figure 5: Output Characteristics

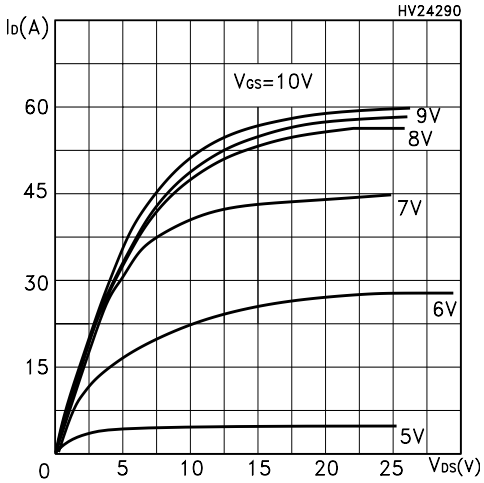

Figure 8: Transfer Characteristics

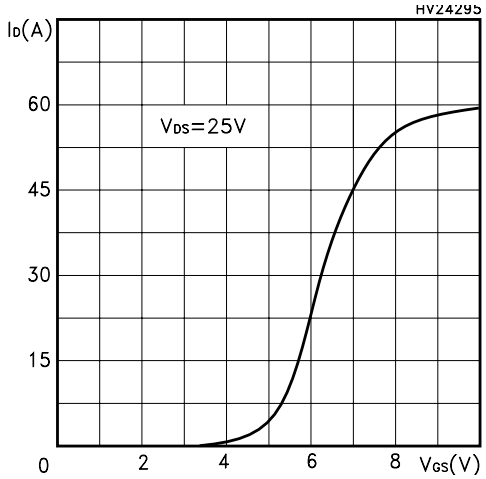

Figure 9: Transconductance

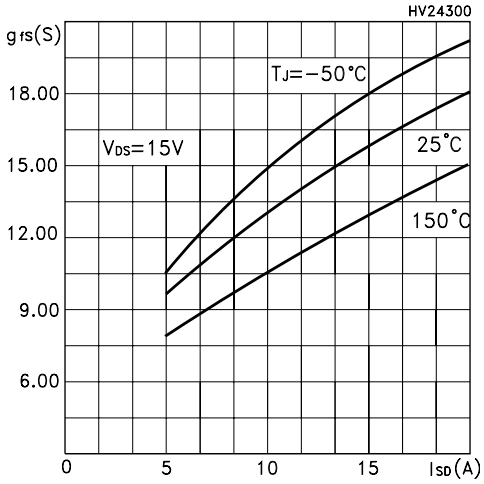

Figure 10: Gate Charge vs Gate-source Voltage

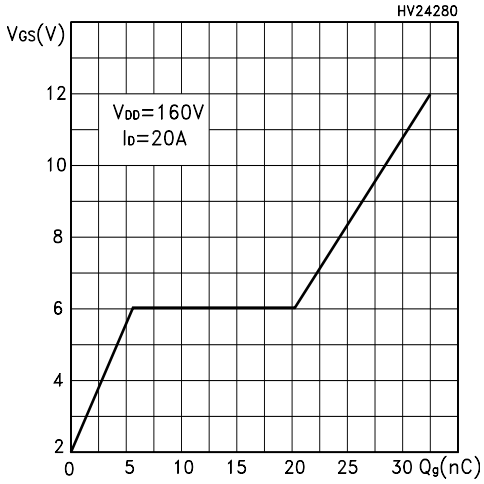

Figure 11: Normalized Gate Threshold Voltage vs Temperature

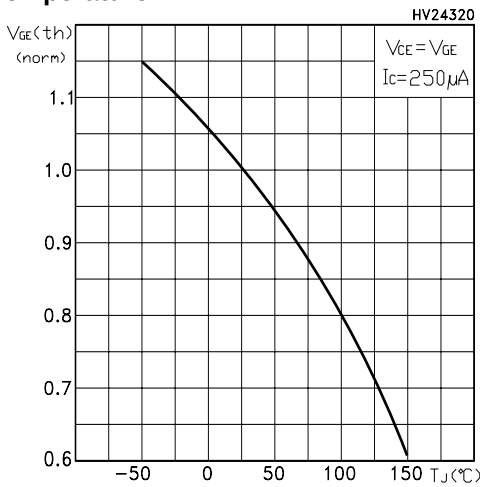

Figure 12: Static Drain-source On Resistance

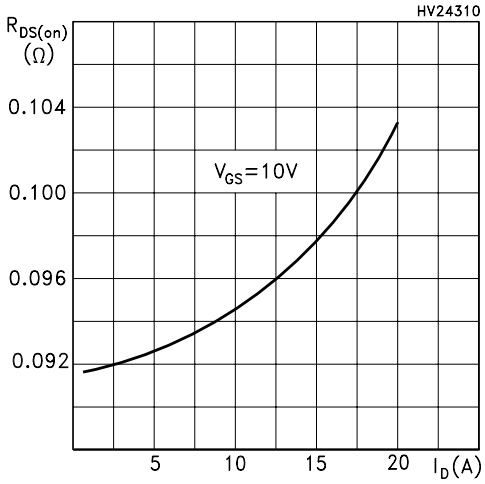

Figure 13: Capacitance Variations

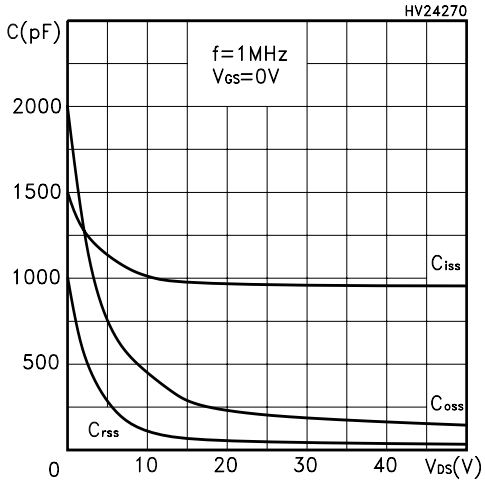

Figure 14: Normalized On Resistance vs Temperature

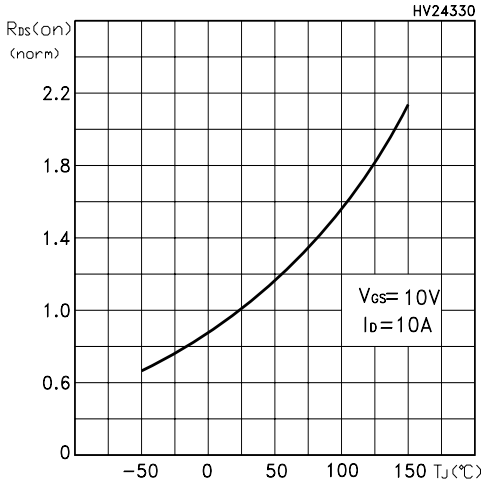

Figure 15: Source-Drain Forward Characteristics

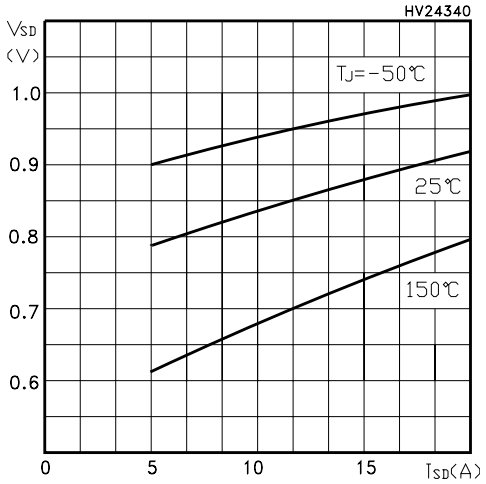

Figure 16: Unclamped Inductive Load Test Circuit

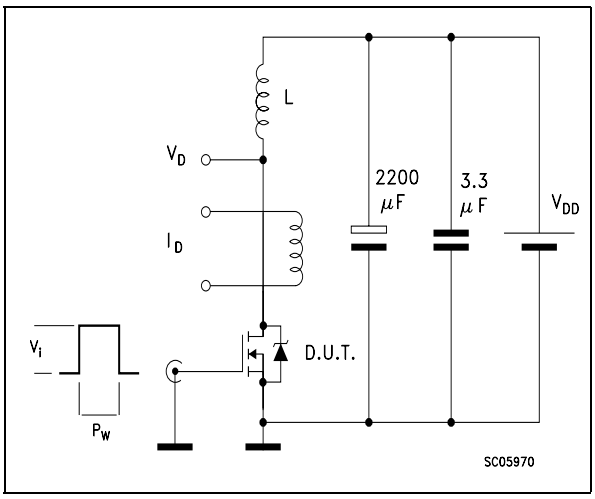

Figure 17: Switching Times Test Circuit For Resistive Load

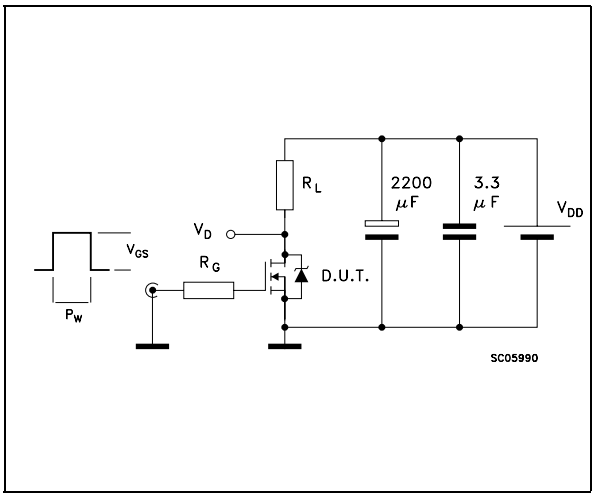

Figure 18: Test Circuit For Inductive Load Switching and Diode Recovery Times

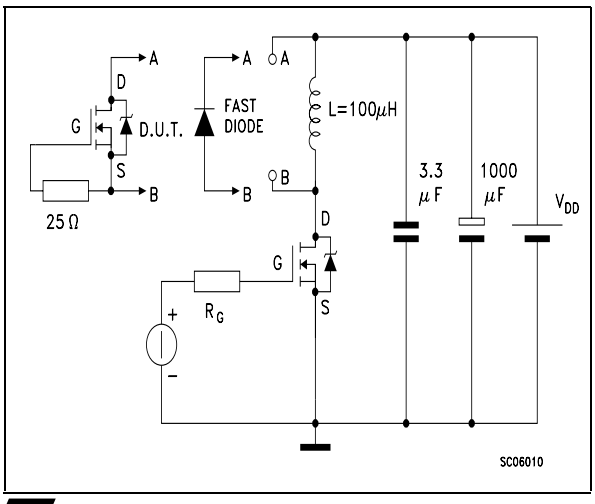

Figure 19: Unclamped Inductive Wafeform

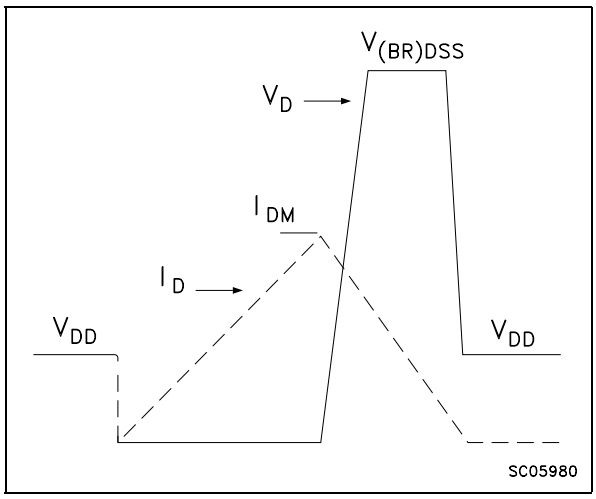

Figure 20: Gate Charge Test Circuit

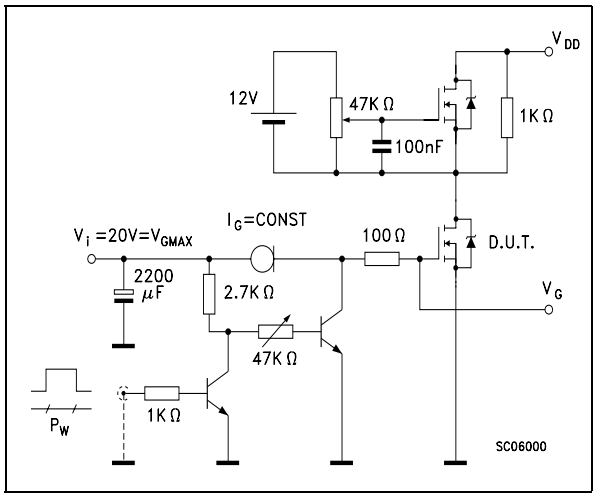

TO-220 MECHANICAL DATA

DIM.	mm.			inch		
	MIN.	TYP	MAX.	MIN.	TYP.	MAX.
A	4.40		4.60	0.173		0.181
b	0.61		0.88	0.024		0.034
b1	1.15		1.70	0.045		0.066
c	0.49		0.70	0.019		0.027
D	15.25		15.75	0.60		0.620
E	10		10.40	0.393		0.409
e	2.40		2.70	0.094		0.106
e1	4.95		5.15	0.194		0.202
F	1.23		1.32	0.048		0.052
H1	6.20		6.60	0.244		0.256
J1	2.40		2.72	0.094		0.107
L	13		14	0.511		0.551
L1	3.50		3.93	0.137		0.154
L20		16.40			0.645	
L30		28.90			1.137	
øP	3.75		3.85	0.147		0.151
Q	2.65		2.95	0.104		0.116

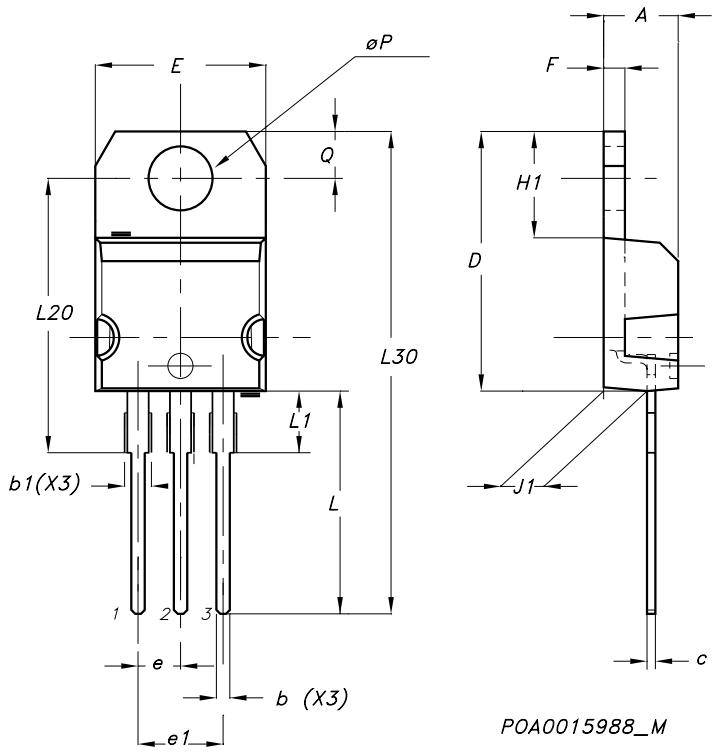

TO-220FP MECHANICAL DATA

DIM.	mm.			inch		
	MIN.	TYP	MAX.	MIN.	TYP.	MAX.
A	4.4		4.6	0.173		0.181
B	2.5		2.7	0.098		0.106
D	2.5		2.75	0.098		0.108
E	0.45		0.7	0.017		0.027
F	0.75		1	0.030		0.039
F1	1.15		1.7	0.045		0.067
F2	1.15		1.7	0.045		0.067
G	4.95		5.2	0.195		0.204
G1	2.4		2.7	0.094		0.106
H	10		10.4	0.393		0.409
L2		16			0.630	
L3	28.6		30.6	1.126		1.204
L4	9.8		10.6	.0385		0.417
L5	2.9		3.6	0.114		0.141
L6	15.9		16.4	0.626		0.645
L7	9		9.3	0.354		0.366
Ø	3		3.2	0.118		0.126

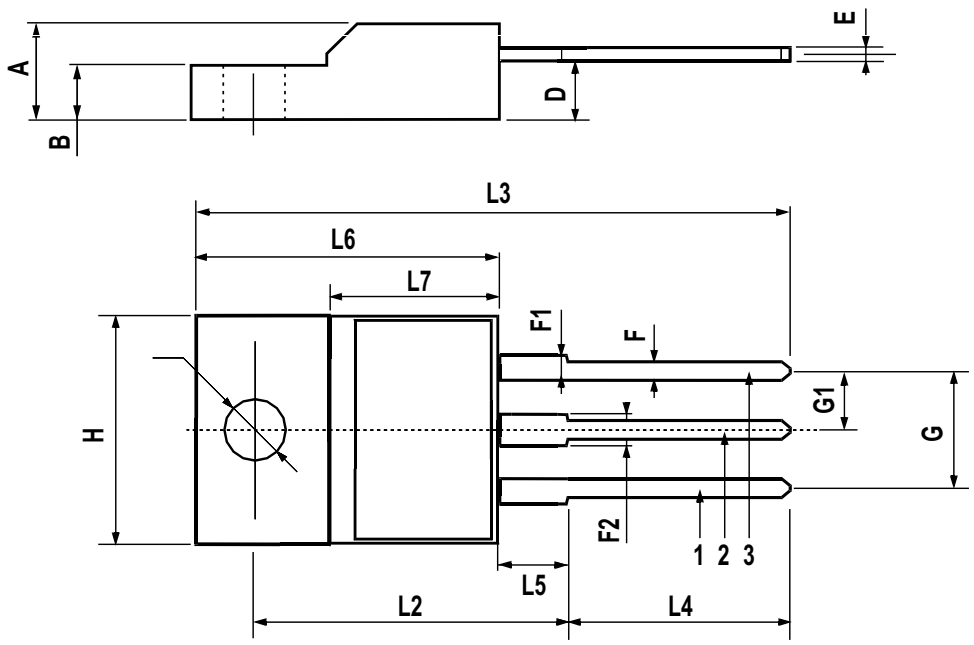

TO-252 (DPAK) MECHANICAL DATA

DIM.	mm			inch		
	MIN.	TYP.	MAX.	MIN.	TYP.	MAX.
A	2.20		2.40	0.087		0.094
A1	0.90		1.10	0.035		0.043
A2	0.03		0.23	0.001		0.009
B	0.64		0.90	0.025		0.035
B2	5.20		5.40	0.204		0.213
C	0.45		0.60	0.018		0.024
C2	0.48		0.60	0.019		0.024
D	6.00		6.20	0.236		0.244
E	6.40		6.60	0.252		0.260
G	4.40		4.60	0.173		0.181
H	9.35		10.10	0.368		0.398
L2		0.8			0.031	
L4	0.60		1.00	0.024		0.039
V2	0°		8°	0°		0°

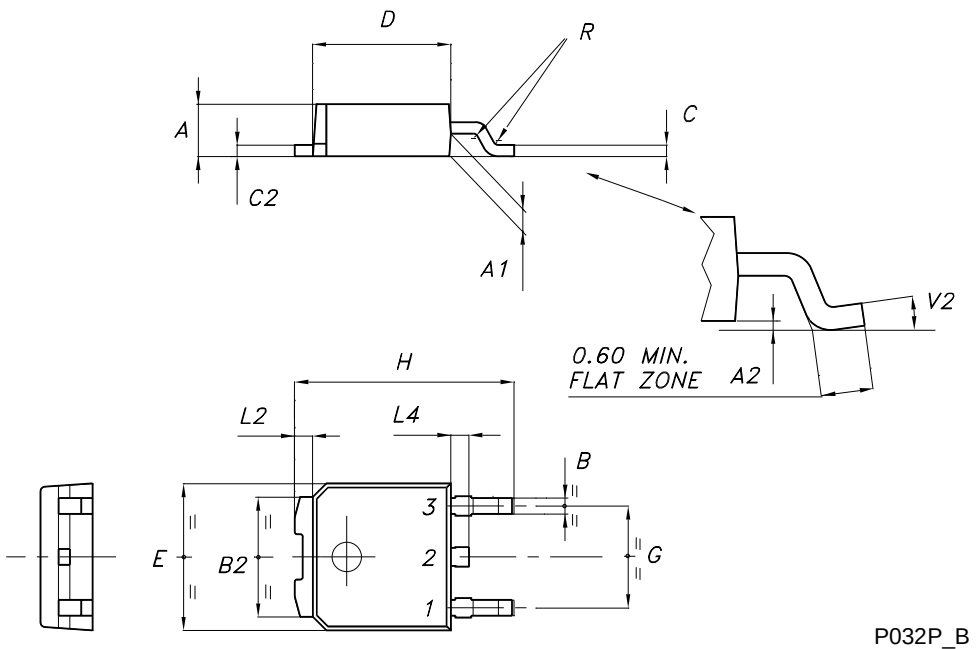

P032P_B

DPAK FOOTPRINT

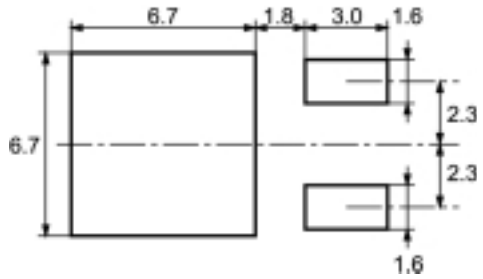

All dimensions are in millimeters

TUBE SHIPMENT (no suffix)*

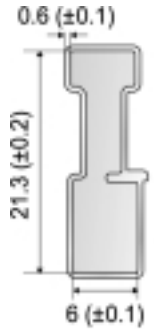

BASE QTY
75

BULK QTY
3000

Tube length 532 (±0.5)

All dimensions are in millimeters

TAPE AND REEL SHIPMENT (suffix "T4")*

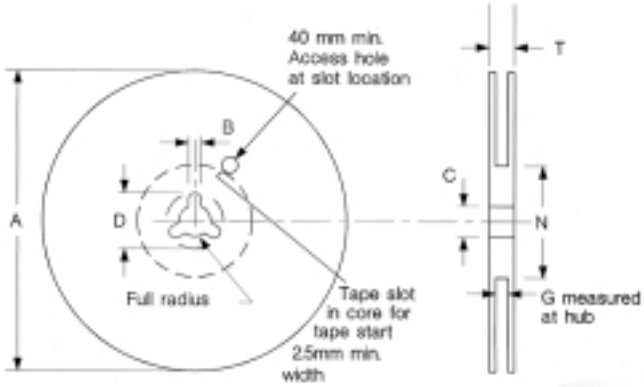

REEL MECHANICAL DATA

DIM.	mm		inch	
	MIN.	MAX.	MIN.	MAX.
A		330		12.992
B	1.5		0.059	
C	12.8	13.2	0.504	0.520
D	20.2		0.795	
G	16.4	18.4	0.645	0.724
N	50		1.968	
T		22.4		0.881

BASE QTY	BULK QTY
2500	2500

TAPE MECHANICAL DATA

DIM.	mm		inch	
	MIN.	MAX.	MIN.	MAX.
A0	6.8	7	0.267	0.275
B0	10.4	10.6	0.409	0.417
B1		12.1		0.476
D	1.5	1.6	0.059	0.063
D1	1.5		0.059	
E	1.65	1.85	0.065	0.073
F	7.4	7.6	0.291	0.299
K0	2.55	2.75	0.100	0.108
P0	3.9	4.1	0.153	0.161
P1	7.9	8.1	0.311	0.319
P2	1.9	2.1	0.075	0.082
R	40		1.574	
W	15.7	16.3	0.618	0.641

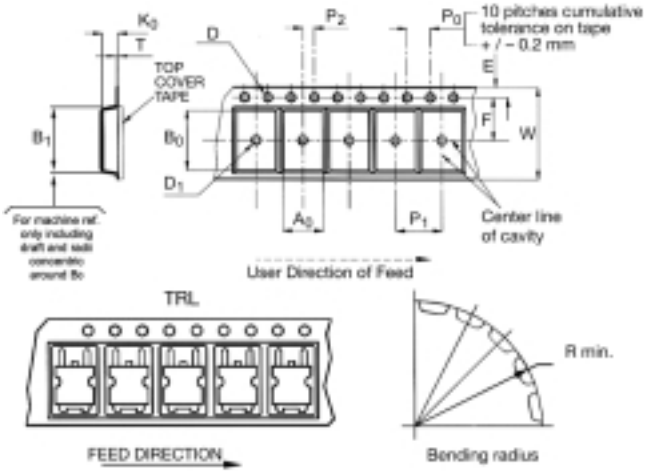

* on sales type

Table 9: Revision History

Date	Revision	Description of Changes
06-Dec-2004	1	Data Brief
07-Dec-2004	2	First Revision
12-Jan-2005	3	Final datasheet