查询STGD5NB120SZ供应商 捷多邦，专业PCB打样工厂，24小时加急出货

STGD5NB120SZ-1
STGD5NB120SZ

N-CHANNEL 5A - 1200V DPAK/IPAK INTERNALLY CLAMPED PowerMESH™ IGBT

Table 1: General Features

TYPE	V_{CES}	$V_{CE(sat)}$	I_C
STGD5NB120SZ	1200 V	< 2.0 V	5 A
STGD5NB120SZ-1	1200 V	< 2.0 V	5 A

- HIGH INPUT IMPEDANCE (VOLTAGE DRIVEN)
- LOW ON-VOLTAGE DROP (V_{cesat})
- HIGHT CURRENT CAPABILITY
- OFF LOSSES INCLUDE TAIL CURRENT
- HIGH VOLTAGE CLAMPING FEATURES

Figure 1: Package

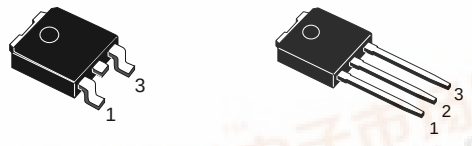

DESCRIPTION

Using the latest high voltage technology based on a patented strip layout, STMicroelectronics has designed an advanced family of IGBTs, the PowerMESH™ IGBTs, with outstanding performances. The suffix "S" identifies a family optimized achieve minimum on-voltage drop for low frequency applications (<1kHz). The built in collector-gate zener exibits a very precise active clamping.

Figure 2: Internal Schematic Diagram

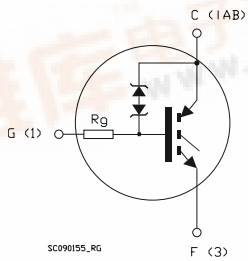

APPLICATIONS

- LIGHT DIMMER
- INRUSH CURRENT LIMITATION
- PRE-HEATING FOR ELECTRONIC LAMP BALLAST

Table 2: Order Code

PART NUMBER	MARKING	PACKAGE	PACKAGING
STGD5NB120SZT4	GD5NB120SZ	DPAK	TAPE & REEL
STGD5NB120SZ-1	GD5NB120SZ	IPAK	TUBE

找PDF 维库一下 pdf.dzsc.com

Table 3: Absolute Maximum ratings

Symbol	Parameter	Value	Unit
V_{CES}	Collector-Emitter Voltage (V_{GS} = 0)	1200	V
V_{ECR}	Emitter-Collector Voltage	20	V
V_{GE}	Gate-Emitter Voltage	±20	V
I_C	Collector Current (continuous) at T_C = 25°C	10	A
I_C	Collector Current (continuous) at T_C = 100°C	5	A
I_{CM} (▪)	Collector Current (pulsed)	20	A
P_{TOT}	Total Dissipation at T_C = 25°C	55	W
	Derating Factor	0.44	W/°C
Eas (1)	Single Pulse Avalanche Energy at T_j = 25°C Single Pulse Avalanche Energy at T_j = 100°C	10 7	mJ mJ
T_{stg}	Storage Temperature	–55 to 150	°C
T_j	Operating Junction Temperature range	150	°C

(▪) Pulse width limited by safe operating area
(1) V_{CE} = 50 V , I_{AV} = 3.3 A

Table 4: Thermal Data

		Min.	Typ.	Max.	
Rthj-case	Thermal Resistance Junction-case			2.27	°C/W
Rthj-amb	Thermal Resistance Junction-ambient			100	°C/W

ELECTRICAL CHARACTERISTICS (T_{CASE} =25°C UNLESS OTHERWISE SPECIFIED)

Table 5: On/Off

Symbol	Parameter	Test Conditions	Min.	Typ.	Max.	Unit
$V_{BR(CES)}$	Collector-Emitter Breakdown Voltage	I_C = 10 mA, V_{GE} = 0 V	1200			V
I_{CES}	Collector cut-off Current (V_{GE} = 0)	V_{CE} = 900 V V_{CE} = 900 V, T_j = 125 °C			50 250	µA µA
I_{GES}	Gate-Emitter Leakage Current (V_{CE} = 0)	V_{GE} = ±20V , V_{CE} = 0 V			±100	nA
$V_{GE(th)}$	Gate Threshold Voltage	V_{CE} = V_{GE}, I_C = 250 µA	2		5	V
V_{GE}	Gate Emitter Voltage	V_{CE} =2.5 V, I_C = 2 A, Tj = 25÷125°C			6.5	V
$V_{CE(sat)}$	Collector-Emitter Saturation Voltage	V_{GE} = 15V, I_C = 5 A V_{GE} = 15V, I_C = 5 A, Tj =125°C		1.3 1.2	2.0	V V

ELECTRICAL CHARACTERISTICS (CONTINUED)

Table 6: Dynamic

Symbol	Parameter	Test Conditions	Min.	Typ.	Max.	Unit
g_{fs}	Forward Transconductance	V_{CE} = 25 V , I_C = 5 A		5		S
C_{ies}(*) C_{oes}(*) C_{res}(*)	Input Capacitance Output Capacitance Reverse Transfer Capacitance	V_{CE} = 25V, f = 1 MHz, V_{GE} = 0V		430 40 7		pF pF pF
R_g	Gate Resistance			4		KΩ

(1) Pulsed: Pulse duration= 300 µs, duty cycle 1.5%

Table 7: Switching On

Symbol	Parameter	Test Conditions	Min.	Typ.	Max.	Unit
$t_{d(on)}$ t_r $(di/dt)_{on}$	Delay Time Current Rise Time Turn-on Current Slope	I_C = 5 A , V_{CC} = 960 V V_{GE} = 15 V , R_{drive} = 1KΩ Tj = 25°C		690 170 39.6		ns ns A/µs
$t_{d(on)}$ t_r $(di/dt)_{on}$	Dealy Time Current Rise Time Turn-on Current Slope	I_{CC} = 5 A , V_{CC} = 960 V V_{GE} = 15 V , R_{drive} = 1KΩ Tj = 125°C		600 185 39		ns ns A/µs

Table 8: Switching Off

Symbol	Parameter	Test Conditions	Min.	Typ.	Max.	Unit
t_c $t_r(V_{off})$ $t_d(_{off})$ t_f	Cross-over Time Off Voltage Rise Time Delay Time Current Fall Time	I_C = 5 A , V_{CC} = 960 V V_{GE} = 15 V , R_{drive} = 1KΩ Tj = 25°C		4 2.2 12.1 1.13		µs µs µs µs
t_c $t_r(V_{off})$ $t_d(_{off})$ t_f	Cross-over Time Off Voltage Rise Time Delay Time Current Fall Time	I_C = 5 A , V_{CC} = 960 V V_{GE} = 15 V , R_{drive} = 1KΩ Tj = 125°C		5 2.2 12.1 2		µs µs µs µs

Table 9: Switching Energy

Symbol	Parameterr	Test Conditions	Min.	Typ.	Max	Unit
Eon (2) E_{off} (3) E_{ts}	Turn-on Switching Losses Turn-off Switching Loss Total Switching Loss	V_{CC} = 800 V, I_C = 3 A R_G= 10 Ω, V_{GE}= 15V, Tj= 25°C (see Figure 18)		2.59 9 11.59		mJ mJ mJ
Eon (2) E_{off} (3) E_{ts}	Turn-on Switching Losses Turn-off Switching Loss Total Switching Loss	V_{CC} = 800 V, I_C = 3 A R_G= 10 Ω, V_{GE}= 15V, Tj= 125°C (see Figure 18)		2.64 10.2 12.68		mJ mJ mJ

(2) Eon is the turn-on losses when a typical diode is used in the test circuit in figure 2.
(3) Turn-off losses include also the tail of the collector current.

Table 10: Functional Test

Symbol	Parameterr	Test Conditions	Min.	Typ.	Max	Unit
Ias	Unclamped inductive switching current	V_{CC} = 50 V, L= 1.8 mH T_{start} = 25°C, R_{drive} = 1KΩ	3.3			A
I_{CL}	Latching Current	V_{CLAMP} = 960 V, Tj =125°C R_{drive} = 1KΩ		10		A

Figure 3: Output Characteristics

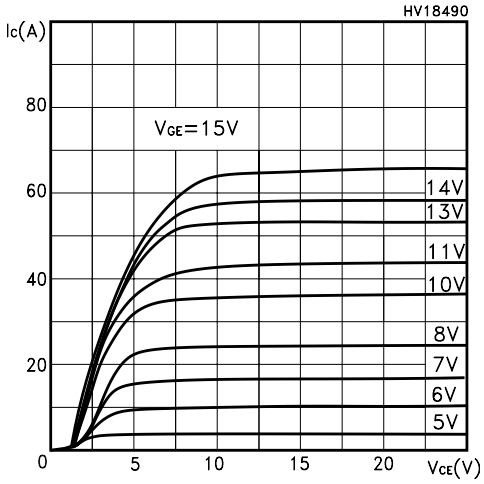

Figure 4: Transconductance

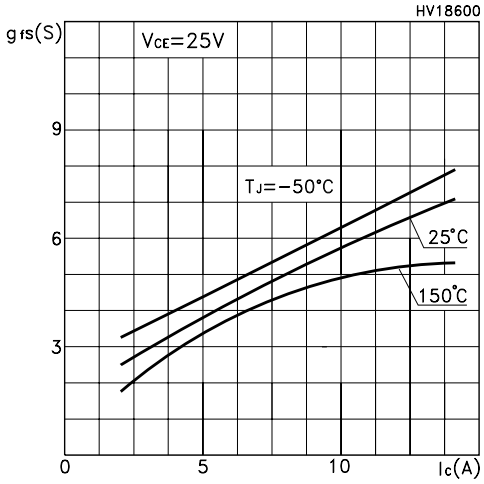

Figure 5: Collector-Emitter On Voltage vs Collector Current

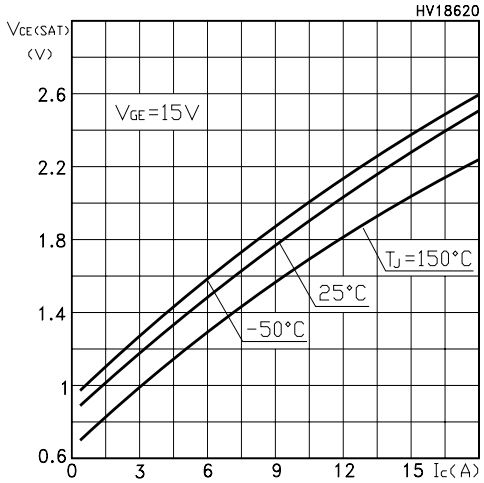

Figure 6: Transfer Characteristics

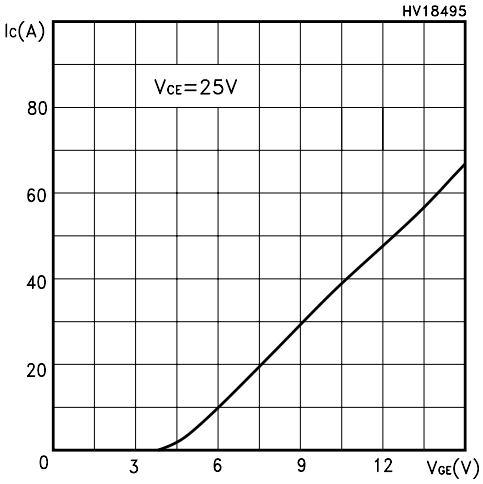

Figure 7: Collector-Emitter On Voltage vs Temperature

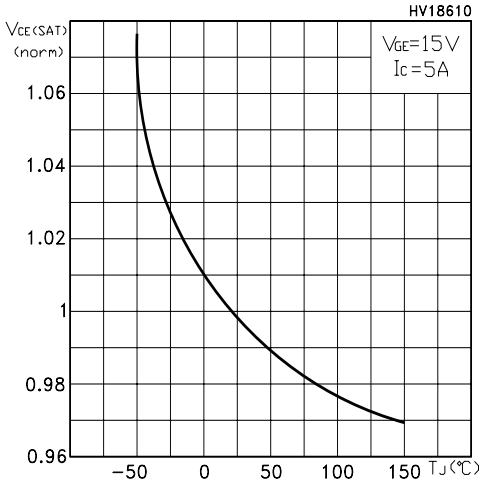

Figure 8: Normalized Gate Threshold vs Temperature

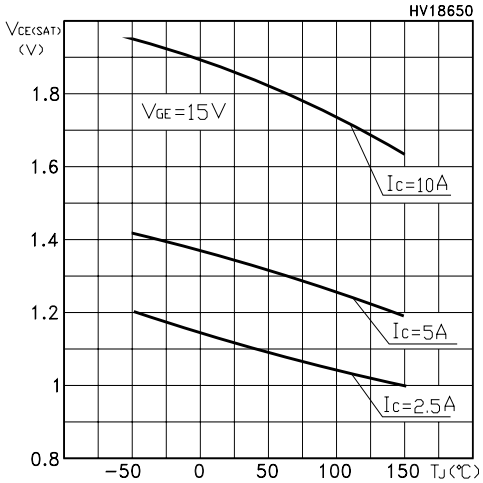

Figure 9: Gate Threshold vs Temperature

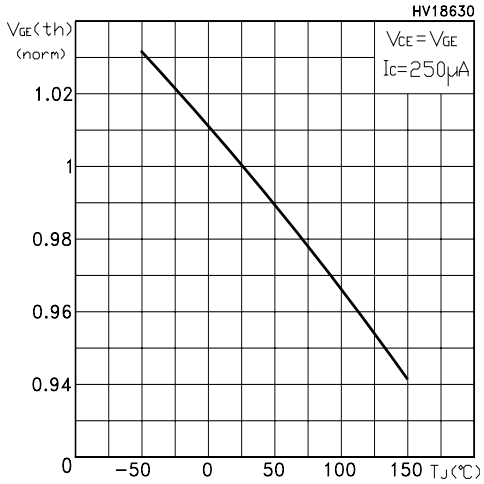

Figure 10: Capacitance Variations

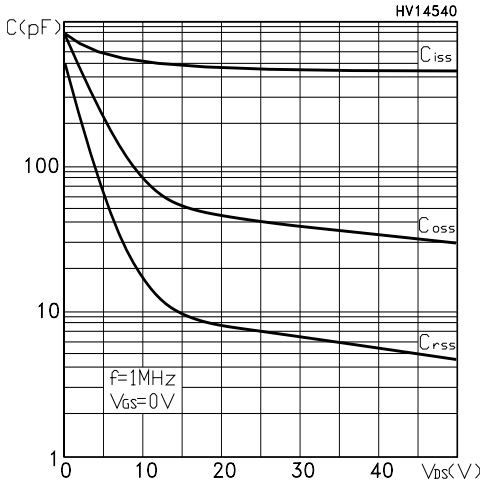

Figure 11: Switching Losses vs Gate Resistance

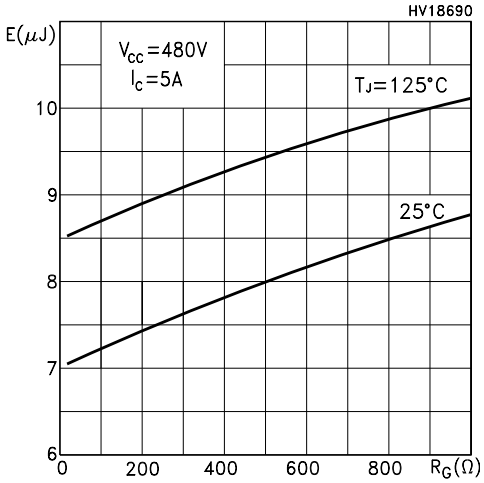

Figure 12: Breakdown Voltage vs Temperature

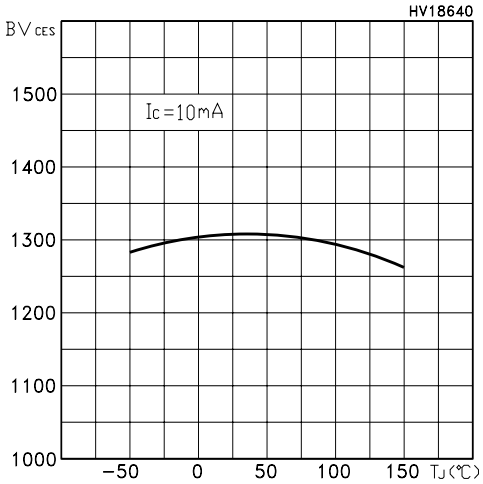

Figure 13: Gate-Charge vs Gate-Emitter Voltage

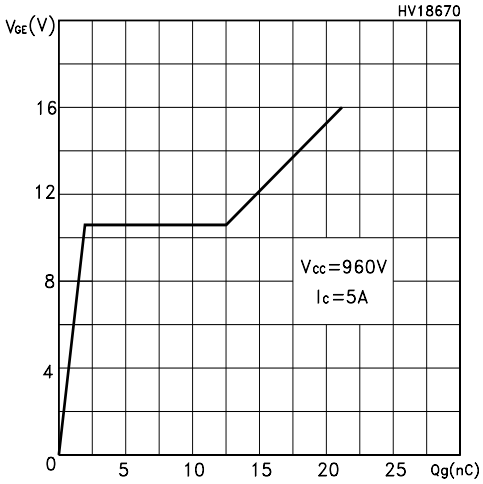

Figure 14: Switching Losses vs Collector Current

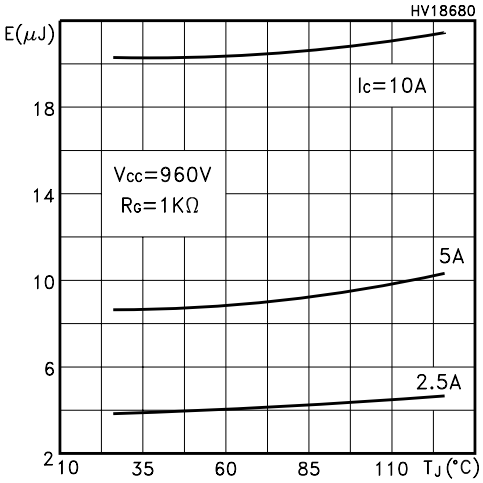

Figure 15: Thermal Impedance

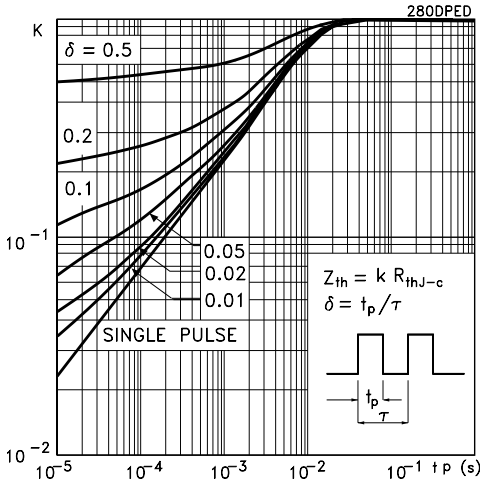

Figure 16: Turn-Off SOA

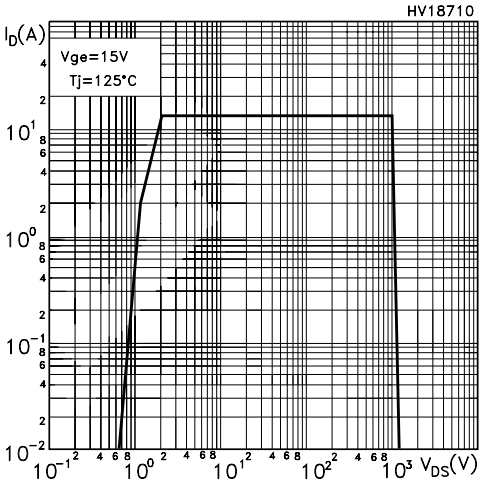

Figure 17: Test Circuit for Inductive Load Switching

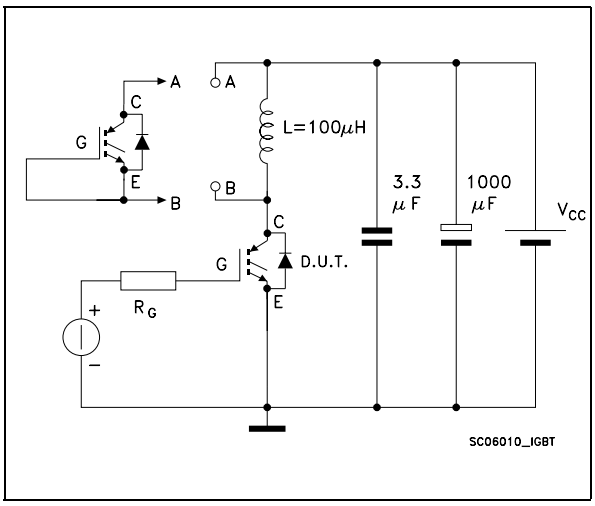

Figure 18: Switching Waveforms

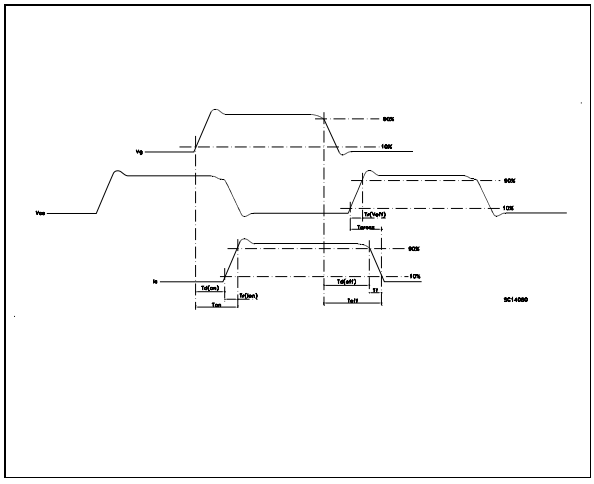

Figure 19: Gate Charge Test Circuit

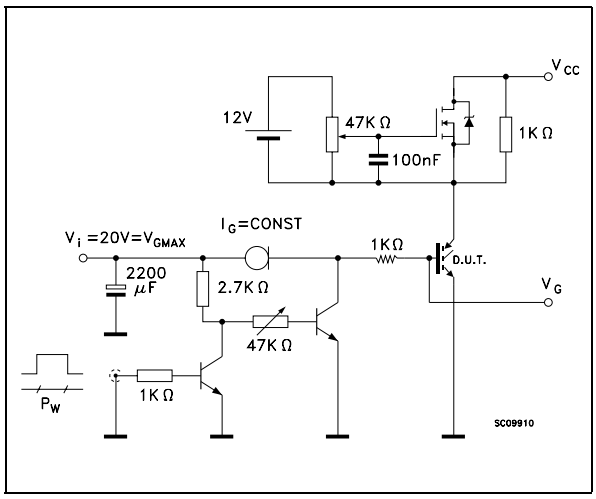

Figure 20: Diode Recovery Time Waveforms

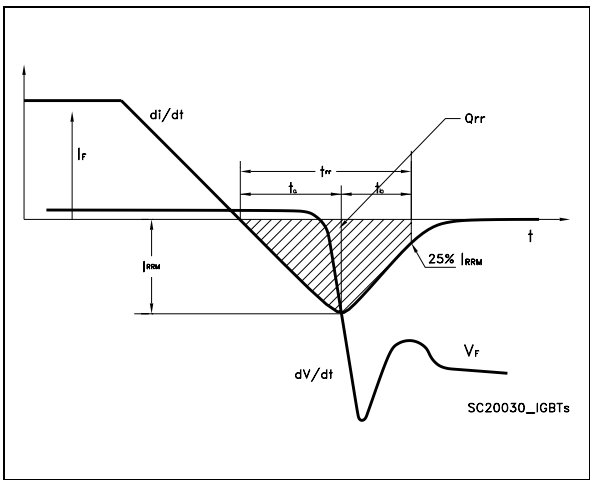

TO-252 (DPAK) MECHANICAL DATA

DIM.	mm			inch		
	MIN.	TYP.	MAX.	MIN.	TYP.	MAX.
A	2.20		2.40	0.087		0.094
A1	0.90		1.10	0.035		0.043
A2	0.03		0.23	0.001		0.009
B	0.64		0.90	0.025		0.035
B2	5.20		5.40	0.204		0.213
C	0.45		0.60	0.018		0.024
C2	0.48		0.60	0.019		0.024
D	6.00		6.20	0.236		0.244
E	6.40		6.60	0.252		0.260
G	4.40		4.60	0.173		0.181
H	9.35		10.10	0.368		0.398
L2		0.8			0.031	
L4	0.60		1.00	0.024		0.039
V2	0°		8°	0°		0°

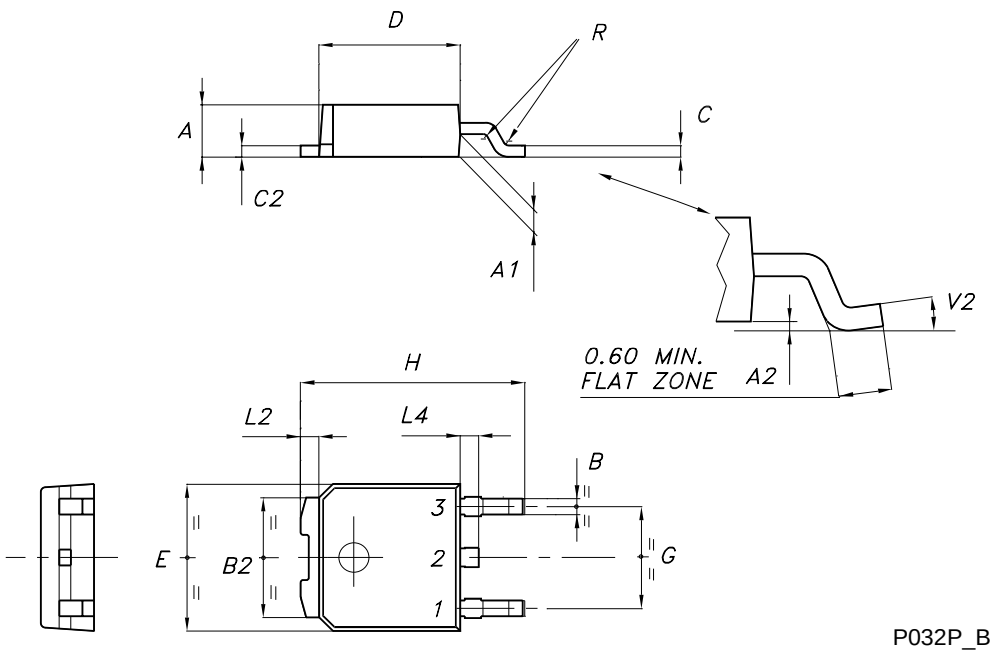

P032P_B

TO-251 (IPAK) MECHANICAL DATA

DIM.	mm			inch		
	MIN.	TYP.	MAX.	MIN.	TYP.	MAX.
A	2.2		2.4	0.086		0.094
A1	0.9		1.1	0.035		0.043
A3	0.7		1.3	0.027		0.051
B	0.64		0.9	0.025		0.031
B2	5.2		5.4	0.204		0.212
B3			0.85			0.033
B5		0.3			0.012	
B6			0.95			0.037
C	0.45		0.6	0.017		0.023
C2	0.48		0.6	0.019		0.023
D	6		6.2	0.236		0.244
E	6.4		6.6	0.252		0.260
G	4.4		4.6	0.173		0.181
H	15.9		16.3	0.626		0.641
L	9		9.4	0.354		0.370
L1	0.8		1.2	0.031		0.047
L2		0.8	1		0.031	0.039

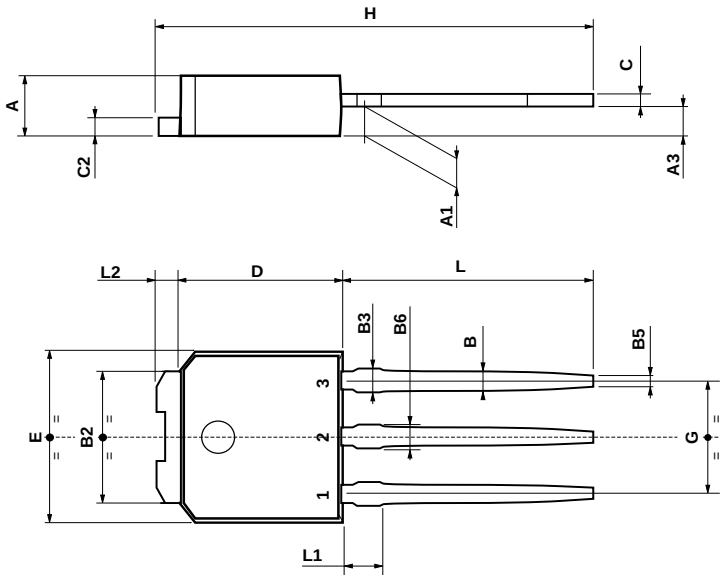

0068771-E

DPAK FOOTPRINT

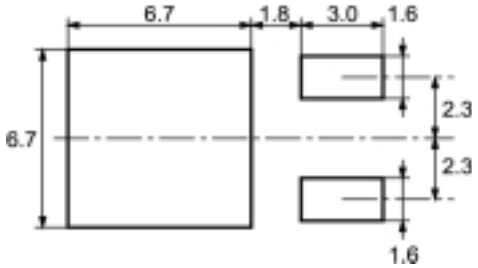

All dimensions are in millimeters

TUBE SHIPMENT (no suffix)*

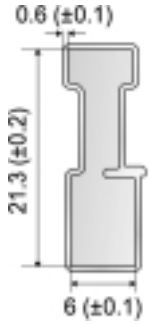

BASE QTY
75

BULK QTY
3000

Tube length 532 (±0.5)

All dimensions are in millimeters

TAPE AND REEL SHIPMENT (suffix "T4")*

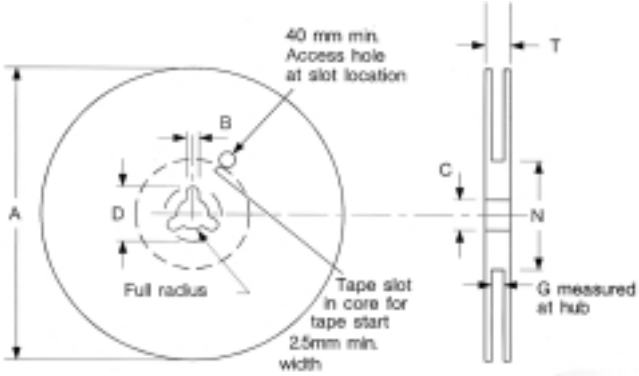

REEL MECHANICAL DATA

DIM.	mm		inch	
	MIN.	MAX.	MIN.	MAX.
A		330		12.992
B	1.5		0.059	
C	12.8	13.2	0.504	0.520
D	20.2		0.795	
G	16.4	18.4	0.645	0.724
N	50		1.968	
T		22.4		0.881

BASE QTY	BULK QTY
2500	2500

TAPE MECHANICAL DATA

DIM.	mm		inch	
	MIN.	MAX.	MIN.	MAX.
A0	6.8	7	0.267	0.275
B0	10.4	10.6	0.409	0.417
B1		12.1		0.476
D	1.5	1.6	0.059	0.063
D1	1.5		0.059	
E	1.65	1.85	0.065	0.073
F	7.4	7.6	0.291	0.299
K0	2.55	2.75	0.100	0.108
P0	3.9	4.1	0.153	0.161
P1	7.9	8.1	0.311	0.319
P2	1.9	2.1	0.075	0.082
R	40		1.574	
W	15.7	16.3	0.618	0.641

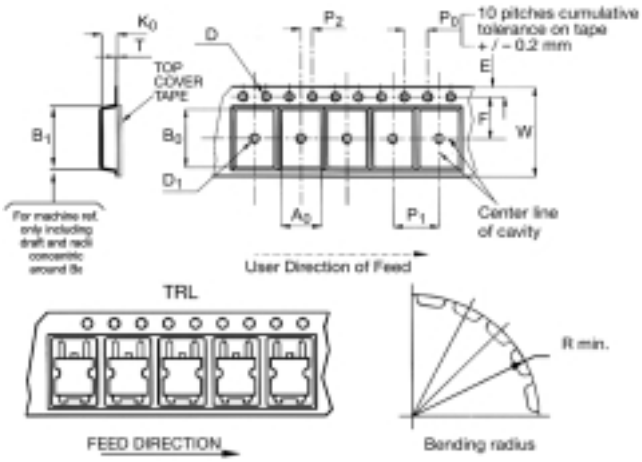

* on sales type

Table 11: Revision History

Date	Revision	Description of Changes
06-Oct-2003	1	First release
18-Jan-2005	2	Final datasheet

Information furnished is believed to be accurate and reliable. However, STMicroelectronics assumes no responsibility for the consequences of use of such information nor for any infringement of patents or other rights of third parties which may result from its use. No license is granted by implication or otherwise under any patent or patent rights of STMicroelectronics. Specifications mentioned in this publication are subject to change without notice. This publication supersedes and replaces all information previously supplied. STMicroelectronics products are not authorized for use as critical components in life support devices or systems without express written approval of STMicroelectronics.

The ST logo is a registered trademark of STMicroelectronics

All other names are the property of their respective owners

© 2005 STMicroelectronics - All Rights Reserved

STMicroelectronics group of companies

Australia - Belgium - Brazil - Canada - China - Czech Republic - Finland - France - Germany - Hong Kong - India - Israel - Italy - Japan - Malaysia - Malta - Morocco - Singapore - Spain - Sweden - Switzerland - United Kingdom - United States of America