查询STH8NA80供应商 捷多邦，专业PCB打样工厂，24小时加急出货

STW8NA80
STH8NA80FI

N - CHANNEL ENHANCEMENT MODE POWER MOS TRANSISTORS

PRELIMINARY DATA

TYPE	V_{DSS}	$R_{DS(on)}$	I_D
STW8NA80	800 V	< 1.50 Ω	7.2 A
STH8NA80FI	800 V	< 1.50 Ω	4.5 A

- TYPICAL $R_{DS(on)}$ = 1.3 Ω
- ± 30V GATE TO SOURCE VOLTAGE RATING
- 100% AVALANCHE TESTED
- REPETITIVE AVALANCHE DATA AT 100°C
- LOW INTRINSIC CAPACITANCES
- GATE GHARGE MINIMIZED
- REDUCED THRESHOLD VOLTAGE SPREAD

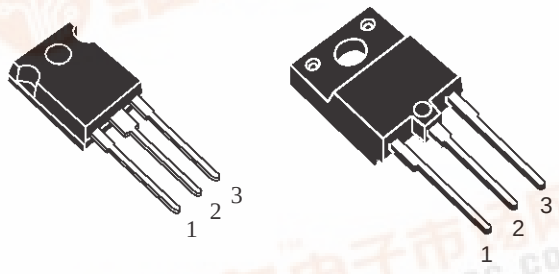

TO-247 ISOWATT218

DESCRIPTION

This series of POWER MOSFETS represents the most advanced high voltage technology. The optimized cell layout coupled with a new proprietary edge termination concur to give the device low RDS(on) and gate charge, unequalled ruggedness and superior switching performance.

APPLICATIONS

- HIGH CURRENT, HIGH SPEED SWITCHING
- SWITCH MODE POWER SUPPLIES (SMPS)
- DC-AC CONVERTERS FOR WELDING EQUIPMENT AND UNINTERRUPTIBLE POWER SUPPLIES AND MOTOR DRIVE

INTERNAL SCHEMATIC DIAGRAM

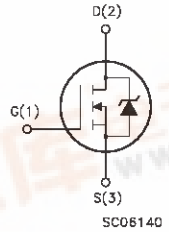

ABSOLUTE MAXIMUM RATINGS

Symbol	Parameter	Value		Unit
		STW8NA80	STH8NA80FI	
V_{DS}	Drain-source Voltage (V_{GS} = 0)	800		V
V_{DGR}	Drain- gate Voltage (R_{GS} = 20 kΩ)	800		V
V_{GS}	Gate-source Voltage	± 30		V
I_D	Drain Current (continuous) at T_c = 25 °C	7.2	4.5	A
I_D	Drain Current (continuous) at T_c = 100 °C	4.5	2.8	A
I_{DM}(•)	Drain Current (pulsed)	28.8	28.8	A
P_{tot}	Total Dissipation at T_c = 25 °C	175	70	W
	Derating Factor	1.4	0.56	W/°C
V_{ISO}	Insulation Withstand Voltage (DC)	—	4000	V
T_{stg}	Storage Temperature	-65 to 150		°C
T_j	Max. Operating Junction Temperature	150		°C

(•) Pulse width limited by safe operating area

找PDF 维库一下 pdf.dzsc.com

THERMAL DATA

		TO-247	ISOWATT218	
$R_{thj-case}$	Thermal Resistance Junction-case Max	0.71	1.78	$^oC/W$
$R_{thj-amb}$ $R_{thc-sink}$ T_l	Thermal Resistance Junction-ambient Max Thermal Resistance Case-sink Typ Maximum Lead Temperature For Soldering Purpose	30 0.1 300		$^oC/W$ $^oC/W$ ^oC

AVALANCHE CHARACTERISTICS

Symbol	Parameter	Max Value	Unit
I_{AR}	Avalanche Current, Repetitive or Not-Repetitive (pulse width limited by T_j max, $\delta < 1\%$)	7.2	A
E_{AS}	Single Pulse Avalanche Energy (starting $T_j = 25\ ^oC$, $I_D = I_{AR}$, $V_{DD} = 50$ V)	700	mJ

ELECTRICAL CHARACTERISTICS ($T_{case} = 25\ ^oC$ unless otherwise specified)

OFF

Symbol	Parameter	Test Conditions	Min.	Typ.	Max.	Unit
$V_{(BR)DSS}$	Drain-source Breakdown Voltage	$I_D = 250\ \mu A$ $V_{GS} = 0$	800			V
I_{DSS}	Zero Gate Voltage Drain Current ($V_{GS} = 0$)	V_{DS} = Max Rating V_{DS} = Max Rating $T_c = 100\ ^oC$			50 500	µA µA
I_{GSS}	Gate-body Leakage Current ($V_{DS} = 0$)	$V_{GS} = \pm 30$ V			100	nA

ON (*)

Symbol	Parameter	Test Conditions	Min.	Typ.	Max.	Unit
$V_{GS(th)}$	Gate Threshold Voltage	$V_{DS} = V_{GS}$ $I_D = 250\ \mu A$	2.25	3	3.75	V
$R_{DS(on)}$	Static Drain-source On Resistance	$V_{GS} = 10V$ $I_D = 4A$		1.3	1.5	Ω
$I_{D(on)}$	On State Drain Current	$V_{DS} > I_{D(on)} \times R_{DS(on)max}$ $V_{GS} = 10$ V	7.2			A

DYNAMIC

Symbol	Parameter	Test Conditions	Min.	Typ.	Max.	Unit
g_{fs} (*)	Forward Transconductance	$V_{DS} > I_{D(on)} \times R_{DS(on)max}$ $I_D = 4$ A	4.5	7.9		S
C_{iss} C_{oss} C_{rss}	Input Capacitance Output Capacitance Reverse Transfer Capacitance	$V_{DS} = 25$ V f = 1 MHz $V_{GS} = 0$		1750 188 50	2300 245 70	pF pF pF

ELECTRICAL CHARACTERISTICS (continued)

SWITCHING ON

Symbol	Parameter	Test Conditions	Min.	Typ.	Max.	Unit
$t_{d(on)}$ t_r	Turn-on Time Rise Time	V_{DD} = 400 V I_D = 4 A R_G = 4.7 Ω V_{GS} = 10 V		20 28	28 38	ns ns
$(di/dt)_{on}$	Turn-on Current Slope	V_{DD} = 640 V I_D = 8 A R_G = 47 Ω V_{GS} = 10 V		170		A/µs
Q_g Q_{gs} Q_{gd}	Total Gate Charge Gate-Source Charge Gate-Drain Charge	V_{DD} = 400 V I_D = 8 A V_{GS} = 10 V		75 10 35	100	nC nC nC

SWITCHING OFF

Symbol	Parameter	Test Conditions	Min.	Typ.	Max.	Unit
$t_{r(Voff)}$ t_f t_c	Off-voltage Rise Time Fall Time Cross-over Time	V_{DD} = 640 V I_D = 8 A R_G = 4.7 Ω V_{GS} = 10 V		18 20 25	25 28 35	ns ns ns

SOURCE DRAIN DIODE

Symbol	Parameter	Test Conditions	Min.	Typ.	Max.	Unit
I_{SD} I_{SDM} (•)	Source-drain Current Source-drain Current (pulsed)				7.2 28.8	A A
V_{SD} (*)	Forward On Voltage	I_{SD} = 7.2 A V_{GS} = 0			1.6	V
t_{rr} Q_{rr} I_{RRM}	Reverse Recovery Time Reverse Recovery Charge Reverse Recovery Current	I_{SD} = 7.5 A di/dt = 100 A/µs V_{DD} = 100 V T_j = 150 °C		850 17 40		ns µC A

(*) Pulsed: Pulse duration = 300 µs, duty cycle 1.5 %
(•) Pulse width limited by safe operating area

TO-247 MECHANICAL DATA

DIM.	mm			inch		
	MIN.	TYP.	MAX.	MIN.	TYP.	MAX.
A	4.7		5.3	0.185		0.209
D	2.2		2.6	0.087		0.102
E	0.4		0.8	0.016		0.031
F	1		1.4	0.039		0.055
F3	2		2.4	0.079		0.094
F4	3		3.4	0.118		0.134
G		10.9			0.429	
H	15.3		15.9	0.602		0.626
L	19.7		20.3	0.776		0.779
L3	14.2		14.8	0.559	0.413	0.582
L4		34.6			1.362	
L5		5.5			0.217	
M	2		3	0.079		0.118
Dia	3.55		3.65	0.140		0.144

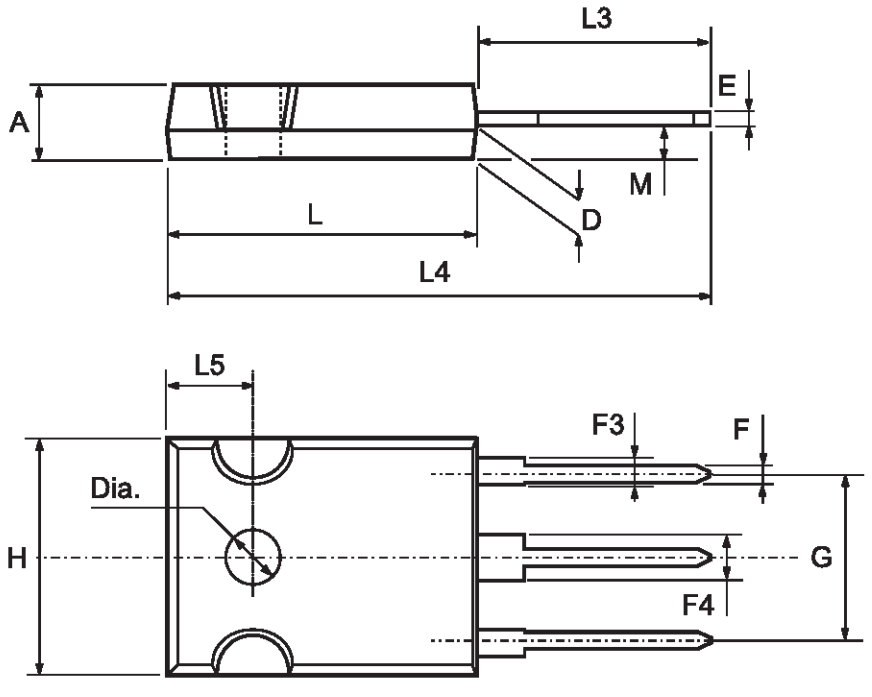

P025P

ISOWATT218 MECHANICAL DATA

DIM.	mm			inch		
	MIN.	TYP.	MAX.	MIN.	TYP.	MAX.
A	5.35		5.65	0.210		0.222
C	3.3		3.8	0.130		0.149
D	2.9		3.1	0.114		0.122
D1	1.88		2.08	0.074		0.081
E	0.75		1	0.029		0.039
F	1.05		1.25	0.041		0.049
G	10.8		11.2	0.425		0.441
H	15.8		16.2	0.622		0.637
L1	20.8		21.2	0.818		0.834
L2	19.1		19.9	0.752		0.783
L3	22.8		23.6	0.897		0.929
L4	40.5		42.5	1.594		1.673
L5	4.85		5.25	0.190		0.206
L6	20.25		20.75	0.797		0.817
M	3.5		3.7	0.137		0.145
N	2.1		2.3	0.082		0.090
U		4.6			0.181	

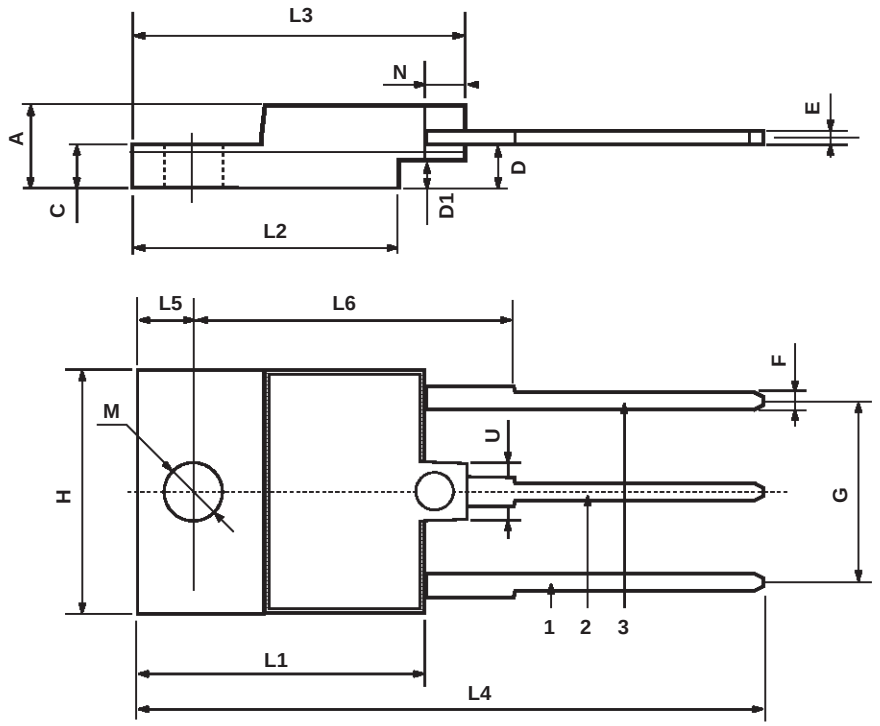

P025C

Information furnished is believed to be accurate and reliable. However, STMicroelectronics assumes no responsibility for the consequences of use of such information nor for any infringement of patents or other rights of third parties which may result from its use. No license is granted by implication or otherwise under any patent or patent rights of STMicroelectronics. Specification mentioned in this publication are subject to change without notice. This publication supersedes and replaces all information previously supplied. STMicroelectronics products are not authorized for use as critical components in life support devices or systems without express written approval of STMicroelectronics.

The ST logo is a trademark of STMicroelectronics

© 1998 STMicroelectronics – Printed in Italy – All Rights Reserved

STMicroelectronics GROUP OF COMPANIES

Australia - Brazil - Canada - China - France - Germany - Italy - Japan - Korea - Malaysia - Malta - Mexico - Morocco - The Netherlands - Singapore - Spain - Sweden - Switzerland - Taiwan - Thailand - United Kingdom - U.S.A.

http://www.st.com