STB14NF10
STP14NF10 STP14NF10FP

N-CHANNEL 100V - 0.115 Ω - 15A TO-220/TO-220FP/D²PAK
LOW GATE CHARGE STripFET™ II POWER MOSFET

TYPE	V_{DSS}	$R_{DS(on)}$	I_D
STB14NF10	100 V	<0.13 Ω	15 A
STP14NF10	100 V	<0.13 Ω	15 A
STP14NF10FP	100 V	<0.13 Ω	10 A

- TYPICAL R_{DS}(on) = 0.115 Ω
- EXCEPTIONAL dv/dt CAPABILITY
- 100% AVALANCHE TESTED
- APPLICATION ORIENTED CHARACTERIZATION
- SURFACE-MOUNTING D²PAK (TO-263) POWER PACKAGE IN TUBE (NO SUFFIX) OR IN TAPE & REEL (SUFFIX "T4")

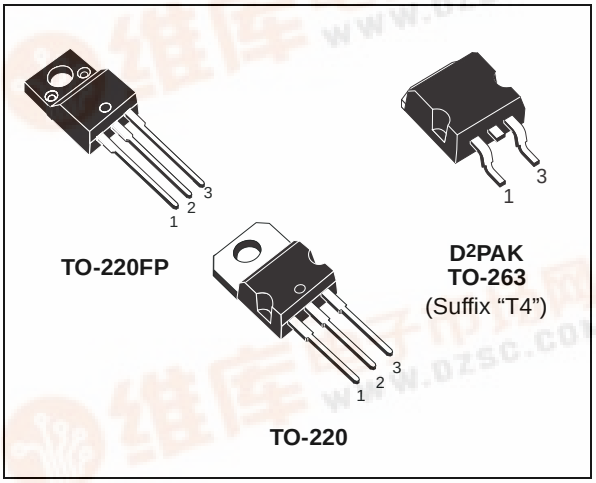

DESCRIPTION

This MOSFET series realized with STMicroelectronics unique STripFET™ process has specifically been designed to minimize input capacitance and gate charge. It is therefore suitable as primary switch in advanced high-efficiency, high-frequency isolated DC-DC converters for Telecom and Computer applications. It is also intended for any applications with low gate drive requirements.

APPLICATIONS

- HIGH-EFFICIENCY DC-DC CONVERTERS
- UPS AND MOTOR CONTROL

INTERNAL SCHEMATIC DIAGRAM

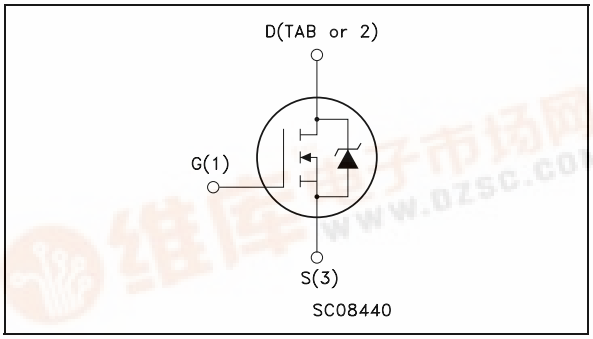

ABSOLUTE MAXIMUM RATINGS

Symbol	Parameter	Value		Unit
		STB14NF10 STP14NF10	STP14NF10FP	
V_{DS}	Drain-source Voltage (V_{GS} = 0)	100		V
V_{DGR}	Drain-gate Voltage (R_{GS} = 20 kΩ)	100		V
V_{GS}	Gate- source Voltage	± 20		V
I_D	Drain Current (continuous) at T_C = 25°C	15	10	A
I_D	Drain Current (continuous) at T_C = 100°C	10	6.3	A
I_{DM}(•)	Drain Current (pulsed)	60	40	A
P_{tot}	Total Dissipation at T_C = 25°C	60	25	W
	Derating Factor	0.4	0.17	W/°C
dv/dt (1)	Peak Diode Recovery voltage slope	9		V/ns
E_{AS} (2)	Single Pulse Avalanche Energy	70		mJ
V_{ISO}	Insulation Withstand Voltage (DC)	------	2000	V
T_{stg}	Storage Temperature	-55 to 175		°C
T_j	Operating Junction Temperature			

(•) Pulse width limited by safe operating area.

(1) I_{SD} ≤14A, di/dt ≤300A/µs, V_{DD} ≤ $V_{(BR)DSS}$, T_j ≤ T_{JMAX}
(2) Starting T_j = 25 °C, I_D = 15A, V_{DD}= 50V

THERMAL DATA

			D²PAK TO-220	TO-220FP	
Rthj-case	Thermal Resistance Junction-case	Max	2.5	6	°C/W
Rthj-amb T_l	Thermal Resistance Junction-ambient Maximum Lead Temperature For Soldering Purpose	Max	62.5 300		°C/W °C

ELECTRICAL CHARACTERISTICS (T_{case} = 25 °C unless otherwise specified)

OFF

Symbol	Parameter	Test Conditions	Min.	Typ.	Max.	Unit
$V_{(BR)DSS}$	Drain-source Breakdown Voltage	I_D = 250 µA, V_{GS} = 0	100			V
I_{DSS}	Zero Gate Voltage Drain Current (V_{GS} = 0)	V_{DS} = Max Rating V_{DS} = Max Rating T_C = 125°C			1 10	µA µA
I_{GSS}	Gate-body Leakage Current (V_{DS} = 0)	V_{GS} = ± 20 V			±100	nA

ON (*)

Symbol	Parameter	Test Conditions	Min.	Typ.	Max.	Unit
$V_{GS(th)}$	Gate Threshold Voltage	V_{DS} = V_{GS} I_D = 250 µA	2	3	4	V
$R_{DS(on)}$	Static Drain-source On Resistance	V_{GS} = 10 V I_D = 7 A		0.115	0.13	Ω

DYNAMIC

Symbol	Parameter	Test Conditions	Min.	Typ.	Max.	Unit
g_{fs} (*)	Forward Transconductance	V_{DS} = 15 V I_D = 7 A		20		S
C_{iss} C_{oss} C_{rss}	Input Capacitance Output Capacitance Reverse Transfer Capacitance	V_{DS} = 25V, f = 1 MHz, V_{GS} = 0		460 70 30		pF pF pF

ELECTRICAL CHARACTERISTICS (continued)

SWITCHING ON

Symbol	Parameter	Test Conditions	Min.	Typ.	Max.	Unit
$t_{d(on)}$ t_r	Turn-on Delay Time Rise Time	V_{DD} = 50 V I_D = 7 A R_G = 4.7 Ω V_{GS} = 10 V (Resistive Load, Figure 3)		16 25		ns ns
Q_g Q_{gs} Q_{gd}	Total Gate Charge Gate-Source Charge Gate-Drain Charge	V_{DD}= 80 V I_D= 12 A V_{GS}= 10V		15.5 3.7 4.7	21	nC nC nC

SWITCHING OFF

Symbol	Parameter	Test Conditions	Min.	Typ.	Max.	Unit
$t_{d(off)}$ t_f	Turn-off Delay Time Fall Time	V_{DD} = 50 V I_D = 7 A R_G = 4.7Ω, V_{GS} = 10 V (Resistive Load, Figure 3)		32 8		ns ns

SOURCE DRAIN DIODE

Symbol	Parameter	Test Conditions	Min.	Typ.	Max.	Unit
I_{SD} I_{SDM} (•)	Source-drain Current Source-drain Current (pulsed)				15 60	A A
V_{SD} (*)	Forward On Voltage	I_{SD} = 14 A V_{GS} = 0			1.5	V
t_{rr} Q_{rr} I_{RRM}	Reverse Recovery Time Reverse Recovery Charge Reverse Recovery Current	I_{SD} = 14 A di/dt = 100A/µs V_{DD} = 50 V T_j = 150°C (see test circuit, Figure 5)		90 230 5		ns nC A

(*)Pulsed: Pulse duration = 300 µs, duty cycle 1.5 %.
(•)Pulse width limited by safe operating area.

Safe Operating Area for TO-220

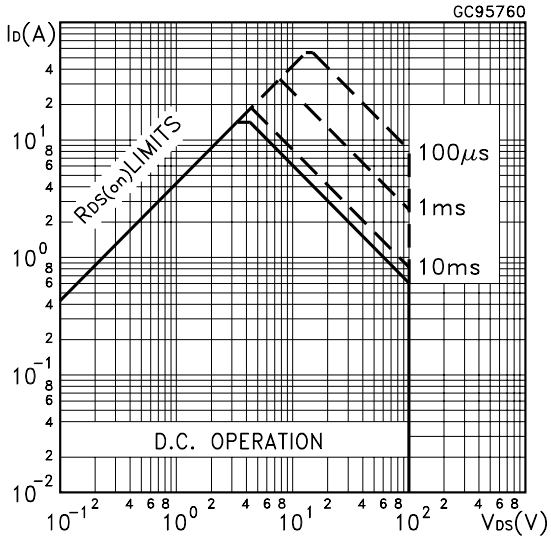

Safe Operating Area for TO-220FP

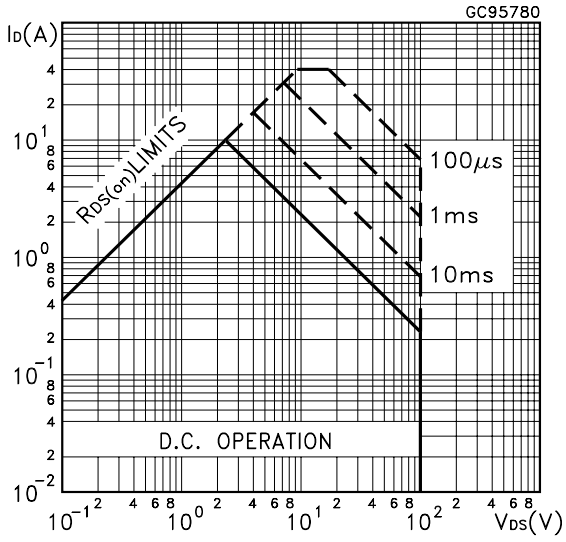

Thermal Impedance

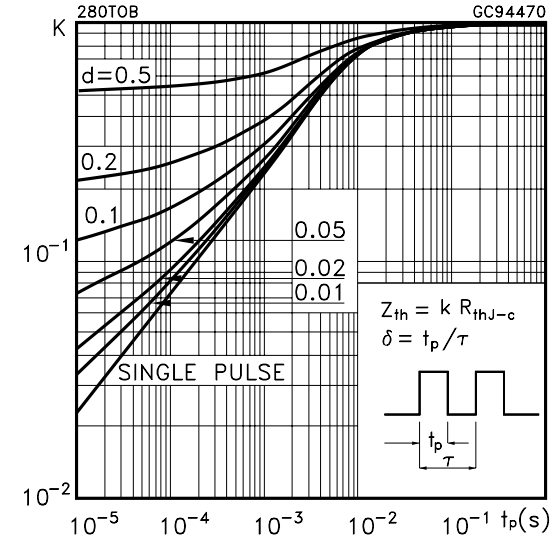

Thermal Impedance for TO-220FP

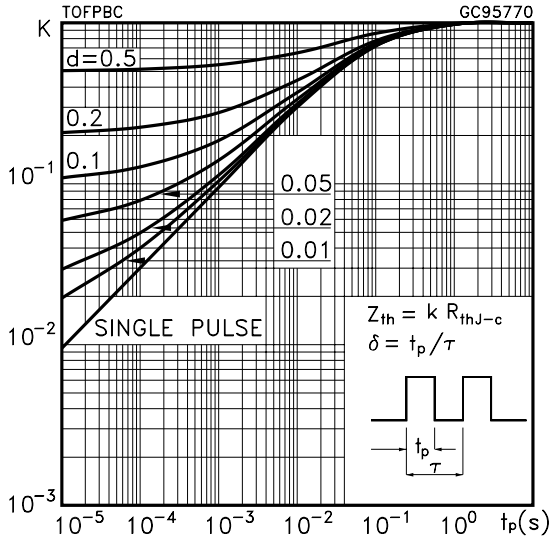

Output Characteristics

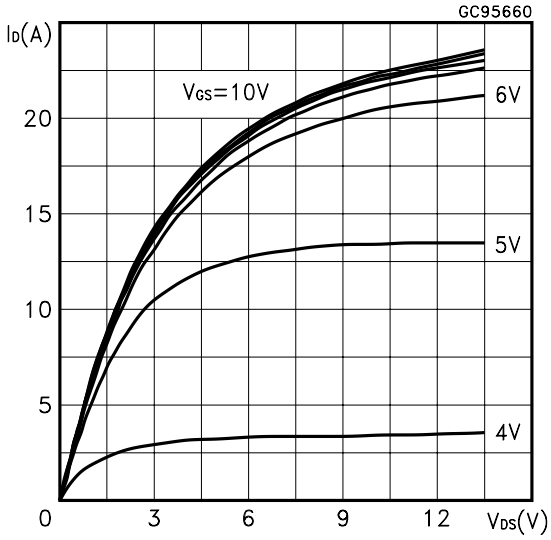

Transfer Characteristics

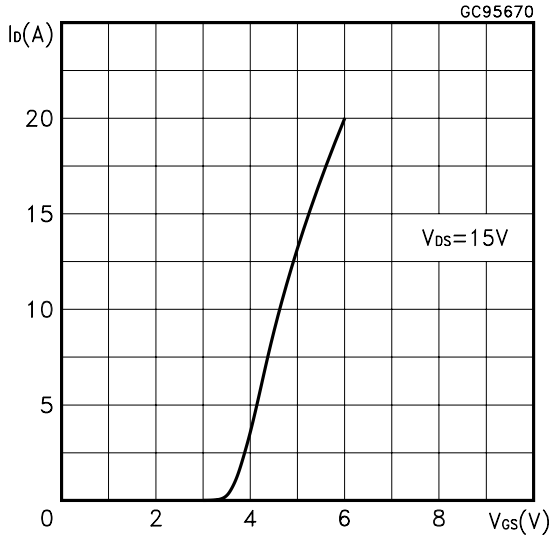

Transconductance

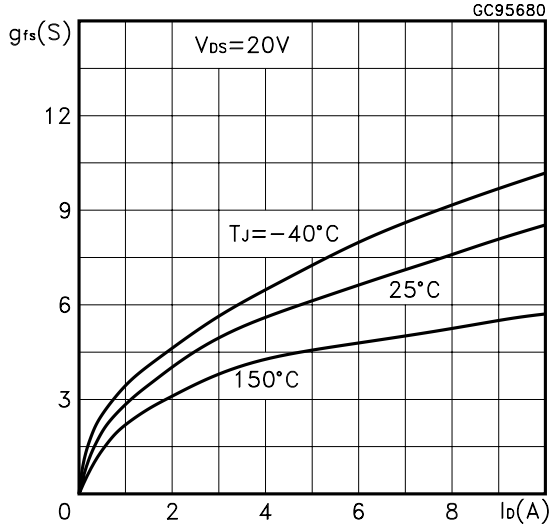

Static Drain-source On Resistance

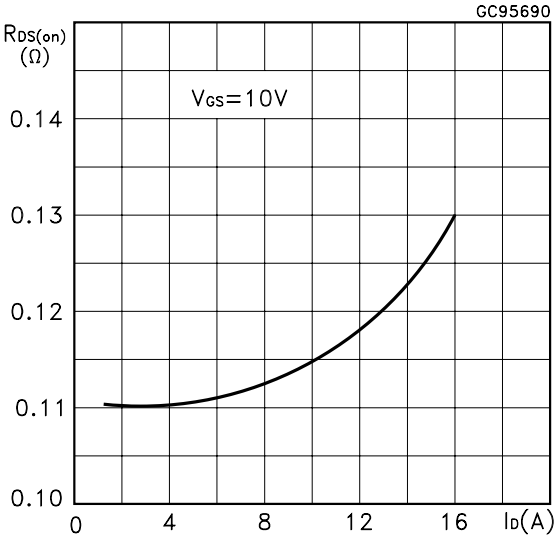

Gate Charge vs Gate-source Voltage

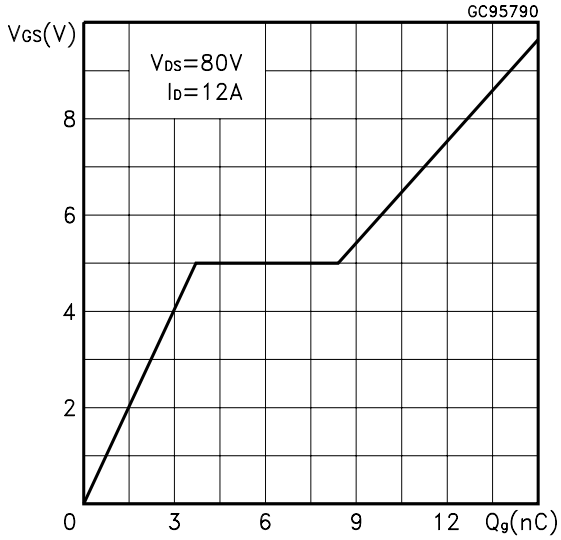

Capacitance Variations

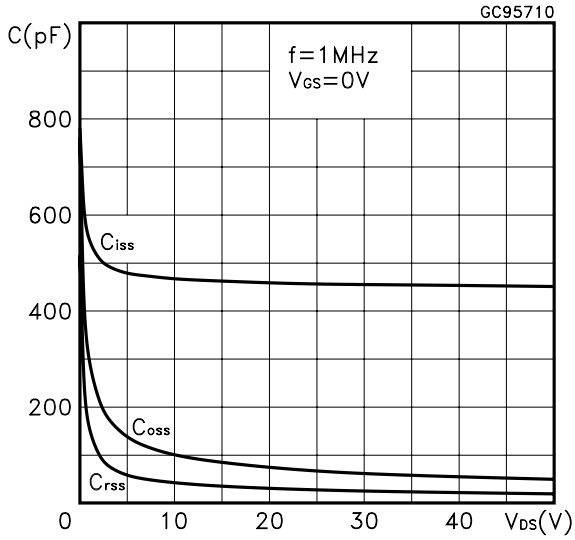

Normalized Gate Threshold Voltage vs Temperature

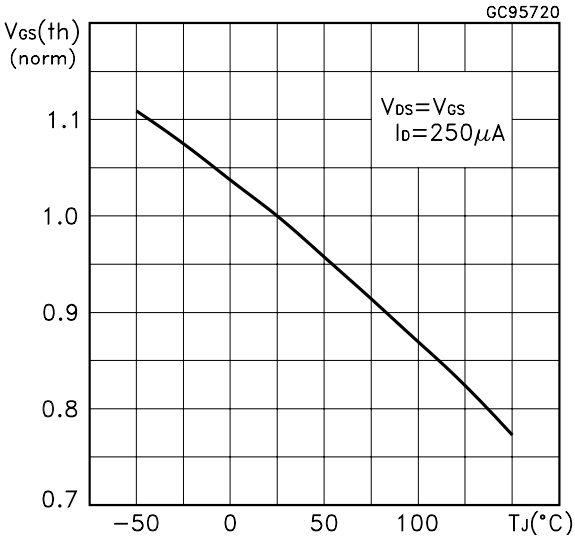

Normalized on Resistance vs Temperature

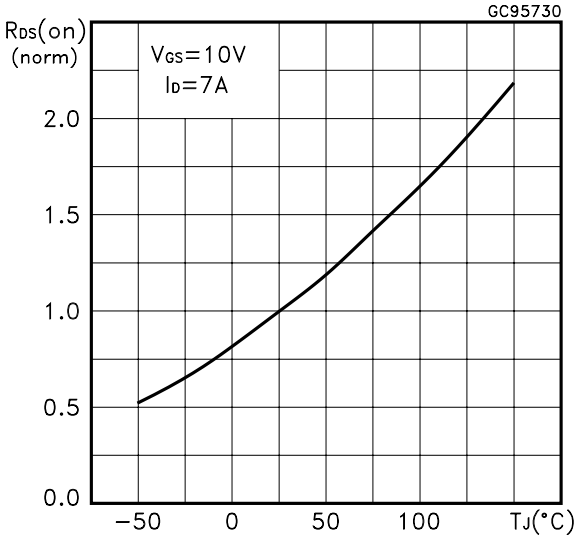

Source-drain Diode Forward Characteristics

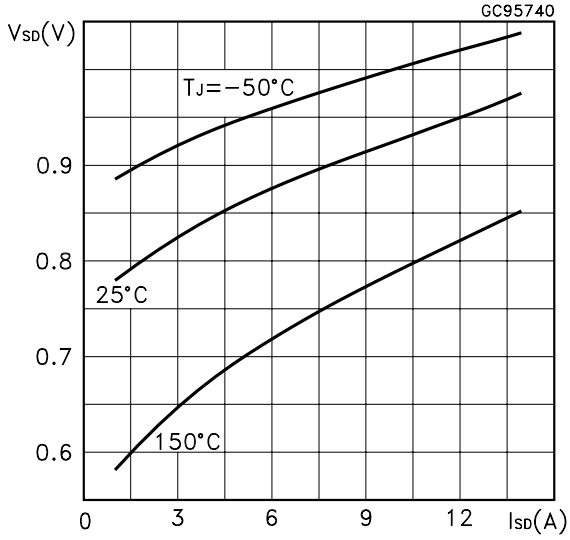

Normalized Breakdown Voltage Temperature

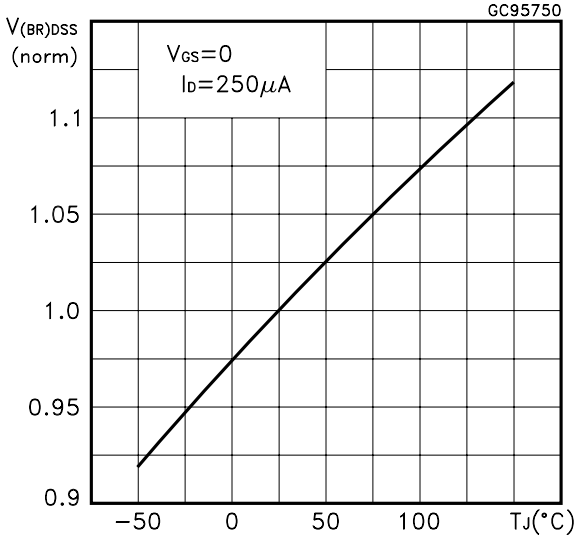

Fig. 1: Unclamped Inductive Load Test Circuit

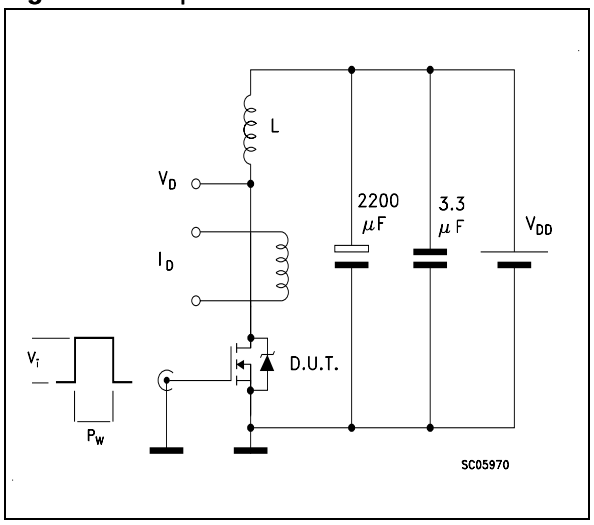

Fig. 2: Unclamped Inductive Waveform

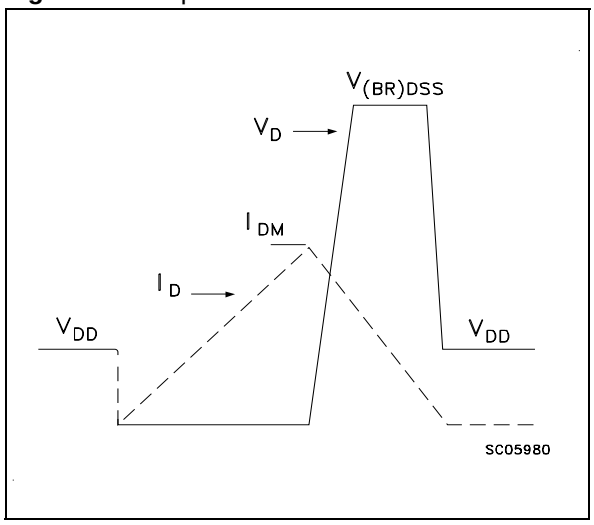

Fig. 3: Switching Times Test Circuits For Resistive Load

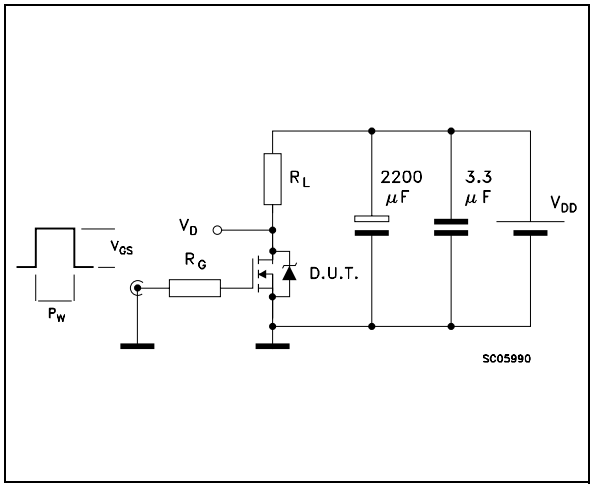

Fig. 4: Gate Charge test Circuit

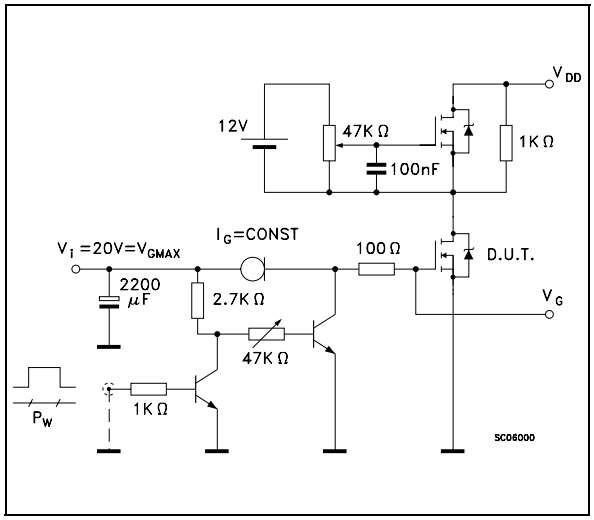

Fig. 5: Test Circuit For Inductive Load Switching And Diode Recovery Times

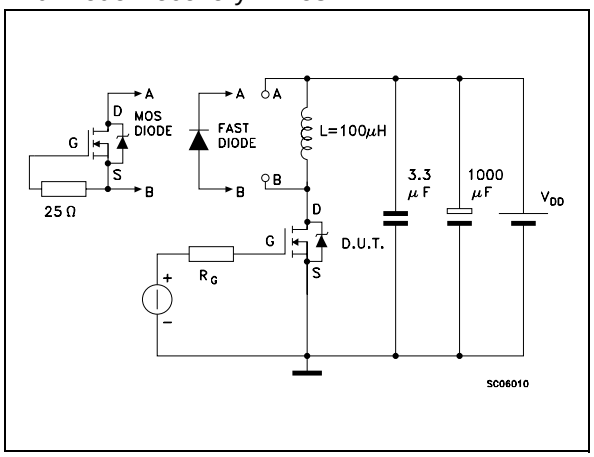

D²PAK MECHANICAL DATA

DIM.	mm.			inch.		
	MIN.	TYP.	MAX.	MIN.	TYP.	TYP.
A	4.4		4.6	0.173		0.181
A1	2.49		2.69	0.098		0.106
A2	0.03		0.23	0.001		0.009
B	0.7		0.93	0.028		0.037
B2	1.14		1.7	0.045		0.067
C	0.45		0.6	0.018		0.024
C2	1.21		1.36	0.048		0.054
D	8.95		9.35	0.352		0.368
D1		8			0.315	
E	10		10.4	0.394		0.409
E1	8.5				0.334	
G	4.88		5.28	0.192		0.208
L	15		15.85	0.591		0.624
L2	1.27		1.4	0.050		0.055
L3	1.4		1.75	0.055		0.069
M	2.4		3.2	0.094		0.126
R		0.4			0.016	
V2	0°		8°	0°		8°

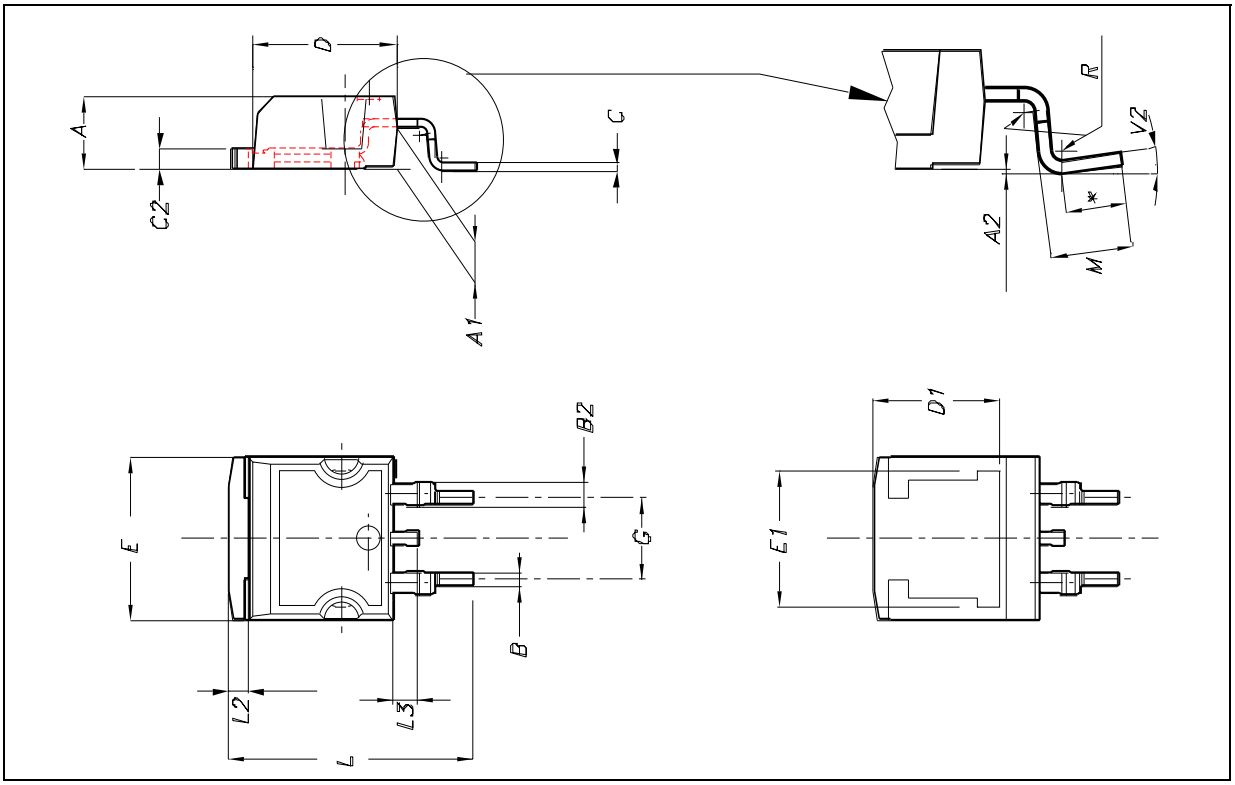

TO-220 MECHANICAL DATA

DIM.	mm			inch		
	MIN.	TYP.	MAX.	MIN.	TYP.	MAX.
A	4.40		4.60	0.173		0.181
C	1.23		1.32	0.048		0.051
D	2.40		2.72	0.094		0.107
D1		1.27			0.050	
E	0.49		0.70	0.019		0.027
F	0.61		0.88	0.024		0.034
F1	1.14		1.70	0.044		0.067
F2	1.14		1.70	0.044		0.067
G	4.95		5.15	0.194		0.203
G1	2.4		2.7	0.094		0.106
H2	10.0		10.40	0.393		0.409
L2		16.4			0.645	
L4	13.0		14.0	0.511		0.551
L5	2.65		2.95	0.104		0.116
L6	15.25		15.75	0.600		0.620
L7	6.2		6.6	0.244		0.260
L9	3.5		3.93	0.137		0.154
DIA.	3.75		3.85	0.147		0.151

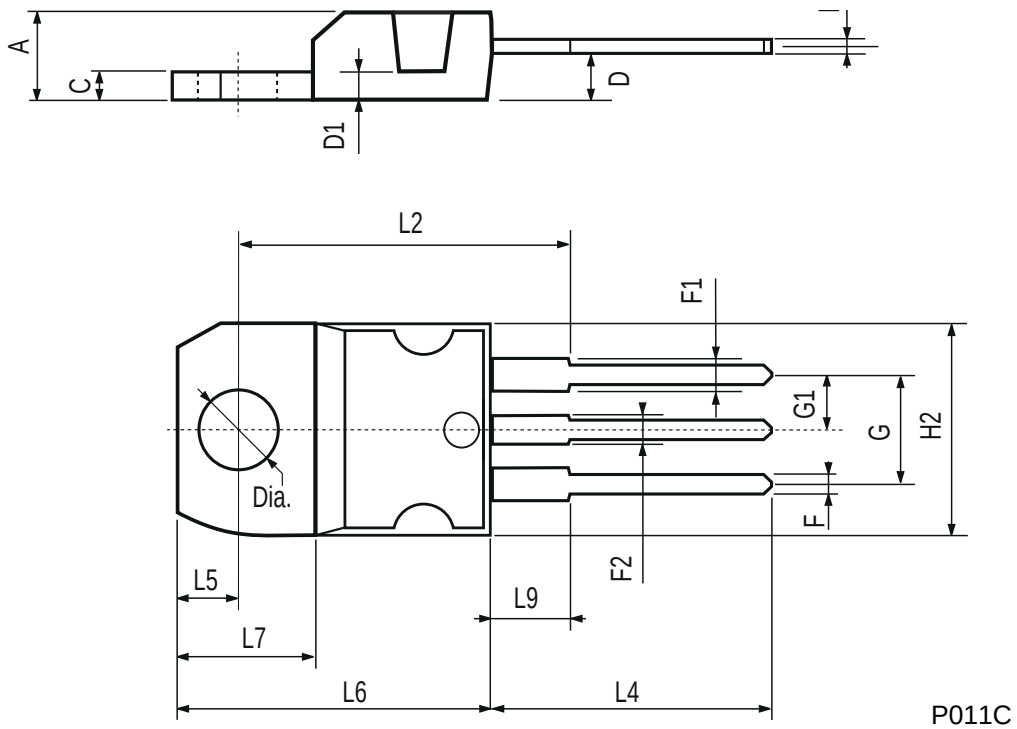

TO-220FP MECHANICAL DATA

DIM.	mm			inch		
	MIN.	TYP.	MAX.	MIN.	TYP.	MAX.
A	4.4		4.6	0.173		0.181
B	2.5		2.7	0.098		0.106
D	2.5		2.75	0.098		0.108
E	0.45		0.7	0.017		0.027
F	0.75		1	0.030		0.039
F1	1.15		1.7	0.045		0.067
F2	1.15		1.7	0.045		0.067
G	4.95		5.2	0.195		0.204
G1	2.4		2.7	0.094		0.106
H	10		10.4	0.393		0.409
L2		16			0.630	
L3	28.6		30.6	1.126		1.204
L4	9.8		10.6	0.385		0.417
L6	15.9		16.4	0.626		0.645
L7	9		9.3	0.354		0.366
Ø	3		3.2	0.118		0.126

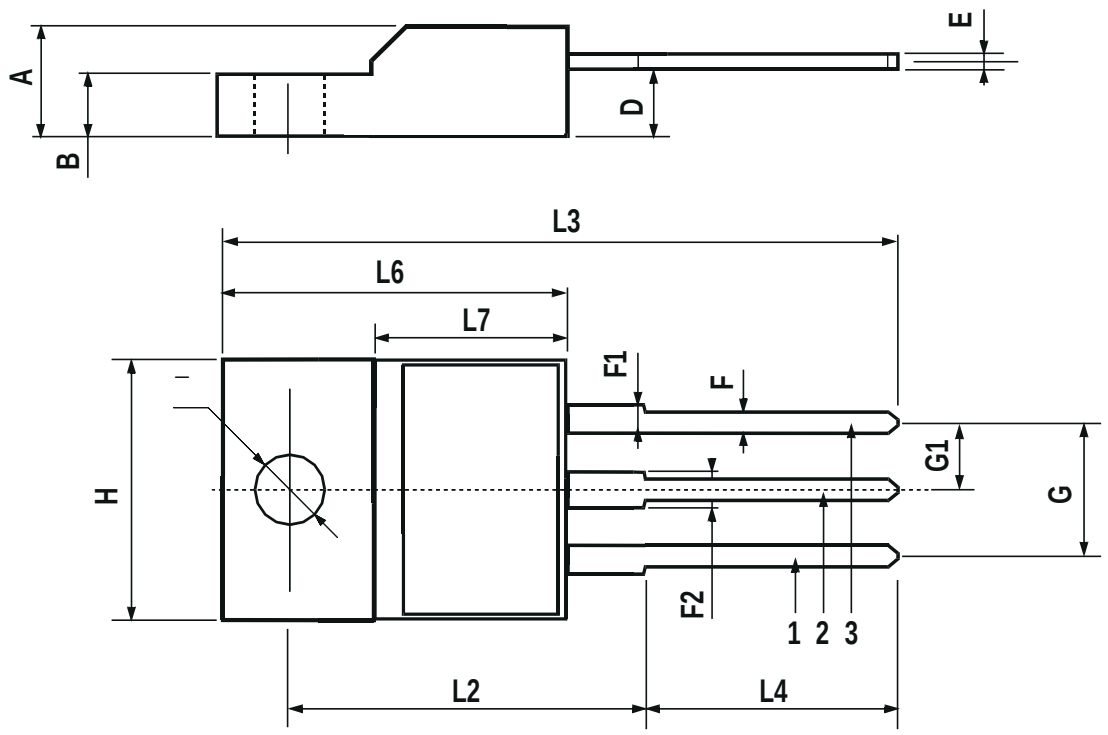

D²PAK FOOTPRINT

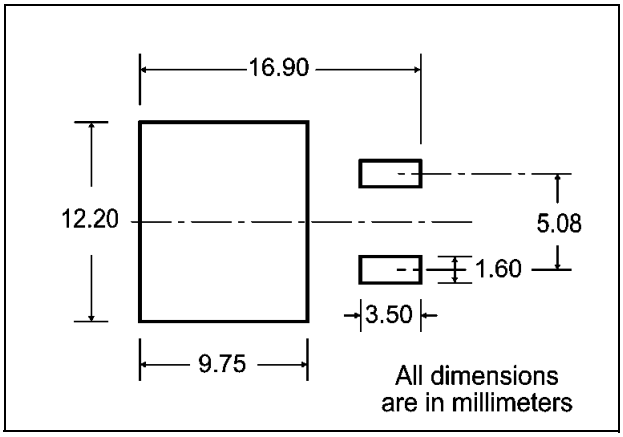

TUBE SHIPMENT (no suffix)*

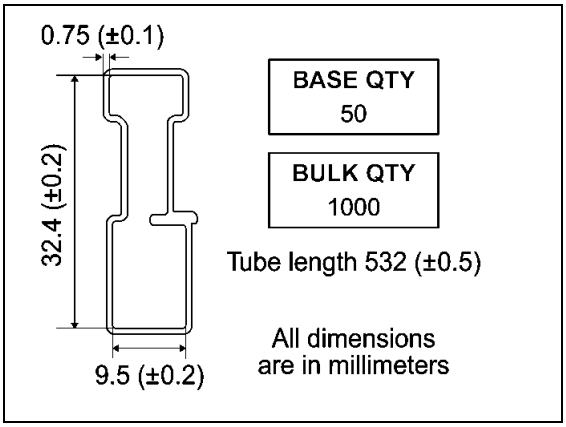

TAPE AND REEL SHIPMENT (suffix "T4")*

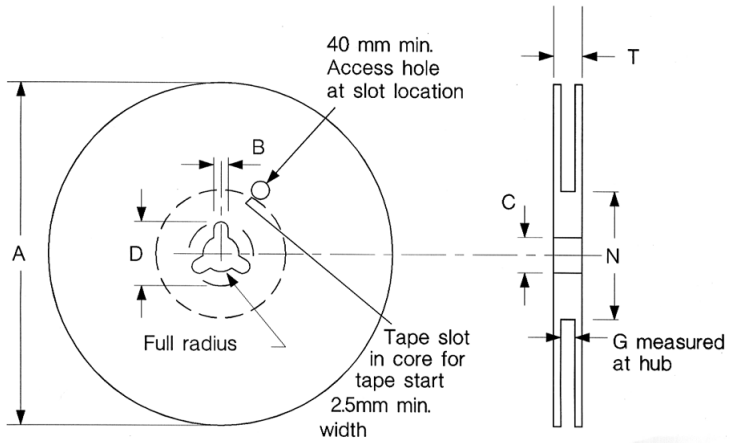

REEL MECHANICAL DATA

DIM.	mm		inch	
	MIN.	MAX.	MIN.	MAX.
A		330		12.992
B	1.5		0.059	
C	12.8	13.2	0.504	0.520
D	20.2		0.795	
G	24.4	26.4	0.960	1.039
N	100		3.937	
T		30.4		1.197

BASE QTY	BULK QTY
1000	1000

TAPE MECHANICAL DATA

DIM.	mm		inch	
	MIN.	MAX.	MIN.	MAX.
A0	10.5	10.7	0.413	0.421
B0	15.7	15.9	0.618	0.626
D	1.5	1.6	0.059	0.063
D1	1.59	1.61	0.062	0.063
E	1.65	1.85	0.065	0.073
F	11.4	11.6	0.449	0.456
K0	4.8	5.0	0.189	0.197
P0	3.9	4.1	0.153	0.161
P1	11.9	12.1	0.468	0.476
P2	1.9	2.1	0075	0.082
R	50		1.574	
T	0.25	0.35	.0.0098	0.0137
W	23.7	24.3	0.933	0.956

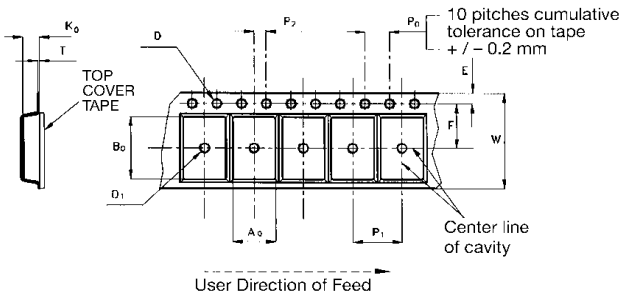

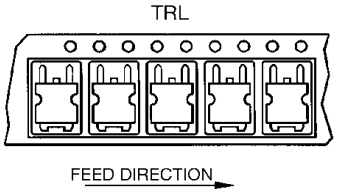

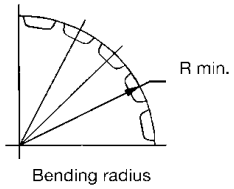

* on sales type