查询SV20供应商 捷多邦，专业PCB打样工厂，24小时加急出货

DYNEX SEMICONDUCTOR

# SV20

## Rectifier Diode

Replaces March 1998 version, DS4085-2.3

DS4085-3.0 January 2000

## APPLICATIONS

- Rectification
- Freewheel Diode
- DC Motor Control
- Power Supplies
- Welding
- Battery Chargers

## KEY PARAMETERS

| | |
|---|---|
| $V_{RRM}$ | 2000V |
| $I_{F(AV)}$ | 220A |
| $I_{FSM}$ | 4000A |

## FEATURES

- High Surge Capability

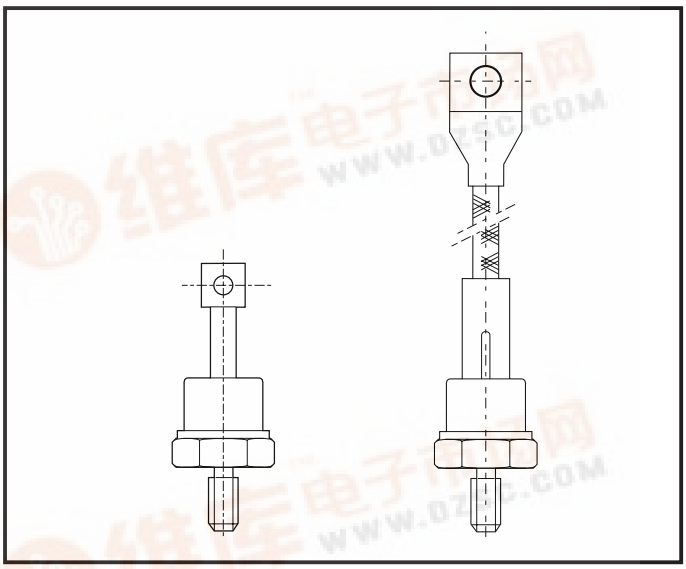

**Outline type codes: DO8C and DO8**
**See Package Details for further information.**

## VOLTAGE RATINGS

| Type Number | Repetitive Peak Reverse Voltage $V_{RRM}$ V | Conditions |
|---|---|---|
| SV20 20 M or K(R) | 2000 | $V_{RSM} = V_{RRM} + 100V$ |
| SV20 14 M or K(R) | 1400 | |
| SV20 10 M or K(R) | 1000 | |
| SV20 06 M or K(R) | 600 | |

Lower voltage grades available.
M for M12 thread. K for 1/2" - 20UNF thread, R for reverse polarity.
Add C to type number for DO8C package.

## CURRENT RATINGS

| Symbol | Parameter | Conditions | Max. | Units |
|---|---|---|---|---|
| **Single Side Cooled** | | | | |
| $I_{F(AV)}$ | Mean forward current | Half wave resistive load, $T_{case}$ = 100°C | 220 | A |
| $I_{F(RMS)}$ | RMS value | $T_{case}$ = 100°C | 350 | A |
| $I_F$ | Continuous (direct) forward current | $T_{case}$ = 100°C | 297 | A |

找PDF 维库一下 pdf.dzsc.com

## SV20

### SURGE RATINGS

| Symbol | Parameter | Conditions | Max. | Units |
|---|---|---|---|---|
| $I_{FSM}$ | Surge (non-repetitive) forward current | 10ms half sine; $T_{case}$ = 175°C | 3.2 | kA |
| $I^2t$ | $I^2t$ for fusing | $V_R$ = 50% $V_{RRM}$ - 1/4 sine | 51.2 x $10^3$ | $A^2s$ |
| $I_{FSM}$ | Surge (non-repetitive) forward current | 10ms half sine; $T_{case}$ =175°C | 4.0 | kA |
| $I^2t$ | $I^2t$ for fusing | $V_R$ = 0 | 80.0 x $10^3$ | $A^2s$ |

### THERMAL AND MECHANICAL DATA

| Symbol | Parameter | Conditions | Min. | Max. | Units |
|---|---|---|---|---|---|
| $R_{th(j-c)}$ | Thermal resistance - junction to case | dc | - | 0.23 | °C/W |
| $R_{th(c-h)}$ | Thermal resistance - case to heatsink | Mounting torque 15.0Nm with mounting compound | - | 0.08 | °C/W |
| $T_{vj}$ | Virtual junction temperature | Forward (conducting) | - | 175 | °C |
| | | Reverse (blocking) | - | 175 | °C |
| $T_{stg}$ | Storage temperature range | | -55 | 200 | °C |
| - | Mounting Torque | | 12.0 | 15.0 | Nm |

### CHARACTERISTICS

| Symbol | Parameter | Conditions | Typ. | Max. | Units |
|---|---|---|---|---|---|
| $V_{FM}$ | Forward voltage | At 600A peak, $T_{case}$ = 25°C | - | 1.4 | V |
| $I_{RRM}$ | Peak reverse current | At $V_{RRM}$, $T_{case}$ = 175°C | - | 20 | mA |
| $Q_S$ | Total stored charge | $I_F$ = 100A, $dI_{RR}/dt$ = 20A/µs, $T_{case}$ = 25°C | 200* | - | µC |
| $I_{RM}$ | Peak recovery current | | 70* | - | A |
| $t_{rr}$ | reverse recovery time | | 5.5* | - | µs |
| $V_{TO}$ | Threshold voltage | At $T_{vj}$ = 175°C | - | 0.8 | V |
| $r_T$ | Slope resistance | At $T_{vj}$ = 175°C | - | 1.0 | mΩ |

**Typical values.*

## CURVES

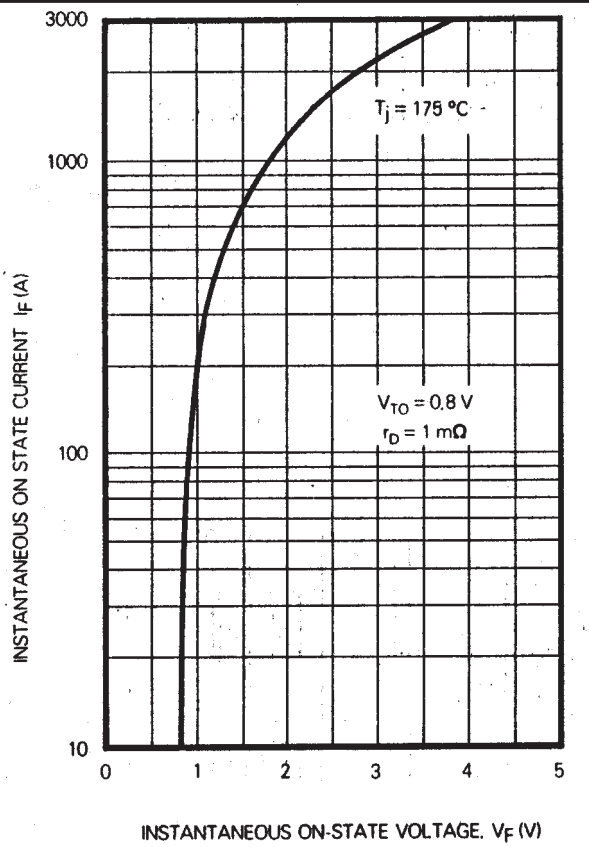


*FIG. 1 MAXIMUM (LIMIT) FORWARD CONDUCTION CHARACTERISTIC*

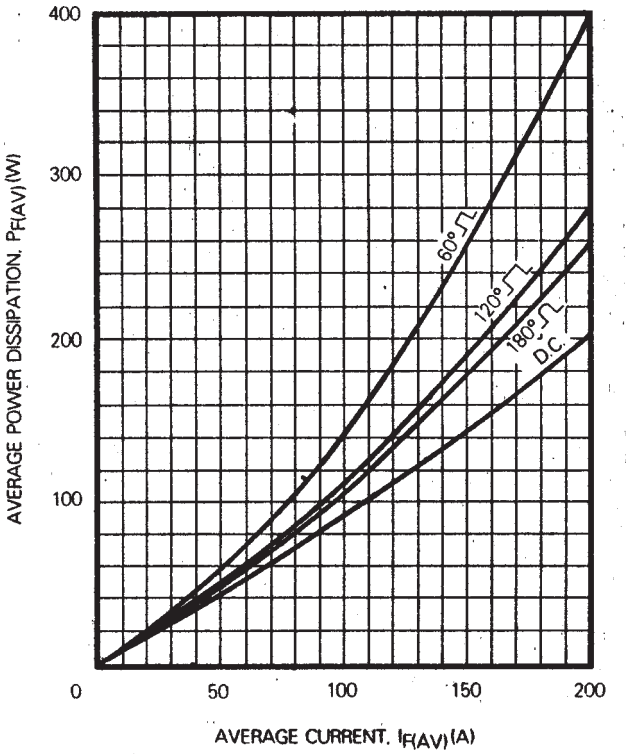


*FIG. 2 MAXIMUM FORWARD POWER DISSIPATION*

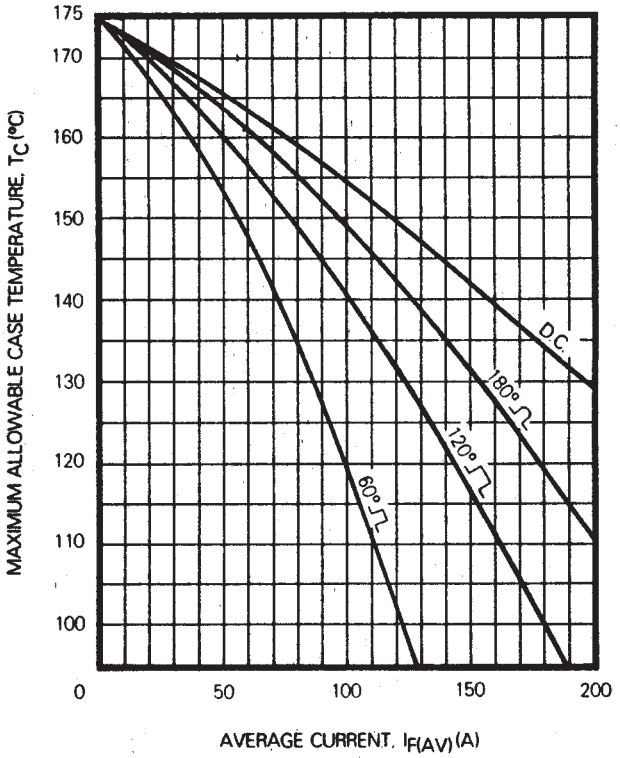


*FIG. 3 MAXIMUM ALLOWABLE CASE TEMPERATURE*

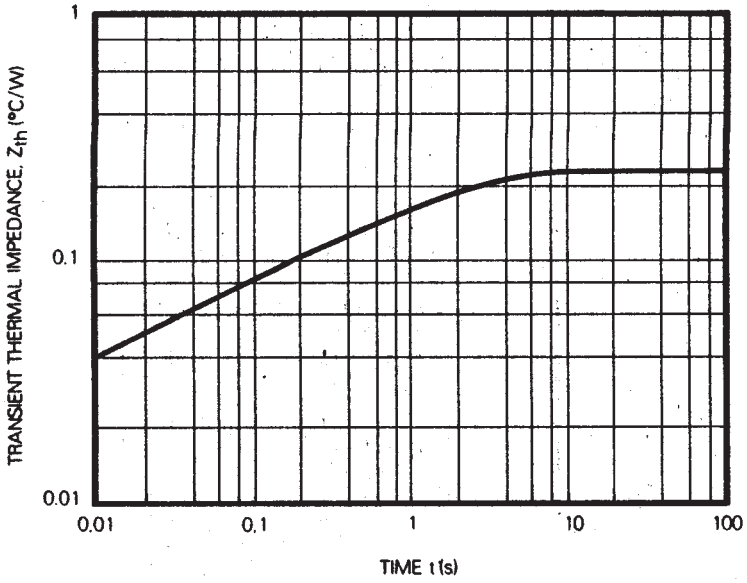


| Conduction angle | Effective thermal Resistance (°C/W) Junction to case | |
|---|---|---|
| | Sinusoidal | Rectangular |
| 180° | 0.248 | 0.276 |
| 120° | 0.258 | 0.311 |
| 60° | 0.299 | 0.391 |

*FIG. 4 TRANSIENT THERMAL IMPEDANCE - JUNCTION TO CASE*

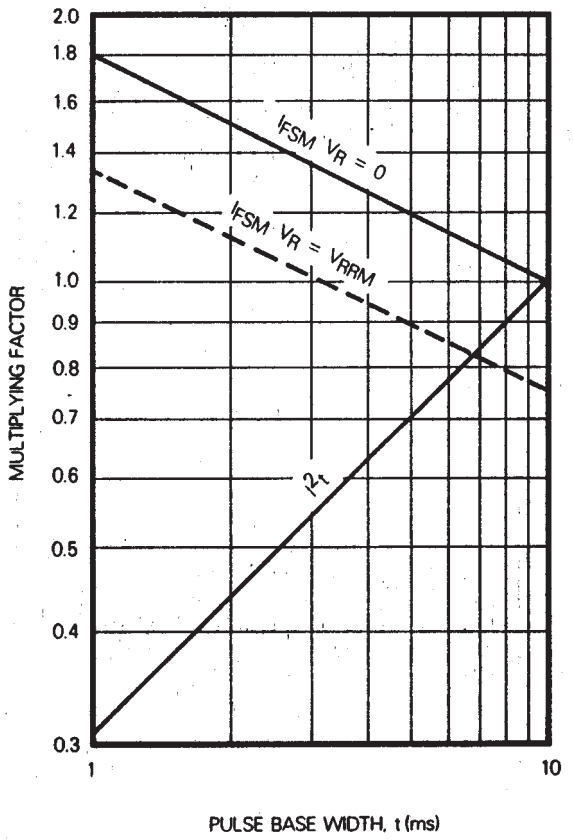


*FIG. 5 MULTIPLYING FACTOR FOR NON-REPETITIVE SUB-CYCLE FORWARD CURRENT AND I2t RATING*

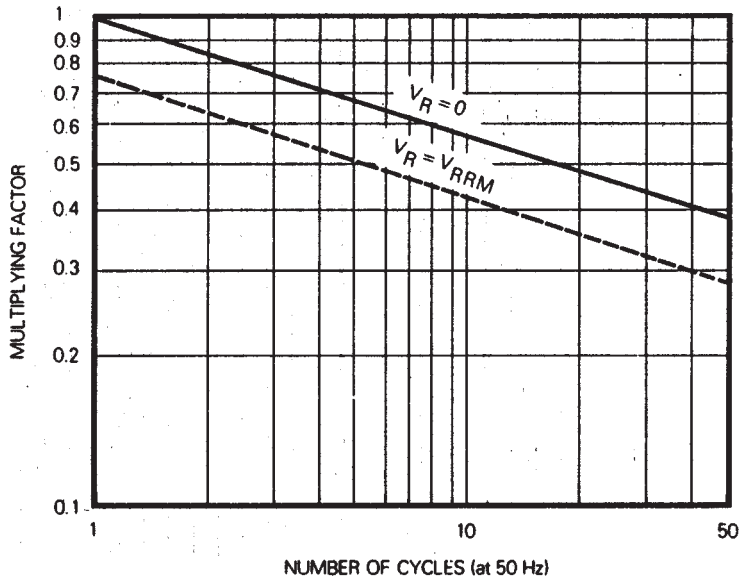


*FIG. 6 MULTIPLYING FACTOR FOR NON-REPETITIVE FORWARD CURRENT*

## SV20

### PACKAGE DETAILS

For further package information, please contact your local Customer Service Centre. All dimensions in mm, unless stated otherwise. DO NOT SCALE.

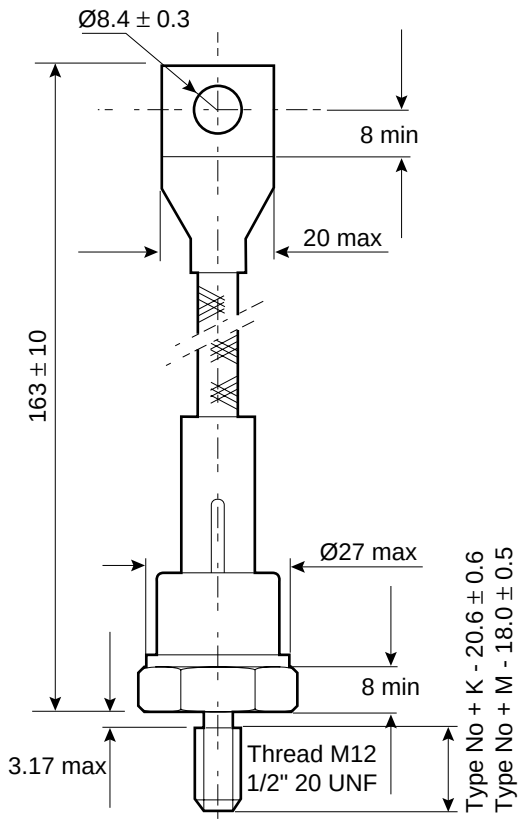


Nominal weight: 120g
Mounting torque: 15Nm ±10%

**Package outine type code: DO8**

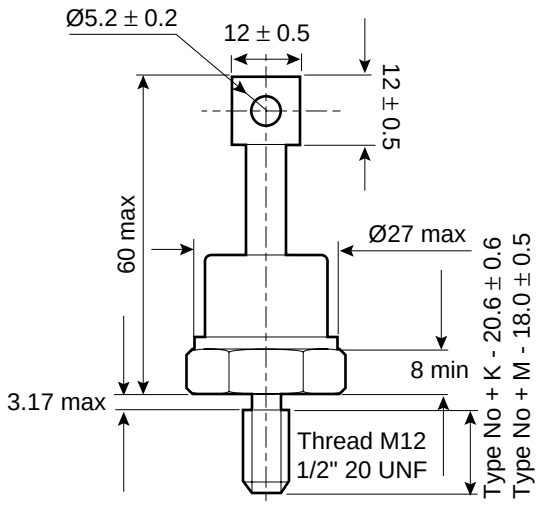


Nominal weight: 120g
Mounting torque: 15Nm ±10%

**Package outine type code: DO8C**

### ASSOCIATED PUBLICATIONS

| Title | Application Note Number |
|---|---|
| Calculating the junction temperature or power semiconductors | AN4506 |
| Thyristor and diode measurement with a multi-meter | AN4853 |
| Use of $V_{TO}$, $r_T$ on-state characteristic | AN5001 |

## POWER ASSEMBLY CAPABILITY

The Power Assembly group was set up to provide a support service for those customers requiring more than the basic semiconductor, and has developed a flexible range of heatsink / clamping systems in line with advances in device types and the voltage and current capability of our semiconductors.

We offer an extensive range of air and liquid cooled assemblies covering the full range of circuit designs in general use today. The Assembly group continues to offer high quality engineering support dedicated to designing new units to satisfy the growing needs of our customers.

Using the up to date CAD methods our team of design and applications engineers aim to provide the Power Assembly Complete solution (PACs).

## HEATSINKS

Power Assembly has it's own proprietary range of extruded aluminium heatsinks. They have been designed to optimise the performance or our semiconductors. Data with respect to air natural, forced air and liquid cooling (with flow rates) is available on request.

For further information on device clamps, heatsinks and assemblies, please contact your nearest Sales Representative or the factory.

DYNEX SEMICONDUCTOR

**http://www.dynexsemi.com**

**e-mail: power_solutions@dynexsemi.com**

HEADQUARTERS OPERATIONS
**DYNEX SEMICONDUCTOR LTD**
Doddington Road, Lincoln.
Lincolnshire. LN6 3LF. United Kingdom.
Tel: 00-44-(0)1522-500500
Fax: 00-44-(0)1522-500550

**DYNEX POWER INC.**
Unit 7 - 58 Antares Drive,
Nepean, Ontario, Canada K2E 7W6.
Tel: 613.723.7035
Fax: 613.723.1518
Toll Free: 1.888.33.DYNEX (39639)

CUSTOMER SERVICE CENTRES
**France, Benelux, Italy and Spain** Tel: +33 (0)1 69 18 90 00. Fax: +33 (0)1 64 46 54 50
**North America** Tel: 011-800-5554-5554. Fax: 011-800-5444-5444
**UK, Germany, Scandinavia & Rest Of World** Tel: +44 (0)1522 500500. Fax: +44 (0)1522 500020

SALES OFFICES
**France, Benelux, Italy and Spain** Tel: +33 (0)1 69 18 90 00. Fax: +33 (0)1 64 46 54 50
**Germany** Tel: 07351 827723
**North America** Tel: (613) 723-7035. Fax: (613) 723-1518. Toll Free: 1.888.33.DYNEX (39639) /
Tel: (831) 440-1988. Fax: (831) 440-1989 / Tel: (949) 733-3005. Fax: (949) 733-2986.
**UK, Germany, Scandinavia & Rest Of World** Tel: +44 (0)1522 500500. Fax: +44 (0)1522 500020
These offices are supported by Representatives and Distributors in many countries world-wide.
© Dynex Semiconductor 2000 Publication No. DS4085-3 Issue No. 3.0 January 2000
TECHNICAL DOCUMENTATION – NOT FOR RESALE. PRINTED IN UNITED KINGDOM

**Datasheet Annotations:**

Dynex Semiconductor annotate datasheets in the top right hard corner of the front page, to indicate product status. The annotations are as follows:-

**Target Information:** This is the most tentative form of information and represents a very preliminary specification. No actual design work on the product has been started.

**Preliminary Information:** The product is in design and development. The datasheet represents the product as it is understood but details may change.

**Advance Information:** The product design is complete and final characterisation for volume production is well in hand.

**No Annotation:** The product parameters are fixed and the product is available to datasheet specification.

This publication is issued to provide information only which (unless agreed by the Company in writing) may not be used, applied or reproduced for any purpose nor form part of any order or contract nor to be regarded as a representation relating to the products or services concerned. No warranty or guarantee express or implied is made regarding the capability, performance or suitability of any product or service. The Company reserves the right to alter without prior notice the specification, design or price of any product or service. Information concerning possible methods of use is provided as a guide only and does not constitute any guarantee that such methods of use will be satisfactory in a specific piece of equipment. It is the user's responsibility to fully determine the performance and suitability of any equipment using such information and to ensure that any publication or data used is up to date and has not been superseded. These products are not suitable for use in any medical products whose failure to perform may result in significant injury or death to the user. All products and materials are sold and services provided subject to the Company's conditions of sale, which are available on request.

All brand names and product names used in this publication are trademarks, registered trademarks or trade names of their respective owners.