查询AAT4670供应商

SmartSwitch™

General Description

The AAT4670 SmartSwitch™ is part of the Analogic Tech Application Specific Power MOSFET (ASPM™) line of products. The AAT4670 consists of dual, independent, 1A current limited, slew rate controlled P-channel MOSFET power switches with a dedicated source and drain pin assigned to each switch. The internal circuitry automatically derives power from the higher of the two input power source pins with a low operating quiescent current of 18µA. In shutdown mode, the supply current decreases to less than 1µA. The switches operate with inputs ranging from 2.2V to 5.5V, making them ideal for 2.5V, 3V and 5V systems. The dual configuration permits integration of the load switch function for systems with two different power busses. Independent under voltage lockout circuits will shut down the corresponding switch if its input voltage falls below the under voltage lockout threshold. If the die temperature reaches the thermal limit, both switches thermal cycle off and on indefinitely without damage until the thermal condition is removed. An open drain $\overline{\text{FAULT}}$ output signals an over current or over temperature condition for each channel. Input logic levels are TTL compatible.

The AAT4670 is available in 8 pin SOP, TSSOP or MSOP specified over -40 to 85 °C temperature range.

Features

- 2.2V to 5.5V input voltage range
- 1A current limit per channel
- 95mΩ typical $R_{DS(ON)}$
- Fast transient response:
  - < 1µs response to short circuit
- Low 18µA quiescent current
- 1µA max with Switches off
- Slew rate controlled
- Thermal shutdown
- Fault flags with 3ms blanking
- Under voltage lockout
- Temp range -40 to 85ºC
- 8-pin SOP, TSSOP or MSOP packages

Applications

- Notebook Computer
- PDA, Subnotebook
- USB ports
- Peripheral ports
- Hot swap supplies
- Media bay

Preliminary Information

Typical Application

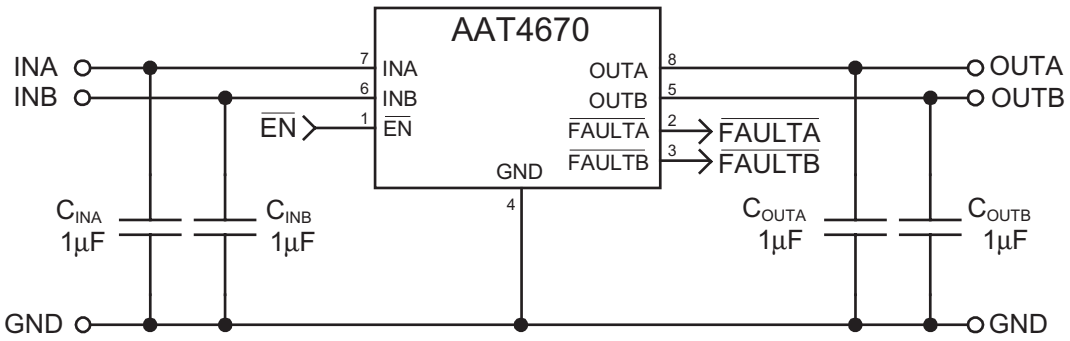

Pin Descriptions

Pin #	Symbol	Function
1	$\overline{EN}$	Active-low Enable input (Logic low turns the switches on)
2	$\overline{FAULTA}$	Open drain output signals over-current for OUTA and over-temperature condition
3	$\overline{FAULTB}$	Open drain output signals over-current for OUTB and over-temperature condition
4	GND	Ground connection
5	OUTA	P-channel MOSFET drain channel A
6	INA	P-channel MOSFET source channel A
7	INB	P-channel MOSFET source channel B
8	OUTB	P-channel MOSFET drain channel B

Pin Configuration

SOP-8

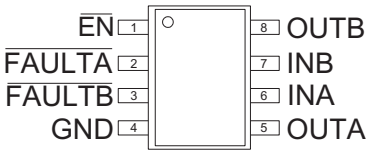

TSSOP-8

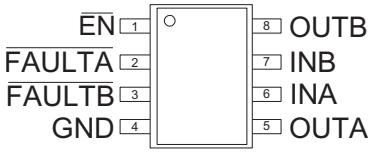

MSOP-8

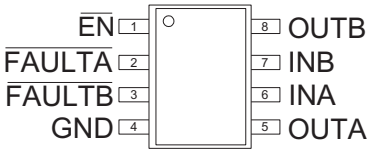

Absolute Maximum Ratings (T_A=25°C unless otherwise noted)

Symbol	Description	Value	Units
$V_{INA,B}$	INA or INB to GND	-0.3 to 6	V
$V_{OUTA,B}$	OUTA or OUTB to GND	-0.3 to 6	V
$V_{FAULTA,B}$	$\overline{FAULTA}$ or $\overline{FAULTB}$ to GND	-0.3 to 6	V
I_{OUT}	Output Current	Internally Limited	A
T_J	Operating Junction Temperature Range	-40 to 150	°C
V_{ESD}	ESD Rating[1] - HBM	4000	V
T_{LEAD}	Maximum Soldering Temperature (at Leads)	300	°C

Note: Stresses above those listed in Absolute Maximum Ratings may cause permanent damage to the device. Functional operation at conditions other than the operating conditions specified is not implied. Only one Absolute Maximum rating should be applied at any one time.

Note 1: Human body model is a 100pF capacitor discharged through a 1.5kΩ resistor into each pin.

Thermal Characteristics

Symbol	Description	Value	Units
Θ_{JA}	Maximum Thermal Resistance[2] (SOP-8)	100	°C/W
P_D	Maximum Power Dissipation[2] (SOP-8)	1.25	W

Note 2: Mounted on a demo board.

Electrical Characteristics (V_{IN} = 5V, T_A = 25°C unless otherwise noted. Bold values designate -40 to 85°C temperature range)

Symbol	Description	Conditions	Min	Typ	Max	Units
V_{IN}	Operation Voltage		**2.2**		**5.5**	V
I_Q	Quiescent Current	V_{INA} or V_{INB} = 5V I_{OUTA} = I_{OUTB} = 0		18	**40**	µA
$I_{Q(OFF)}$	Off Supply Current	$\overline{EN}$ = V_{IN}, V_{INA}=V_{INB} =5V, OUTA, OUTB open			**1**	µA
$I_{SD(OFF)}$	Off Switch Current	$\overline{EN}$ = V_{IN}, V_{INA}=V_{INB} =5V, V_{OUTA}=V_{OUTB} =0V		0.1	**1**	µA
V_{UVLO}	Undervoltage Lockout			1.7	**2.2**	V
$R_{DS(ON)}$	On-Resistance Channel A or B	V_{IN}=5.0V		95	130	mΩ
		V_{IN}=3.0V		105	150	
T_{CRDS}	Switch Resistance Tempco			2800		ppm/°C
I_{LIM}	Current Limit Channel A or B	V_{OUT} < V_{IN} - 0.5V	1.0	1.25	1.50	A
t_1	Output Turn-On Delay Time	V_{IN}=5V, OUT=0 to 10%, R_{LOAD}=20Ω		100	**1000**	µs
t_2	Output Rise Time	V_{IN}=5V, OUT=10% to 90%, R_{LOAD}=20Ω		100	**1000**	µs
t_3	Output Turn-Off Delay Time	V_{IN}=5V, OUT=100% to 90%, R_{LOAD}=20Ω		10	**20**	µs
t_4	Output Fall Time	V_{IN}=5V, OUT=90% to 10%, R_{LOAD}=20Ω		5	**20**	µs
$V_{EN(L)}$	EN Input Low Voltage	V_{IN}=2.7V to 5.5V[3]			**0.8**	V
$V_{EN(H)}$	EN Input High Voltage	V_{IN}=2.7V to <3.6V	**2.0**			V
		V_{IN}=3.6V to 5.5V	**2.4**			
$I_{EN(SINK)}$	EN Input Leakage	V_{EN}=5.5V		0.01	**1**	µA
t_{RESP}	Current Loop Response	V_{IN}=5V		750		ns
$V_{FAULTLOW}$	$\overline{FAULT}$ logic Output Low	I_{SINK} = 1mA			**0.4**	V
I_{SINK}	$\overline{FAULT}$ Logic Output High Leakage Current	V_{FAULT} = 5.5V		0.5	**1**	µA
T_{blank}	$\overline{Fault}$ Blanking Time			3		ms
T_{SD}	Over-temperature threshold			125		°C

Note 3: For V_{IN} outside this range consult typical EN threshold curve.

Typical Characteristics

Quiescent Current vs. Temperature

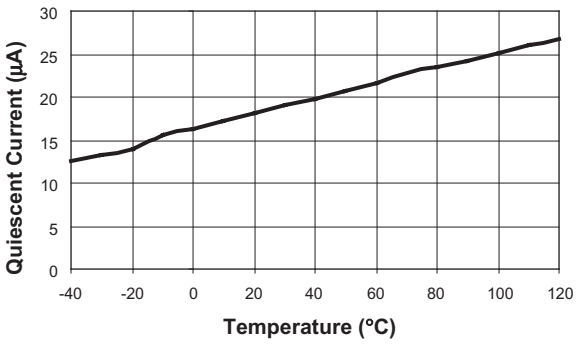

Quiescent Current vs. Input Voltage

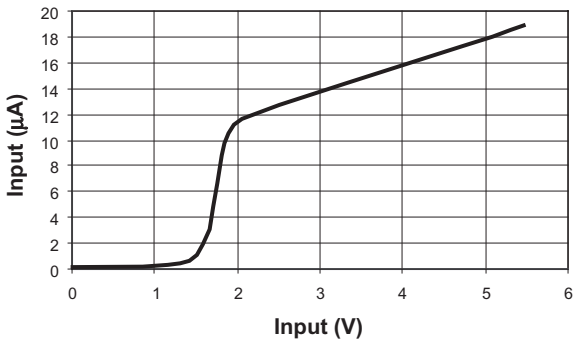

Off-Supply Current vs. Temperature

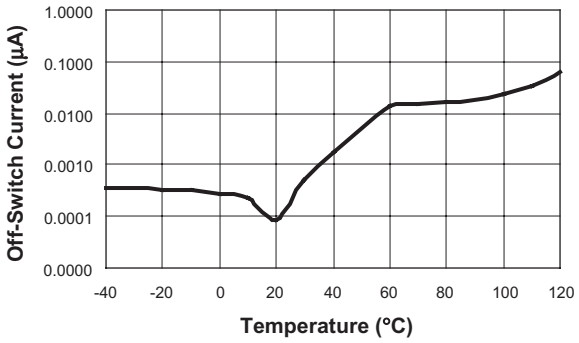

Off-Switch Current vs. Temperature

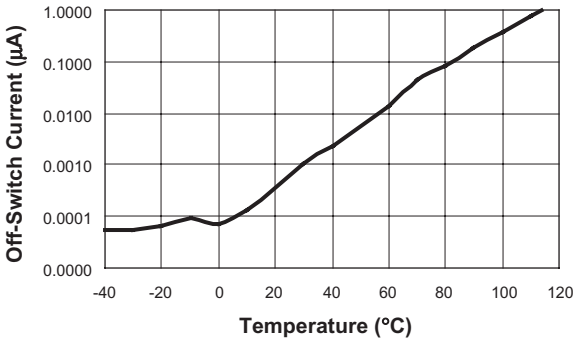

Current Limit vs. Output Voltage

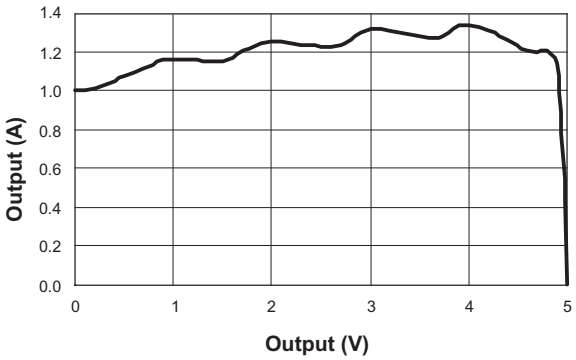

$R_{DS(ON)}$ vs. Temperature

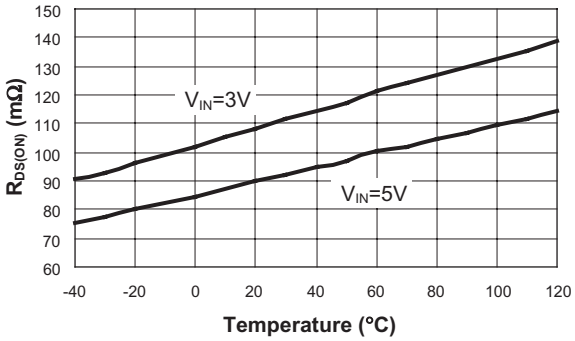

Typical Characteristics

Turn-ON/OFF Response with 20Ω 1µF loads

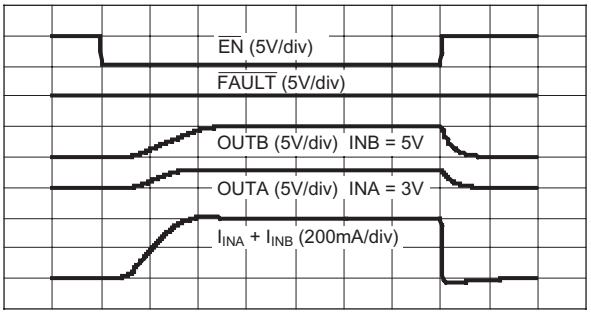

100µs/div

FAULT Delay Start Into 0.6Ω Load

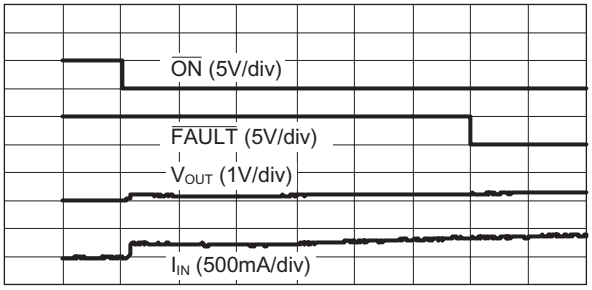

500µs/div

Short Circuit Through 0.6Ω

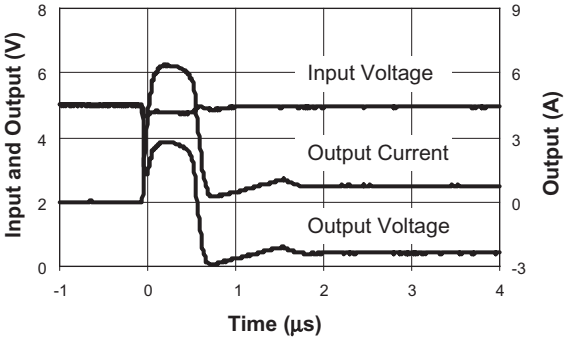

Short Circuit Through 0.3Ω

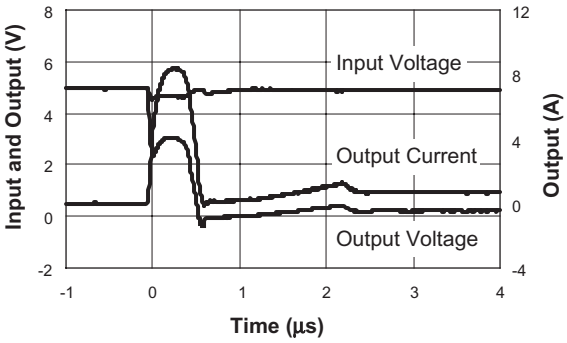

Thermal Shutdown Response

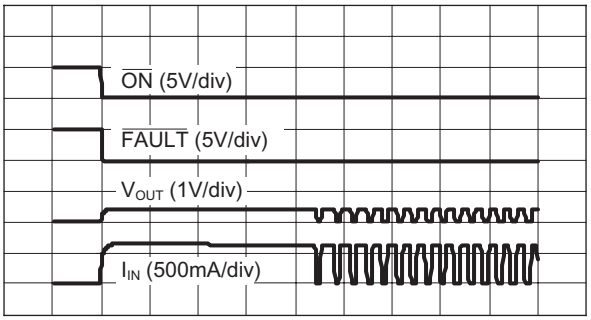

200ms/div

Typical EN Threshold vs. V_{IN}

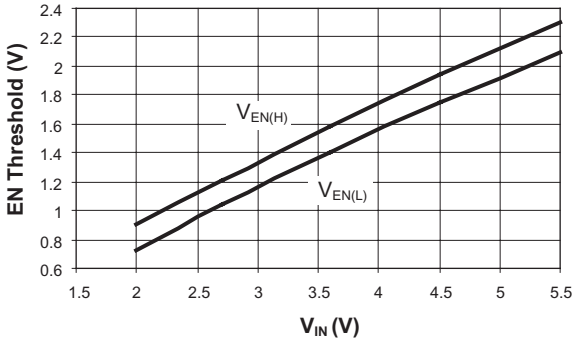

Functional Block Diagram

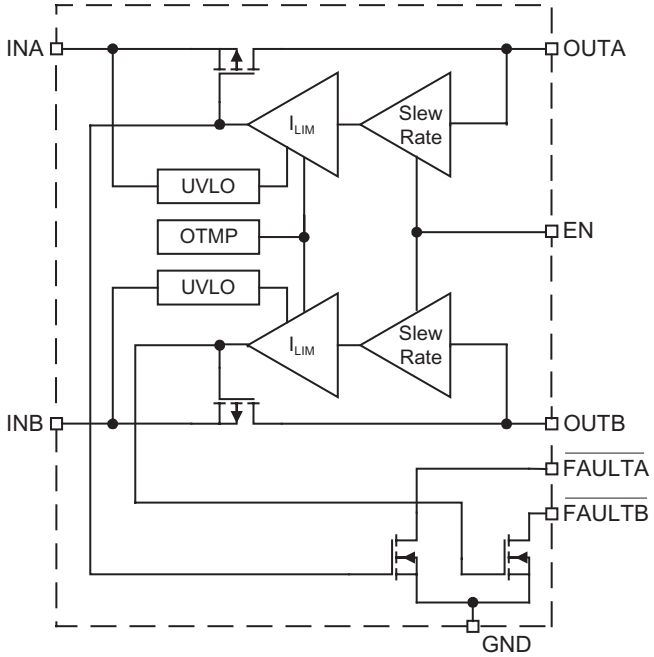

Functional Description

The AAT4670 dual channel load switch, implemented with isolated independent P-channel MOSFET devices, is ideal for applications where dual power supplies are in continuous use. Typical applications for this include products with multiple USB ports, or ports requiring protection that operate off of separate power supplies. The input power supplies can be any voltage between 2.2V and 5.5V in any combination; one supply is not required to be the higher voltage. Internally, the power supply for the control circuitry will automatically switch to the higher of the two supplies. In the case where the supplies are equal, +/- 30mV of hysteresis prevents the internal supply from oscillating between the two input supplies. The low impedance P-channel MOSFET devices are identical in size allowing for layout flexibility. They are controlled by a patented fast acting current loop, and respond to short circuits in a fraction of a microsecond, which eases requirements on the input capacitors. With such fast transient response time, the upstream power supply rail is naturally isolated from the protected port. The AAT4670 is internally protected from thermal damage by an over temperature detection circuit. If a high ambient temperature or an over current condition causes the die temperature to reach the internal thermal limit, both power devices are switched off until the die temperature cools to a level below the thermal limit threshold. The device will thermal cycle indefinitely until the over current or high temperature condition is removed. Due to the high thermal conductivity of silicon and the size of the die, the temperature across the die is relatively uniform at high temperatures, and therefore, as a precaution, both power devices are switched off when the thermal threshold is reached. Since the power devices operate off of independent power supplies, independent under voltage lockout circuits are employed. If the power supply to one channel falls below the under voltage lockout threshold, the other channel will remain active. A current limit condition is reported by the open drain $\overline{\text{FAULT}}$ output associated with the appropriate channel. A thermal limit condition is reported by both $\overline{\text{FAULT}}$ outputs. A three millisecond blanking interval prevents false reporting during the charging of a capacitive load, which typically occurs during device turn-on, but may also occur during a port hot plug-in event.

The AAT4670 is ideally suited for protection of peripheral ports such as USB, PS2 and parallel ports.

Applications Information

Input Capacitor

The input capacitors, C_{INA} and C_{INB}, protect the input power supplies from current transients generated by loads attached to the AAT4670. If a short circuit is suddenly applied to an output of the AAT4670, there is a 750 nanosecond period during which a large current flows before current limit circuitry activates. (See characteristic curve "Short Circuit Through 0.3Ω.") In this event, a properly sized input capacitor can dramatically reduce the voltage transient seen by the power supply and other circuitry upstream from the AAT4670. C_{IN} should be located as close to the device V_{IN} pin as practically possible. Ceramic, tantalum or aluminum electrolytic capacitors may be selected for C_{IN}. There is no specific capacitor ESR requirement for C_{IN}. However, for higher current operation, ceramic capacitors are recommended for C_{IN} due to their inherent capability over tantalum capacitors to withstand input current surges from low impedance sources such as batteries in portable devices.

Output Capacitor

In order to insure stability while the current limit is active, a small capacitance of approximately 1µF is required on each output. No matter how big the output capacitor, output current is limited to the value set by the AAT4670 current limiting circuitry, allowing very large output capacitors to be used. For example, USB ports are specified to have at least 120µF of capacitance down stream from their controlling power switch. The current limiting circuit will allow an output capacitance of 1000µF or more without disturbing the upstream power supply.

Attaching Loads

Capacitive loads attached to the AAT4670 will charge at a rate no greater than the current limit setting.

$\overline{\text{FAULT}}$ Output

$\overline{\text{FAULT}}$ flags are provided to alert the system if an AAT4670 load is not receiving sufficient voltage to operate properly. If current limit or over temperature circuits in any combination are active for more than approximately three milliseconds, the associated $\overline{\text{FAULT}}$ flag is pulled to ground through approximately 100Ω. Removal of voltage or current transients of less than three milliseconds prevents capacitive loads connected to either AAT4670 output from activating the associated $\overline{\text{FAULT}}$ flag when they are initially attached. Pull up resistances of 1kΩ to 100kΩ are recommended. Since $\overline{\text{FAULT}}$ is an open drain terminal, it may be pulled up to any unrelated voltage less than the maximum operating voltage of 5.5V, allowing for level shifting between circuits.

Thermal Considerations

Since the AAT4670 has internal current limit and over temperature protection, junction temperature is rarely a concern. However, if the application requires large currents in a hot environment, it is possible that temperature rather than current limit will be the dominant regulating condition. In these applications, the maximum current available without risk of an over temperature condition must be calculated. The maximum internal temperature while current limit is not active can be calculated using Equation 1.

$$T_{J(MAX)} = I_{MAX}^2 \times R_{DS(ON)}(MAX) \times R_{\theta JA} + T_A(MAX)$$

In Equation 1, I_{MAX} is the maximum current required by the load. $R_{DS(ON)}(MAX)$ is the maximum rated $R_{DS(ON)}$ of the AAT4670 at high temperature. $R_{\theta JA}$ is the thermal resistance between the AAT4670 die and the board onto which it is mounted. $T_A(MAX)$ is the maximum temperature that the PCB under the AAT4670 would be if the AAT4670 were not dissipating power. Equation 1 can be rearranged to solve for I_{MAX}; Equation 2.

$$I_{MAX} = \sqrt{\frac{T_{SD}(MIN) - T_A(MAX)}{R_{DS(ON)}(MAX) \times R_{\theta JA}}}$$

$T_{SD}(MIN)$ is the minimum temperature required to activate the AAT4670 over temperature protection. With typical specification of 125°C, 115°C is a safe minimum value to use.

For example, if an application is specified to operate in 50°C environments, the PCB operates at temperatures as high as 85°C. The application is sealed and its PCB is small, causing $R_{\theta JA}$ to be approximately 120°C/W. Using Equation 2,

$$I_{MAX} = \sqrt{\frac{115 - 85}{160m \times 120}} = 1.25\ A$$

To prevent thermal limiting, the operating load current in the application must be less than 1.25A which lies in the current limiting range, so in this application, any operating current below the current limit threshold is allowed.

Timing Diagram

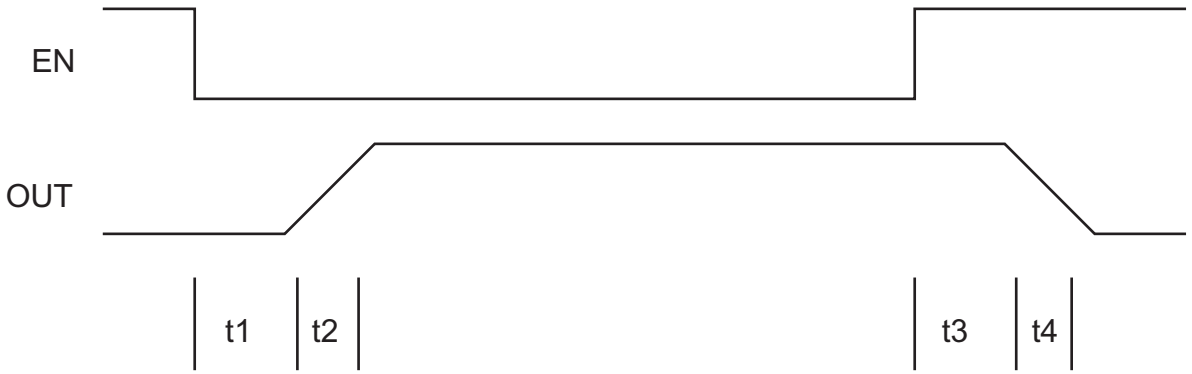

Ordering Information

Package	Marking	Part Number	
		Bulk	Tape and Reel
SOP-8		AAT4670IAS-B1	AAT4670IAS-T1
TSSOP-8		AAT4670IHS-B1	AAT4670IHS-T1
MSOP-8		AAT4670IKS-B1	AAT4670IKS-T1

Package Information

SOP-8

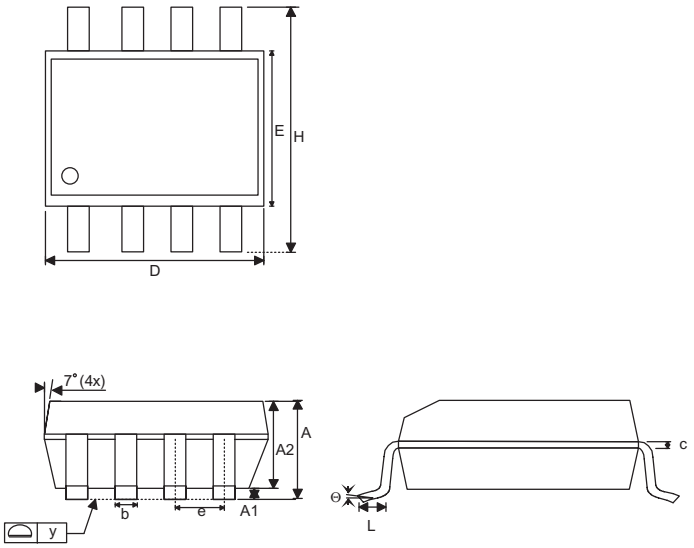

Dim	Millimeters		Inches	
	Min	Max	Min	Max
A	1.35	1.75	0.053	0.069
A1	0.10	0.25	0.004	0.010
A2	1.45		0.057	
B	0.33	0.51	0.013	0.020
C	0.19	0.25	0.007	0.010
D	4.80	5.00	0.189	0.197
E	3.80	4.00	0.150	0.157
e	1.27		0.050	
H	5.80	6.20	0.228	0.244
L	0.40	1.27	0.016	0.050
Y	0.00	0.10	0.000	0.004
θ1	0°	8°	0°	8°

Note:
1. PACKAGE BODY SIZES EXCLUDE MOLD FLASH PROTRUSIONS OR GATE BURRS.
2. TOLERANCE 0.1000mm (4mil) UNLESS OTHERWISE SPECIFIED
3. COPLANARITY: 0.1000mm
4. DIMENSION L IS MEASURED IN GAGE PLANE.
5. CONTROLLING DIMENSION IS MILLIMETER; CONVERTED INCH DIMENSIONS ARE NOT NECESSARILY EXACT.

TSSOP-8

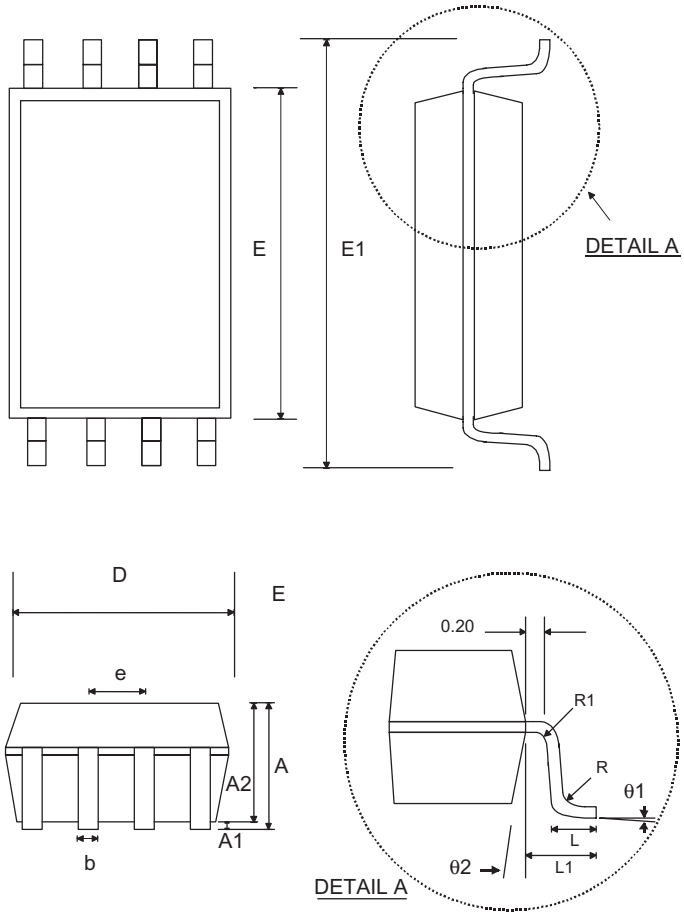

Dim	Millimeters		Inches	
	Min	Max	Min	Max
A	1.05	1.20	0.041	0.047
A1	0.05	0.15	0.002	0.006
A2	-	1.05	-	0.041
b	0.25	0.30	0.010	0.012
c	0.127		0.005	
D-8	2.90	3.10	0.114	0.122
D-28	9.60	9.80	0.378	0.386
E	4.30	4.50	0.170	0.177
E1	6.20	6.60	0.244	0.260
e	0.65 BSC		0.025 BSC	
L	0.50	0.70	0.20	0.028
L1	1.0		0.039	
R	0.09	-	0.004	-
R1	0.09	-	0.004	-
θ1	0°	8°	0°	8°
θ2	12°			

MSOP-8

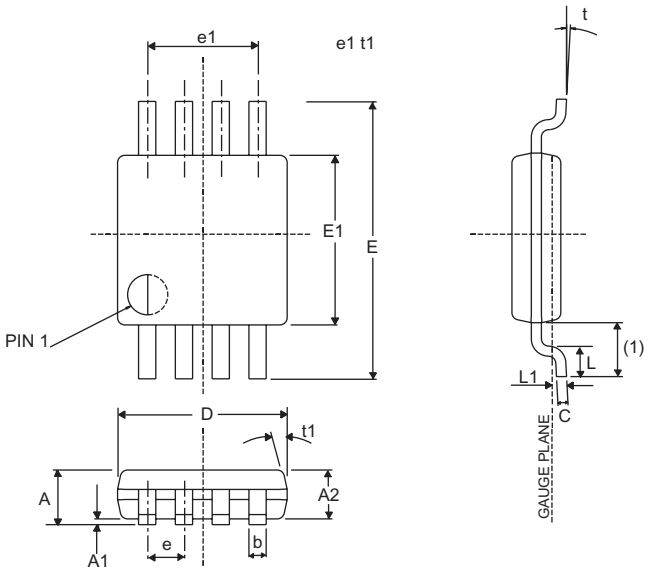

Dim	Millimeters		Inches	
	Min	Max	Min	Max
A	0.08	1.10	0.003	0.043
A1	0.00	0.15	0.000	0.005
A2	0.75	0.95	0.029	0.037
b	0.22	0.38	0.008	0.014
C	0.08	0.23	0.003	0.009
D	2.90	3.10	0.114	0.122
E	4.80	5.00	0.188	0.196
E1	2.90	3.10	0.114	0.122
e	0.65 BSC		0.025 BSC	
e1	1.95 BSC		0.076 BSC	
L	0.40	0.80	0.015	0.031
L1	0.95 REF		0.037 REF	
L2	0.254 BSC		0.010 BSC	
θ	0°	8°	0°	8°
θ2	5°	15°	5°	15°

Note:
1. PACKAGE BODY SIZES EXCLUDE MOLD FLASH PROTRUSIONS OR GATE BURRS.
2. TOLERANCE± 0.1000mm (4mil) UNLESS OTHERWISE SPECIFIED
3. COPLANARITY: 0.1000mm
4. DIMENSION L IS MEASURED IN GAGE PLANE.
5. CONTROLLING DIMENSION IS MILLIMETER, CONVERTED INCH DIMENSIONS ARE NOT NECESSARILY EXACT.

This page intentionally left blank.

Advanced Analogic Technologies, Inc.
1250 Oakmead Parkway, Suite 310, Sunnyvale, CA 94086
Phone (408) 524-9684
Fax (408) 524-9689

Copyright © Each Manufacturing Company.

All Datasheets cannot be modified without permission.

This datasheet has been download from :

www.AllDataSheet.com

100% Free DataSheet Search Site.

Free Download.

No Register.

Fast Search System.

www.AllDataSheet.com