查询TA7267供应商 捷多邦，专业PCB打样工厂，24小时加急出货

TOSHIBA BIPOLAR LINEAR INTEGRATED CIRCUIT SILICON MONOLITHIC

TA7267BP

BRIDGE DRIVER

The TA7267BP is a Bridge Driver for brushed DC Motor Rotation control.
Forward Rotation, Reverse Rotation, Stop and Braking operations are available.
It's designed for Loading and Reel Motor driver for VCR and Tape Deck, and any other consumer and industrial applications.
TA7267BP have Operation Supply Voltage terminal and Motor Driving Supply Voltage terminal independently, therefore Servo control operation is applicable.

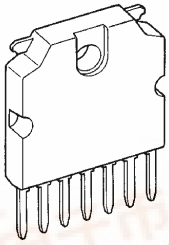

HSIP7-P-2.54A
Weight : 2.15 g (Typ.)

FEATURES

- Output Current Up to 1.0 A (AVE.), and 3.0 A (PEAK).
- 4 Function Modes (CW, CCW, STOP and Brake) are Controlled by 2 Logic Signals Fed Into 2 Input Terminals.
- Build in Over Current Protector and Thermal Shut Down Circuit.
- Operating Voltage Range : $V_{CC\,(opr.)}$ = 6~18 V, $V_{S\,(opr.)}$ = 0~18 V

BLOCK DIAGRAM

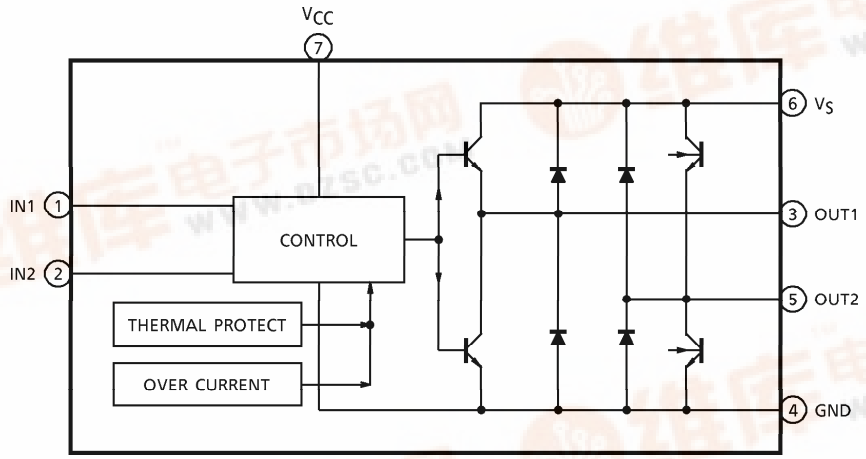

980910EBA1

● TOSHIBA is continually working to improve the quality and the reliability of its products. Nevertheless, semiconductor devices in general can malfunction or fail due to their inherent electrical sensitivity and vulnerability to physical stress. It is the responsibility of the buyer, when utilizing TOSHIBA products, to observe standards of safety, and to avoid situations in which a malfunction or failure of a TOSHIBA product could cause loss of human life, bodily injury or damage to property. In developing your designs, please ensure that TOSHIBA products are used within specified operating ranges as set forth in the most recent products specifications. Also, please keep in mind the precautions and conditions set forth in the TOSHIBA Semiconductor Reliability Handbook.
● The products described in this document are subject to the foreign exchange and foreign trade laws.
● The information contained herein is presented only as a guide for the applications of our products. No responsibility is assumed by TOSHIBA CORPORATION for any infringements of intellectual property or other rights of the third parties which may result from its use. No license is granted by implication or otherwise under any intellectual property or other rights of TOSHIBA CORPORATION or others.
● The information contained herein is subject to change without notice.

找PDF 维库一下 pdf.dzsc.com

PIN FUNCTION

PIN No.	SYMBOL	FUNCTIONAL DESCRIPTION
1	IN1	Input terminal
2	IN2	Input terminal
3	OUT1	Output terminal
4	GND	GND terminal
5	OUT2	Output terminal
6	V_S	Voltage supply terminal
7	V_{CC}	Voltage supply terminal

INTERNAL CIRCUIT

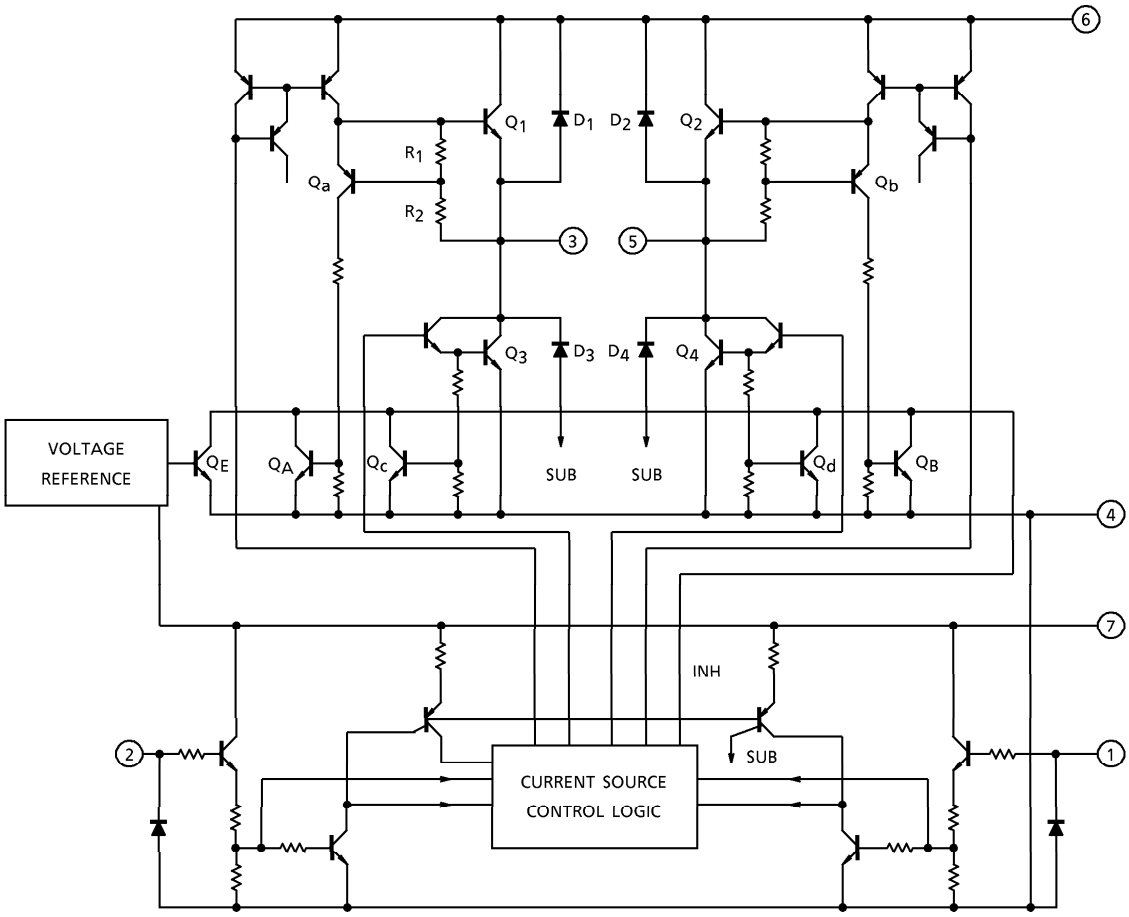

FUNCTION

IN1	IN2	OUT1	OUT2	MODE
1	1	L	L	Brake
0	1	L	H	CW / CCW
1	0	H	L	CCW / CW
0	0	High Impedance		Stop

MAXIMUM RATINGS (Ta = 25°C)

CHARACTERISTIC		SYMBOL	RATING	UNIT
Supply Voltage	PEAK	V_{CC} (MAX.)	25	V
	OPERATE	V_{CC} (opr.)	18	
Output Current	PEAK	I_O (PEAK)	3.0	A
	AVE.	I_O (AVE.)	1.0	
Power Dissipation (Tc = 25°C)		P_D	12.5	W
Operating Temperature		T_{opr}	−30~75	°C
Storage Temperature		T_{stg}	−55~150	°C

ELECTRICAL CHARACTERISTICS (Unless otherwise specified, Ta = 25°C)

CHARACTERISTIC		SYMBOL	TEST CIR-CUIT	TEST CONDITION	MIN.	TYP.	MAX.	UNIT
Supply Current		I_{CC1}	—	V_{CC} = 18 V, Output OFF Stop mode	—	1.8	3.5	mA
		I_{CC2}		V_{CC} = 18 V, Output OFF CW / CCW mode	—	8.3	12	
		I_{CC3}		V_{CC} = 18 V, Brake mode	—	8.5	13	
Saturation Voltage	Upper	$V_{S1}U$	—	V_{CC} = 18 V, I_O = 0.1 A	—	—	1.1	V
	Lower	$V_{S1}L$			—	—	1.0	
	Upper	$V_{S2}U$		V_{CC} = 18 V, I_O = 1.0 A	—	1.2	1.5	
	Lower	$V_{S2}L$			—	1.05	1.4	
Output Transistor Leakage Current	Upper	I_L U	—	V_S = 25 V	—	—	50	μA
	Lower	I_L L			—	—	50	
Input Voltage 1, 2		$V_{IN (H)}$	—	T_j = 25°C, pin ① and pin ②	3.0	—	—	V
		$V_{IN (L)}$			—	—	0.8	
Input Current 1, 2		$I_{IN1, 2}$	—	T_j = 25°C, pin ① and pin ②	—	1	30	μA
Diode Forward Voltage		V_F U	—	I_F = 1 A	—	2.0	—	V
		V_F L			—	1.3	—	
Limiting Current		I_{SC}	—	—	—	2.5	—	A

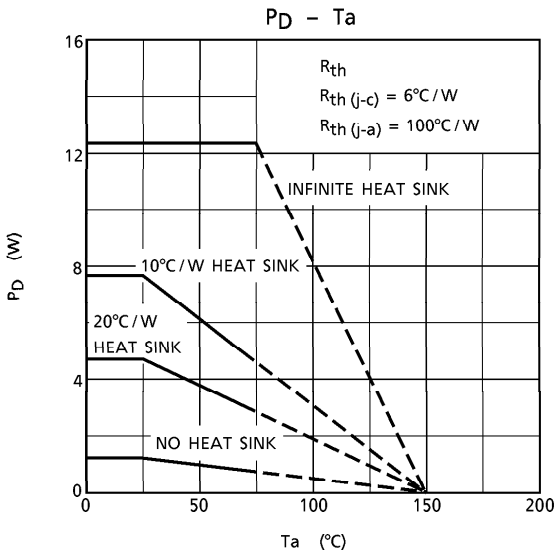

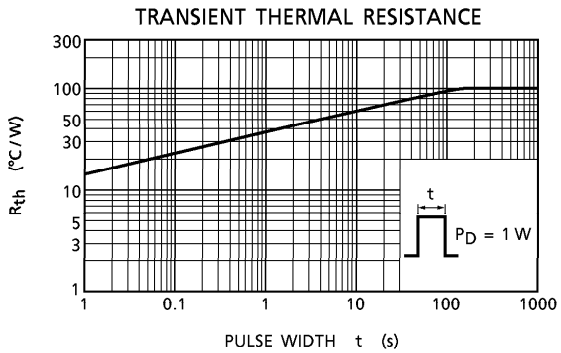

TEST CIRCUIT

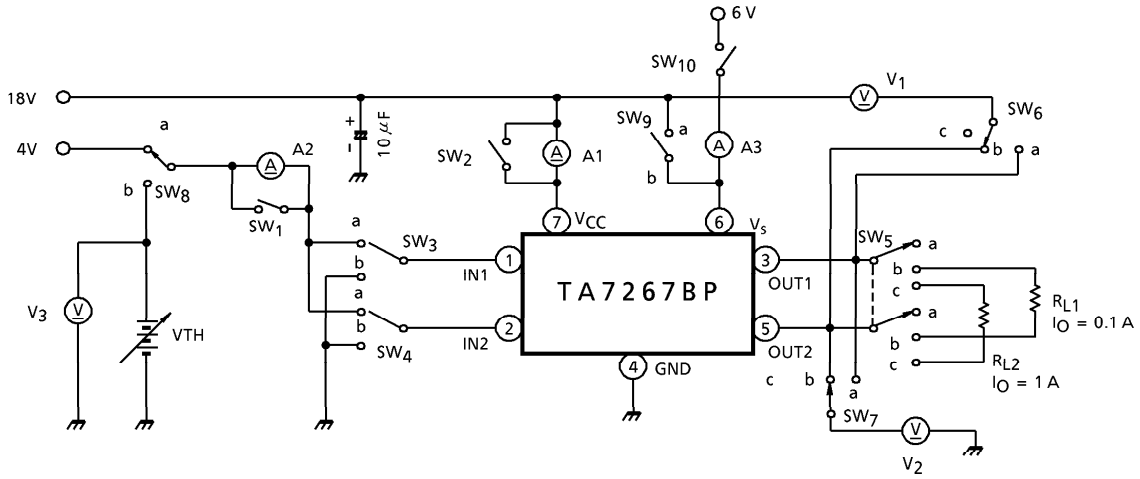

TEST METHOD

CHARAC-TERISTIC	SW_1	SW_2	SW_3	SW_4	SW_5	SW_6	SW_7	SW_8	SW_9	TEST METER
I_{CC1}	CLOSE	OPEN	b	b	a	c	c	a	a	A1 Use
I_{CC2}	CLOSE	OPEN	a	b	a	c	c	a	a	
I_{CC2}	CLOSE	OPEN	b	a	a	c	c	a	a	
I_{CC3}	CLOSE	OPEN	a	a	a	c	c	a	a	
$V_{S1\ U}$	CLOSE	CLOSE	b	a	b	a	c	a	a	V_1 Use, I_O = 0.1 A
$V_{S1\ U}$	CLOSE	CLOSE	a	b	b	b	c	a	a	
$V_{S1\ L}$	CLOSE	CLOSE	b	a	b	c	b	a	a	V_2 Use, I_O = 0.1 A
$V_{S1\ L}$	CLOSE	CLOSE	a	b	b	c	a	a	a	
$V_{S2\ U}$	CLOSE	CLOSE	b	a	c	a	c	a	a	V_1 Use, I_O = 1 A
$V_{S2\ U}$	CLOSE	CLOSE	a	b	c	b	c	a	a	
$V_{S2\ L}$	CLOSE	CLOSE	b	a	c	c	b	a	a	V_2 Use, I_O = 1 A
$V_{S2\ L}$	CLOSE	CLOSE	a	b	c	c	a	a	a	
V_{TH1}	CLOSE	CLOSE	a	b	b	c	c	b	a	V_3 Use Function Check
V_{TH2}	CLOSE	CLOSE	b	a	b	c	c	b	a	
I_{SC}	CLOSE	CLOSE	a	b	b	c	c	a	b	A3 Use, SW_{10} = CLOSE
I_{IN1}	OPEN	CLOSE	a	b	b	c	c	a	a	A2 Use
I_{IN2}	OPEN	CLOSE	b	a	b	c	c	a	a	

NOTES WHEN USING THE TA7267BP

The full bridge driver, TA7267BP, is an IC specifically developed to control rotation switching in brush motors. This IC has been carefully designed and strengthened to withstand counter-electromotive force or start up rush current, which are problems in driving brush motors.
However, as with other power ICs, application circuits must be designed not to apply surge voltage or excess current that exceeds the standard values.
In addition, when designing PCBs, make sure the wiring pattern does not cause oscillation, which can result in equipment malfunction or destruction of the IC.
The following are notes on TA7267BP use. These should be reflected at the design stage.

1. Maximum voltage and current

   The maximum supply voltage (pins ⑥ and ⑦) for TA7267BP is 25 V.
   Operating supply voltage is in the range of 6~18 V. No voltage exceeding this range should be applied to pins ⑥ or ⑦.
   The maximum current is 1.0 A (AVE.) or 3.0 A (PEAK). The circuit should be designed so that rush current at startup does not exceed peak current, and average current at steady operation does not exceed 1.0 A.

2. External diodes

   As the block diagram shows, TA7267BP has internal diodes. The lower two diodes, which are the IC's internal parasitic diodes, have a relatively large capacitance. However, when a motor with a large reactance such as a core motor is driven, the upper two diodes may be damaged by the motor's counter-electromotive force.
   In such a case, connect external diodes in parallel.
   The lower diodes should not be subjected to high current. Therefore, in such cases as brake operation, external diodes should be connected.

3. PCB design

   The following points concern the TA7267BP pattern design around the power supply line (pins ⑥ and ⑦) and the pattern design of the GND (pin ④).

   a. Ensure that the bypass capacitor between pin ⑥, pin ⑦, and GND does not share impedance with other lines.

   b. The GND line should not be shared by other circuits.

   c. The capacitance of the bypass capacitor should be as large as possible.

4. Oscillation remedies

   To prevent noise from sparks when using brush motors, a capacitor may be connected between both pins.
   When using TA7267BP, the capacitor is connected between output pins ③ and ⑤. This may cause oscillation.
   Therefore, avoid connecting the capacitor where possible. If connection is necessary to overcome noise, connect resistors in series as shown in the technical data.
   The values for the capacitor and resistors must be determined according to the motor. However, recommended values are about 0.1 μF and 33 Ω.

APPLICATION NOTE

(1) Input circuit

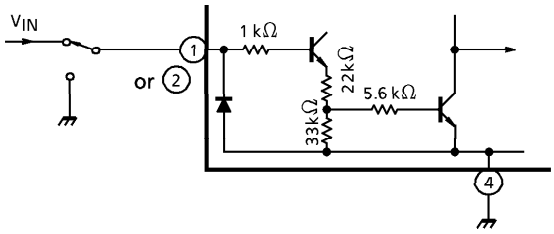

Fig.1

Input circuit is shown in Fig.1. It's a "High Active" type.
If a voltage above specified $V_{IN\,(H)}$ value fed into input terminal that means "Logic 1", and the voltage less than $V_{IN\,(L)}$ or connect to GND means "Logic 0".
And the circuit have a hysteresis for stable operation. (See Fig.2)

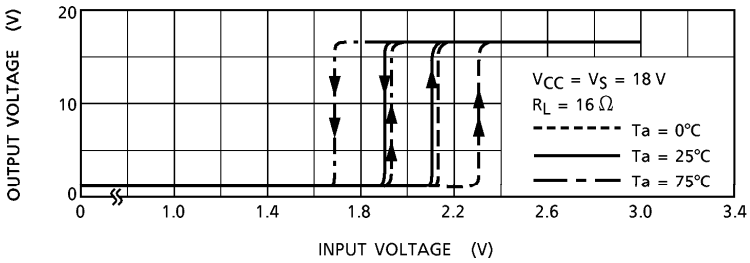

Fig.2 $V_{IN} - V_{OUT}$ characteristics

(2) Basic application circuit

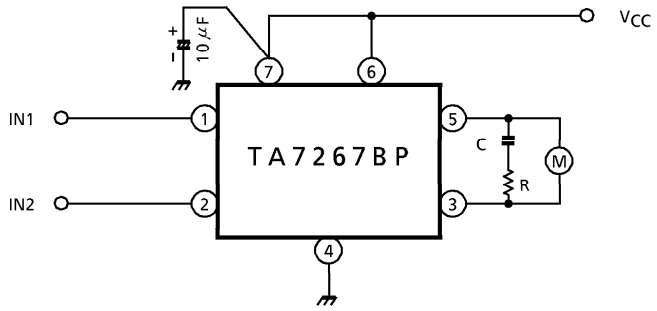

Fig.3

(Note 1) Fig.3 shows the basic application circuit.
Optimum values of the C, R depend on the inherent constant of a motor and parasitic C, R values around the circuit.

(Note 2) Utmost care is necessary in the design of the output line, V_S, V_{CC} and GND line since IC may be destroyed due to short-circuit between outputs, air contamination fault, or fault by improper grounding.

(Note 3) Be careful when switching the input because rush current may occur.
When switching, stop mode should be entered or current limitation resister R should be inserted.

(Note 4) The IC functions cannot be guaranteed when turning power on of off.
Before using the IC for application, check that there are no problems.

(3) Additional diode

i) If the braking operation is so loose, connect a additional diode between each output to GND. (See Fig.4)

ii) If the back electromotive pulse generated in output coil is so strong. Internally connected back electromotive suppression diode may be damaged by this pulse. In such a case connect a additional diode between each output to V_{CC}. (See Fig.5)

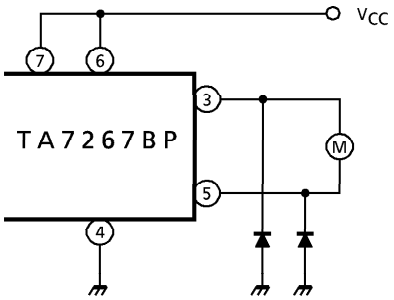

Fig.4

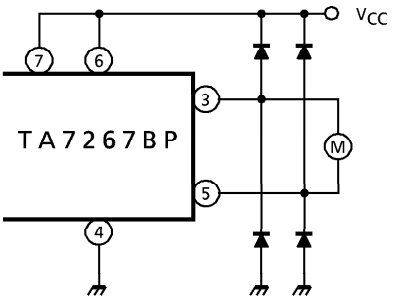

Fig.5

OUTLINE DRAWING

HSIP7-P-2.54A

Unit : mm

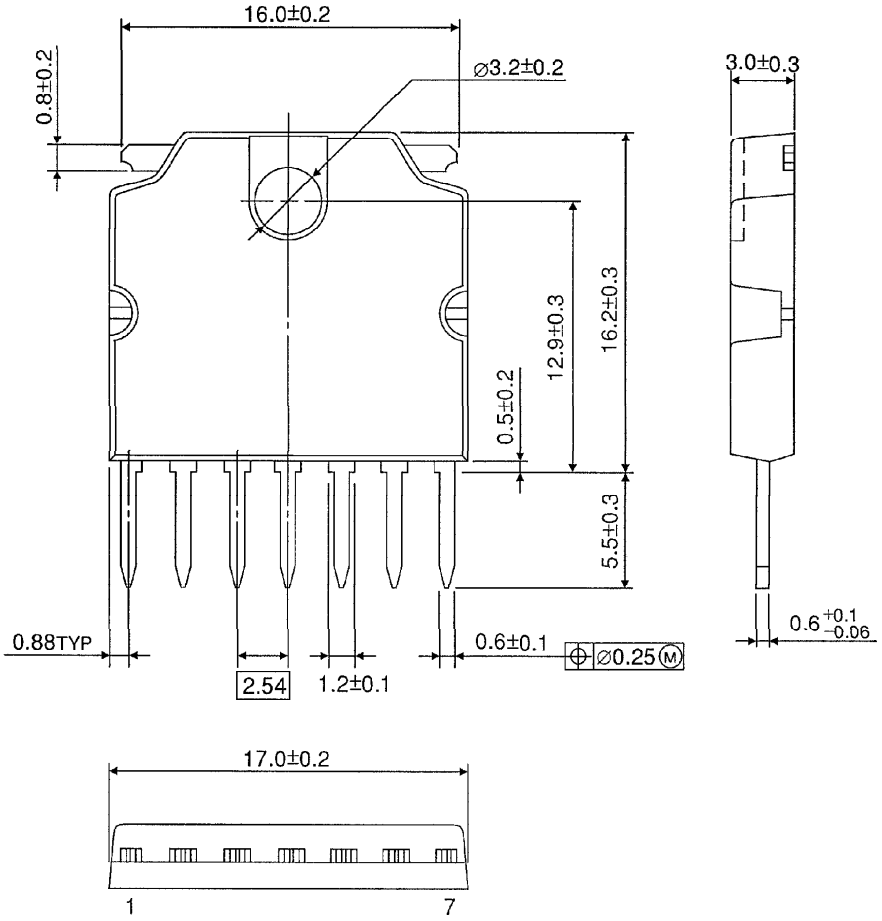

Weight : 2.15 g (Typ.)