TOSHIBA BIPOLAR LINEAR INTEGRATED CIRCUIT SILICON MONOLITHIC

TA75072P, TA75072S, TA75072F

DUAL OPERTIONAL AMPLIFIER

The TA75072P, TA75072S and TA75072F are J-FET input low-noise operational amplifiers with low input bias and offset current, fast slew rate and wide bandwidth.
The TA75072P is pin compatible with the TA75458P and 1458. The TA75072S is single-in-line package.
It is possible to exchange the position of 9 pin for 1 pin because of pin connection being symmetric.
The TA75072F is mini-flat package.
The TA75072P series are excellent choice for active filters, integrators, buffers and sample-and-hold circuits.

TA75072P

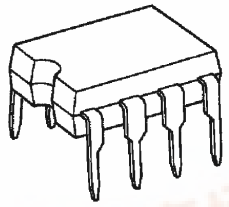

DIP8-P-300-2.54A

TA75072S

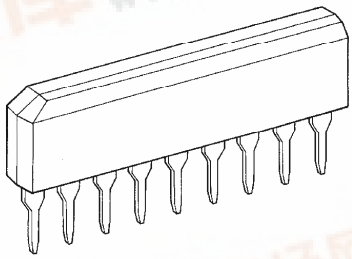

SIP9-P-2.54A

TA75072F

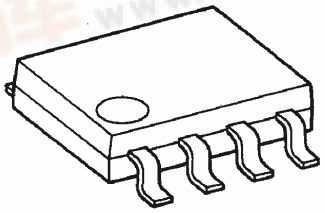

SOP8-P-225-1.27

Weight
DIP8-P-300-2.54A : 0.5g (Typ.)
SIP9-P-2.54A : 0.9g (Typ.)
SOP8-P-225-1.27 : 0.1g (Typ.)

FEATURES

- Low Input Bias Current : 200pA MAX.
- Low Input Offset Current : 50pA MAX.
- High Slew Rate : 13V / μs
- Low Noise : 18nV / $\sqrt{Hz}$
- Wide Bandwidth : 3MHz
- Wide Supply Voltage Range : ±4～±18V
- Internal Frequency Compensation
- Output Short Circuit Protection

961001EBA1

PIN CONNECTION (TOP VIEW)

TA75072P, TA75072F

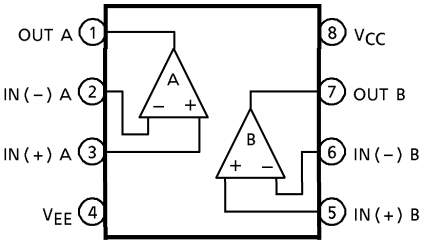

TA75072S

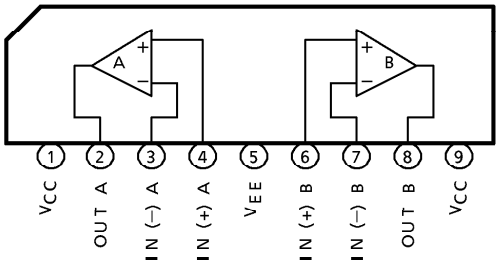

EQUIVALENT CIRCUIT

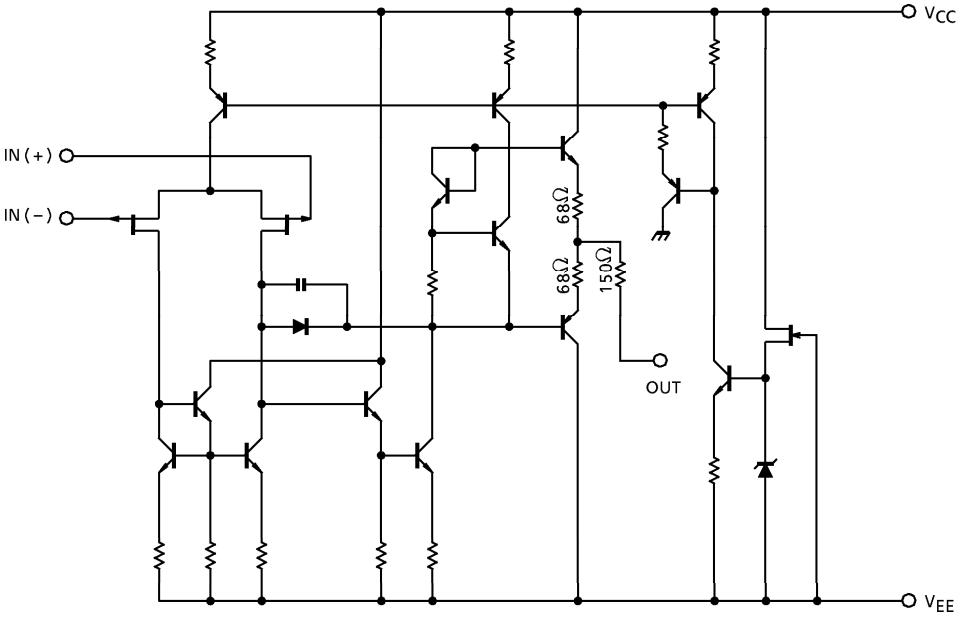

MAXIMUM RATINGS (Ta = 25°C)

CHARACTERISTIC		SYMBOL	RATING	UNIT
Supply Voltage		V_{CC}	+ 18	V
		V_{EE}	− 18	
Differential Input Voltage		DV_{IN}	± 30	V
Input Voltage		V_{IN}	± 15	V
Power Dissipation	TA75072P	P_D	500	mW
	TA75072S			
	TA75072F		240	
Operating Temperature		T_{opr}	− 40~85	°C
Storage Temperature		T_{stg}	− 55~125	°C

ELECTRICAL CHARACTERISTICS (V_{CC} = 15V, V_{EE} = − 15V, Ta = 25°C)

CHARACTERISTIC	SYMBOL	TEST CIR-CUIT	TEST CONDITION	MIN.	TYP.	MAX.	UNIT
Input Offset Voltage	V_{IO}	—	$R_g \leqq 10k\Omega$	—	3	10	mV
TC Of Input Offset Voltage	TCV_{IO}	—	—	—	10	—	μV / °C
Input Offset Current	I_{IO}	—	—	—	5	50	pA
Input Bias Current	I_I	—	—	—	30	200	pA
Common Mode Input Voltage	CMV_{IN}	—	—	± 11	± 12	—	V
Maximum Output Voltage	V_{OM}	—	$R_L = 10k\Omega$	24	—	—	V_{p-p}
	V_{OMR}	—	$R_L = 2k\Omega$	20	24	—	
Voltage Gain (Open Loop)	G_V	—	V_{OUT} = ± 10V, $R_L = 2k\Omega$	25	200	—	V / mV
Unity Gain Cross Frequency	f_T	—	Open Loop, $R_L = 10k\Omega$	—	3	—	MHz
Input Resistance	R_{IN}	—	—	—	10^{12}	—	Ω
Common Mode Input Signal Rejection Ratio	CMRR	—	$R_g \leqq 10k\Omega$	70	76	—	dB
Supply Voltage Rejection Ratio	SVRR	—	$R_g \leqq 10k\Omega$	70	76	—	dB
Supply Current	I_{CC}, I_{EE}	—	Non load	—	2.8	5.0	mA
Cross Talk		—	—	—	− 120	—	dB

OPERATING CHARACTERISTICS (V_{CC} = 15V, V_{EE} = − 15V, Ta = 25°C)

CHARACTERISTIC	SYMBOL	TEST CIR-CUIT	TEST CONDITION		MIN.	TYP.	MAX.	UNIT
Slew Rate	SR	—	$V_{IN} = 10V_{p-p}$, $R_L = 2k\Omega$ $C_L = 100pF$		—	13	—	V / μs
Equivalent Input Noise Voltage	V_{NI}	—	$R_S = 100\Omega$	f = 1kHz	—	18	—	nV / √Hz
				f = 10Hz~10kHz	—	4	—	μV_{rms}
Equivalent Input Noise Current	I_{NI}	—	$R_S = 100\Omega$, f = 1kHz		—	0.01	—	pA / √Hz
Total Harmonic Distortion	THD	—	$V_{OUT} = 10V_{rms}$, $R_S \leqq 1k\Omega$ $R_L \geqq 2k\Omega$, f = 1kHz		—	0.01	—	%

CHARACTERISTICS

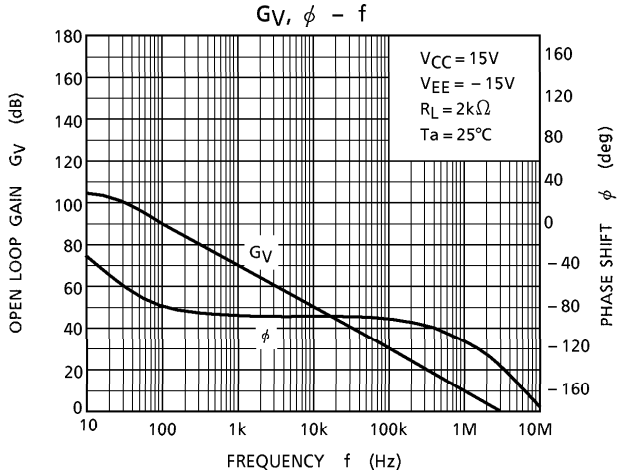

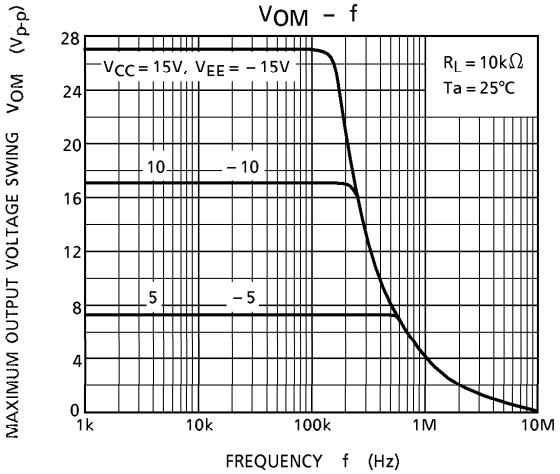

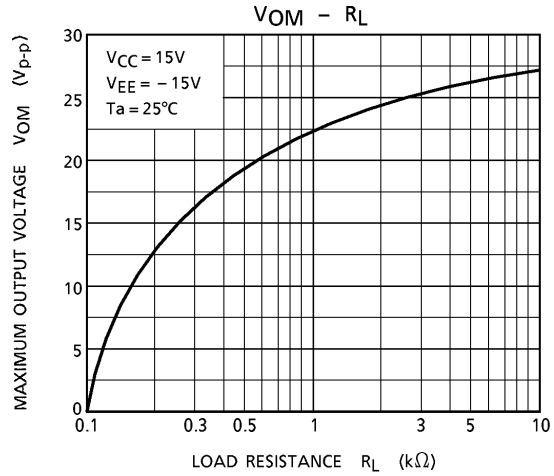

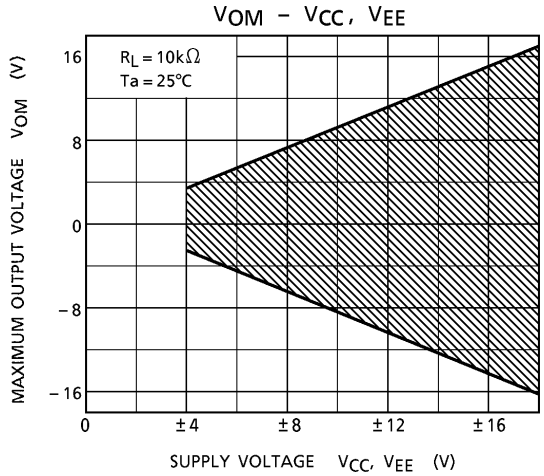

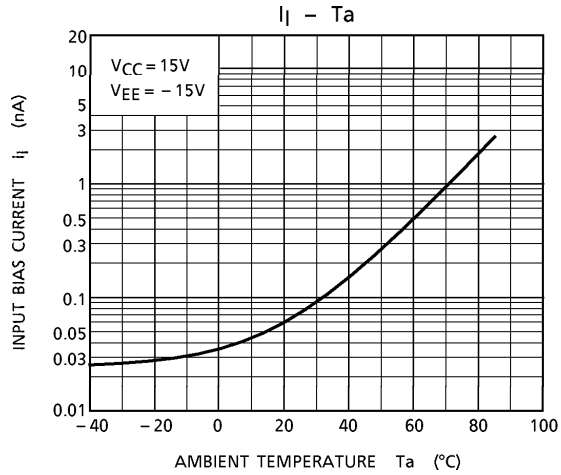

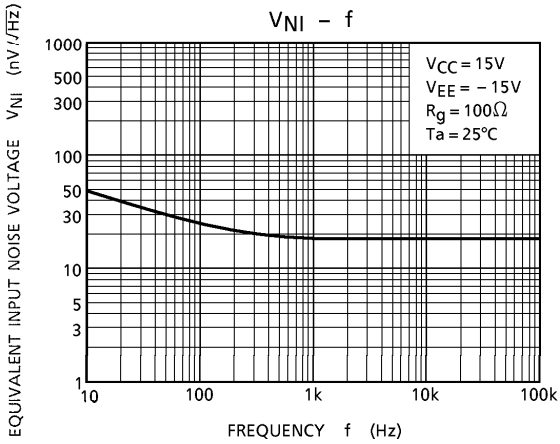

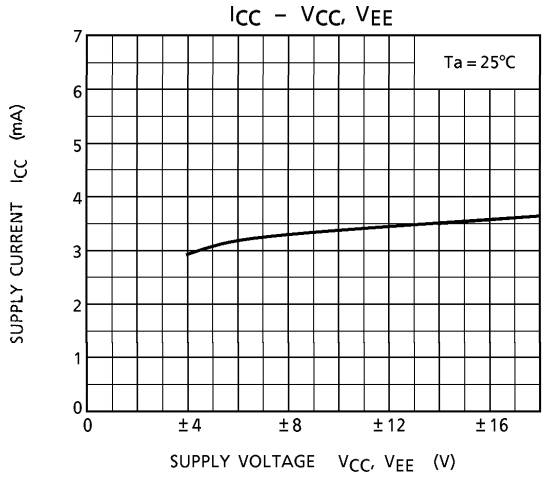
ICC – VCC, VEE
Ta = 25°C
SUPPLY CURRENT ICC (mA)
0
1
2
3
4
5
6
7
0
±4
±8
±12
±16
SUPPLY VOLTAGE VCC, VEE (V)

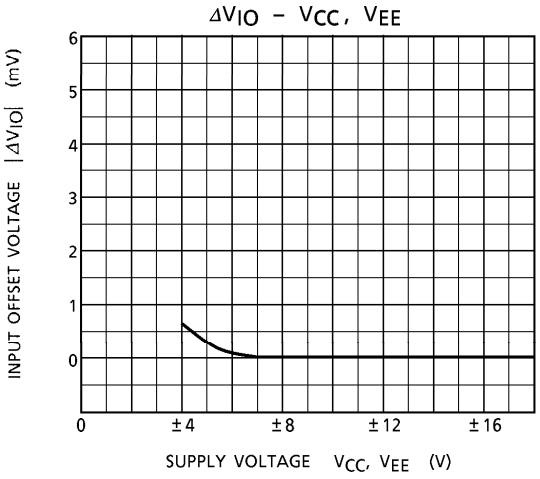
ΔVIO – VCC, VEE
INPUT OFFSET VOLTAGE |ΔVIO| (mV)
0
1
2
3
4
5
6
0
±4
±8
±12
±16
SUPPLY VOLTAGE VCC, VEE (V)

OUTLINE DRAWING

DIP8-P-300-2.54A

Unit : mm

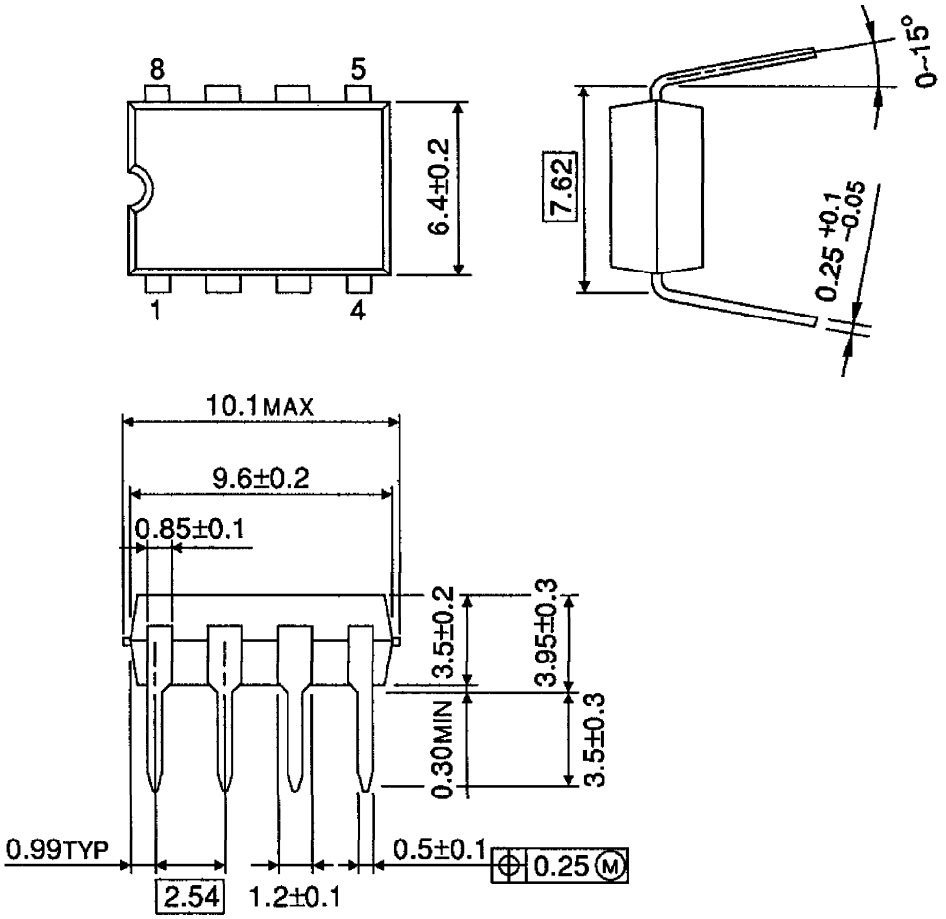

Weight : 0.5g (Typ.)

OUTLINE DRAWING

SIP9-P-2.54A

Unit : mm

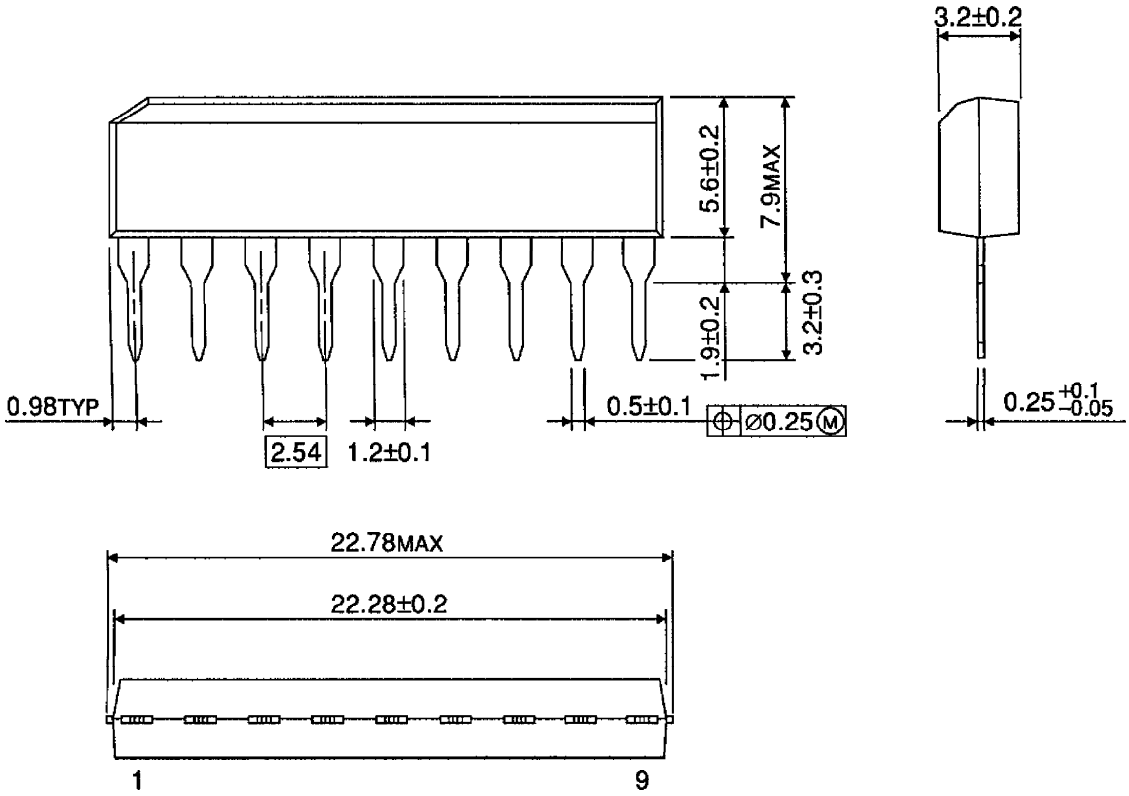

Weight : 0.9g (Typ.)

OUTLINE DRAWING

SOP8-P-225-1.27

Unit : mm

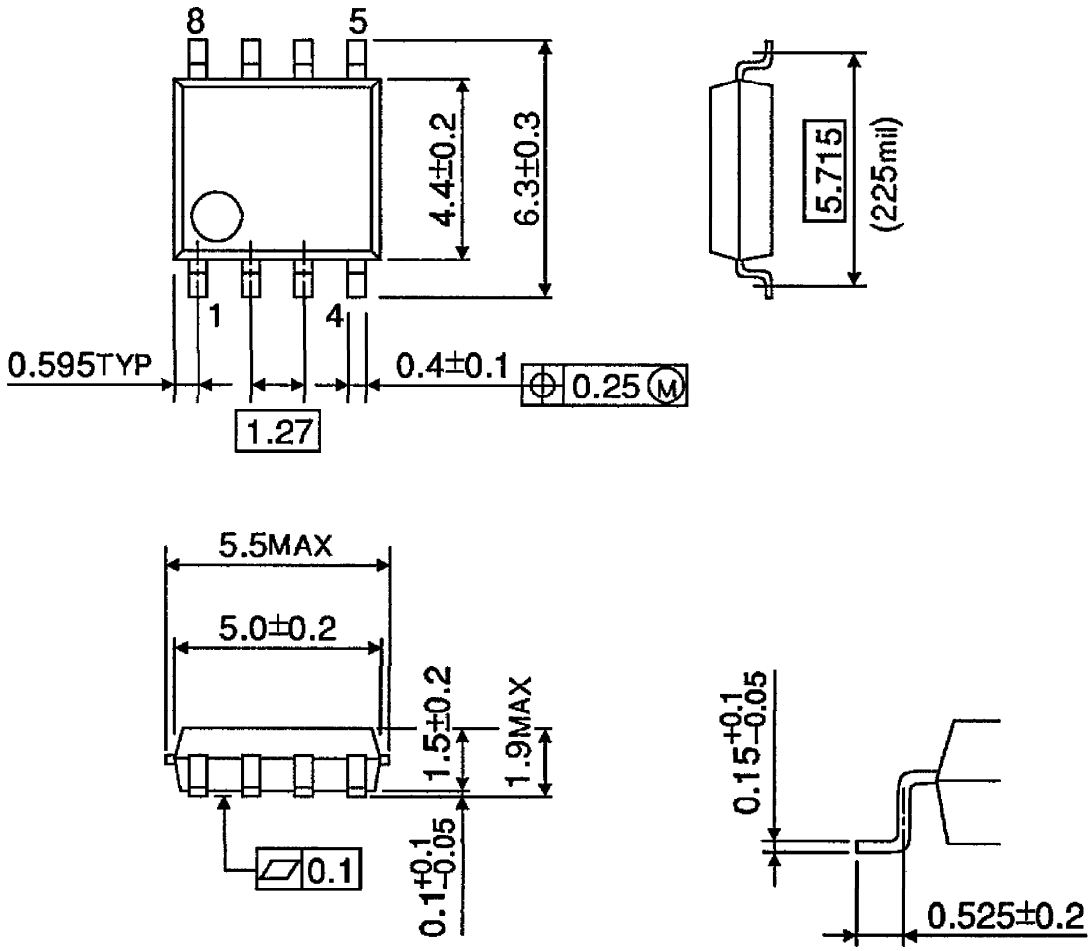

Weight : 0.1g (Typ.)