查询TA75558F供应商 捷多邦，专业PCB打样工厂，24小时加急出货

TOSHIBA BIPOLAR LINEAR INTEGRATED CIRCUIT SILICON MONOLITHIC

TA75558P, TA75558S, TA75558F

DUAL OPERATIONAL AMPLIFIER

The TA75558P, TA75558S and TA75558F are Low-Noise Operational Amplifiers with High Speed and Wide Bandwidth.

FEATURES

- Internal Frequency Compensation Type
- Pin Compatible with TA75458P, TA75458S and TA75458F
- Possible to Exchange the Position of 9 Pin for 1 Pin Because of Pin Connection Being Symmetric. (TA75558S Device Only)
- Wide Band Range : $f_T = 3MHz$ (Typ.)
- Suitable Application for Active Filter Equalizer Amplifier and Headphone Amplifier.

TA75558P

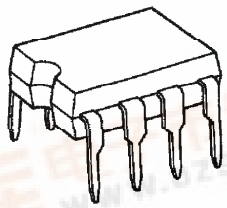

DIP8-P-300-2.54A

TA75558S

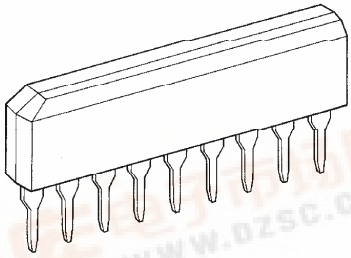

SIP9-P-2.54A

TA75558F

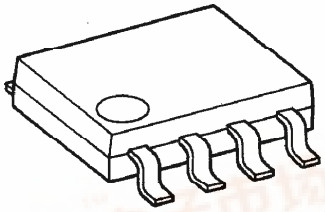

SOP8-P-225-1.27

Weight
DIP8-P-300-2.54A : 0.5g (Typ.)
SIP9-P-2.54A : 0.9g (Typ.)
SOP8-P-225-1.27 : 0.1g (Typ.)

961001EBA1

● TOSHIBA is continually working to improve the quality and the reliability of its products. Nevertheless, semiconductor devices in general can malfunction or fail due to their inherent electrical sensitivity and vulnerability to physical stress. It is the responsibility of the buyer, when utilizing TOSHIBA products, to observe standards of safety, and to avoid situations in which a malfunction or failure of a TOSHIBA product could cause loss of human life, bodily injury or damage to property. In developing your designs, please ensure that TOSHIBA products are used within specified operating ranges as set forth in the most recent products specifications. Also, please keep in mind the precautions and conditions set forth in the TOSHIBA Semiconductor Reliability Handbook.
● The products described in this document are subject to foreign exchange and foreign trade control laws.
● The information contained herein is presented only as a guide for the applications of our products. No responsibility is assumed by TOSHIBA CORPORATION for any infringements of intellectual property or other rights of the third parties which may result from its use. No license is granted by implication or otherwise under any intellectual property or other rights of TOSHIBA CORPORATION or others.
● The information contained herein is subject to change without notice.

PIN CONNECTION (TOP VIEW)

TA75558F

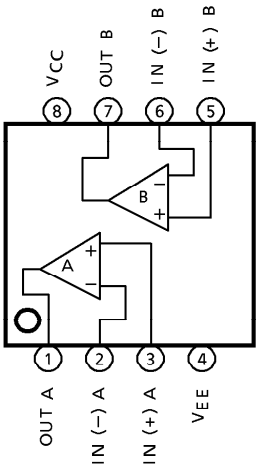

TA75558P

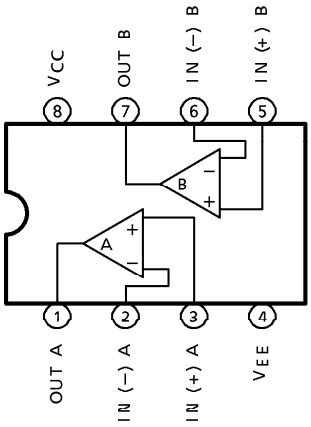

TA75558S

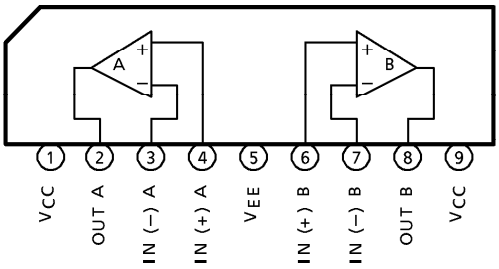

EQUIVALENT CIRCUIT

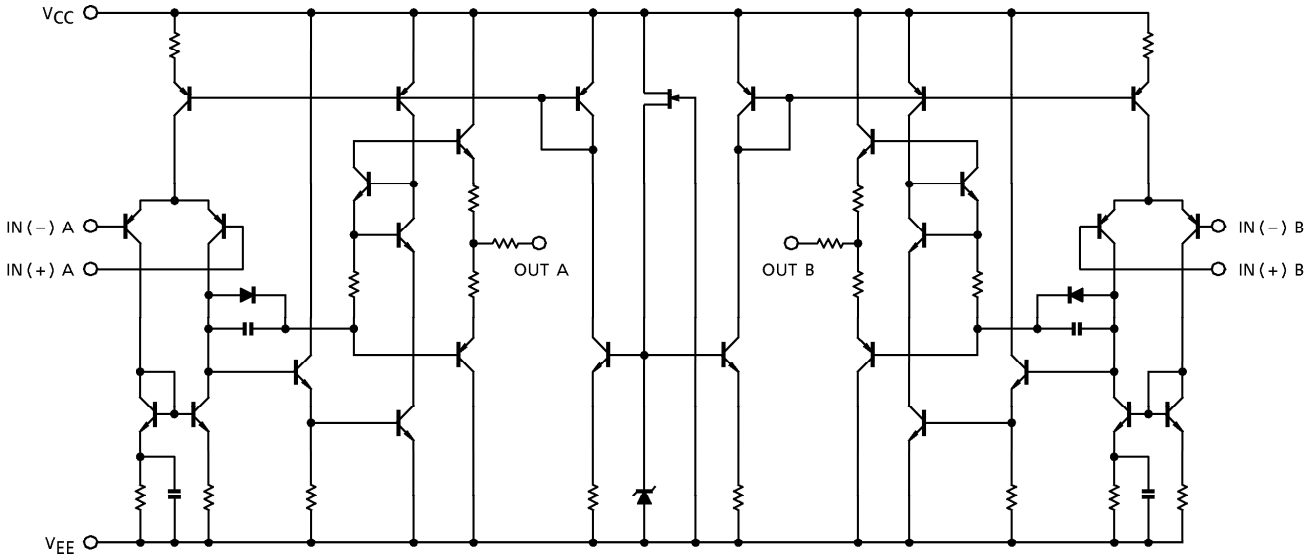

MAXIMUM RATINGS (Ta = 25°C)

CHARACTERISTIC	SYMBOL	TA75558P TA75558S	TA75558F	UNIT
Supply Voltage	V_{CC}	+ 18	+ 18	V
	V_{EE}	− 18	− 18	
Differential Input Voltage	DV_{IN}	± 30	± 30	V
Input Voltage	V_{IN}	V_{CC}~V_{EE}	V_{CC}~V_{EE}	V
Power Dissipation	P_D	500	240	mW
Operating Temperature	T_{opr}	− 40~85	− 30~70	°C
Storage Temperature	T_{stg}	− 55~125	− 55~125	°C

ELECTRICAL CHARACTERISTICS (V_{CC} = 15V、V_{EE} = − 15V、Ta = 25°C)

CHARACTERISTIC	SYMBOL	TEST CIR-CUIT	TEST CONDITION	MIN.	TYP.	MAX.	UNIT
Input Offset Voltage	V_{IO}	1	$R_g \leqq 10k\Omega$	—	0.5	6	mV
Input Offset Current	I_{IO}	2	—	—	5	200	nA
Input Bias Current	I_I	2	—	—	60	500	nA
Common Mode Input Voltage	CMV_{IN}	3	—	± 12	± 14	—	V
Maximum Output Voltage	V_{OM}	6	$R_L = 10k\Omega$	± 12	± 14	—	V
	V_{OMR}		$R_L = 2k\Omega$	± 10	± 13	—	
Source Current	I_{source}	8	—	—	40	—	mA
Sink Current	I_{sink}	7	—	—	40	—	mA
Voltage Gain (Open Loop)	G_V	5	V_{OUT} = ± 10V, $R_L = 2k\Omega$	86	100	—	dB
Common Mode Input Signal Rejection Ratio	CMRR	3	$R_g \leqq 10k\Omega$	70	90	—	dB
Supply Voltage Rejection Ratio	SVRR	1	$R_g \leqq 10k\Omega$	—	30	150	μV / V
Slew Rate	SR	9	$G_V = 1$, $R_L = 2k\Omega$	—	1.0	—	V / μs
Unity Gain Cross Frequency	f_T	5	Open Loop	—	3.0	—	MHz
Supply Current	I_{CC}, I_{EE}	4	—	—	4.0	6.0	mA
Equivalent Input Noise Voltage	V_{NI}	—	$R_S = 1k\Omega$, f = 30Hz~30kHz	—	2.5	—	μV_{rms}

TEST CIRCUIT

(1) V_{IO}, S_{VRR}

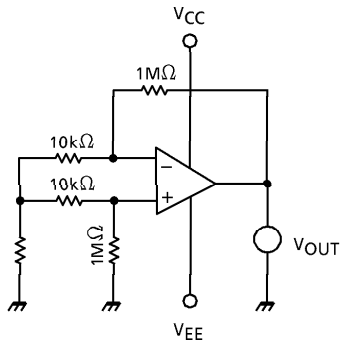

- $V_{IO} = V_{OUT} / 100$
- $SVRR = 20\ell og\ E\ (dB)$

$$E = \left| \frac{V_{OUT1} - V_{OUT2}}{(V_{CC1} - V_{EE1}) - (V_{CC2} - V_{EE2})} \right| \times \frac{1}{100}$$

V_{OUT1} : V_{OUT} (V_{CC}, $V_{EE} = \pm 8V$)
V_{OUT2} : V_{OUT} (V_{CC}, $V_{EE} = \pm 18V$)
V_{CC1} : $V_{CC} = -8V$
V_{EE1} : $V_{EE} = -8V$
V_{CC2} : $V_{CC} = +18V$
V_{EE2} : $V_{EE} = -18V$

(2) I_I, I_{IO}

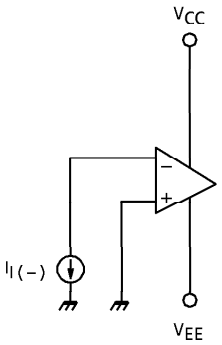

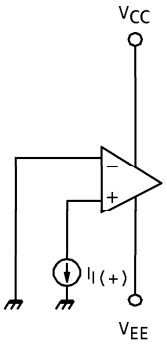

$I_{IO} = |I_I(-) - I_I(+)|$

(3) CMV_{IN}, CMRR

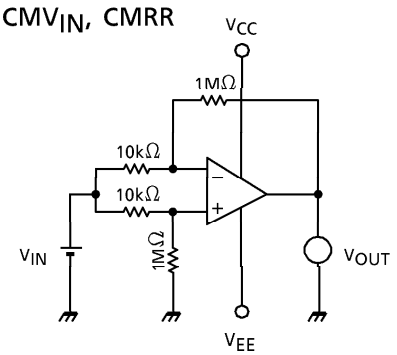

- $CMRR = 20\ell og\ G_D / G_C\ (dB)$
  G_D : DIFFERENTIAL VOLTAGE GAIN
  G_C : COMMON MODE VOLTAGE GAIN
- CMV_{IN} : $V_{IN} = -12V$, 12V SUPPLIES

(4) I_{CC}

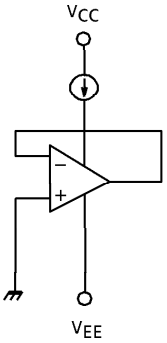

- I_{CC} : V_{CC}, $V_{EE} = \pm 15V$

(5) G_V, f_T

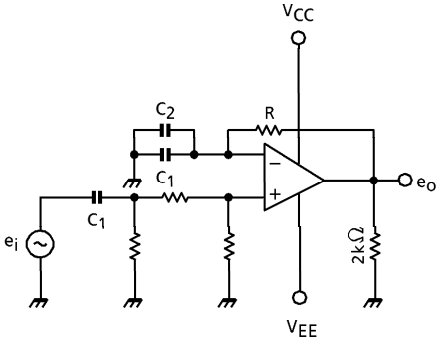

- $G_V = 20\ell og\ e_o / e_i$ (dB)
  $R \gg 1 / W_{C1}$
  C_1 : COUPLING CONDENSER
  C_2 : HIGH FREQUENCY BYPASS CONDENSER
- f_T : INPUT FREQUENCY AT $e_i = e_o$

(6) V_{OM}, V_{OMR}

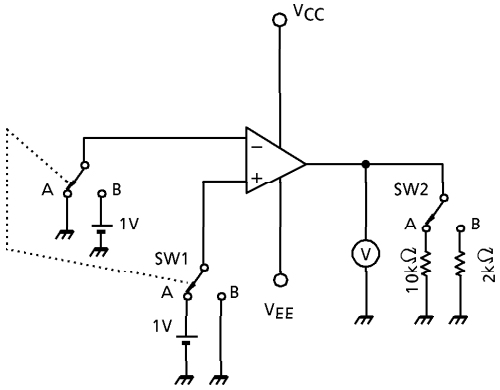

- V_{OM} : (+) : SW1 IS SIDE A, SW2 IS SIDE A
  (−) : SW1 IS SIDE B, SW2 IS SIDE A
- V_{OMR} : (+) : SW1 IS SIDE A, SW2 IS SIDE B
  (−) : SW1 IS SIDE B, SW2 IS SIDE B

(7) I_{sink}

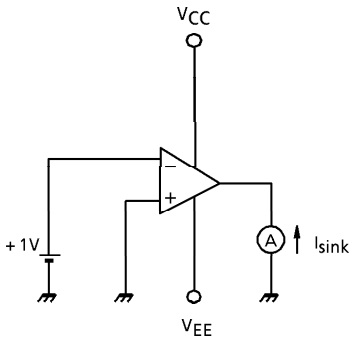

(8) I_{source}

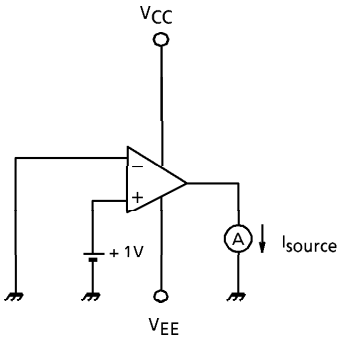

(9) SR

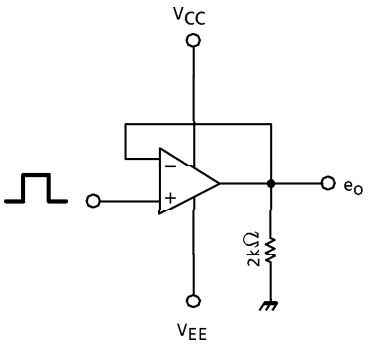

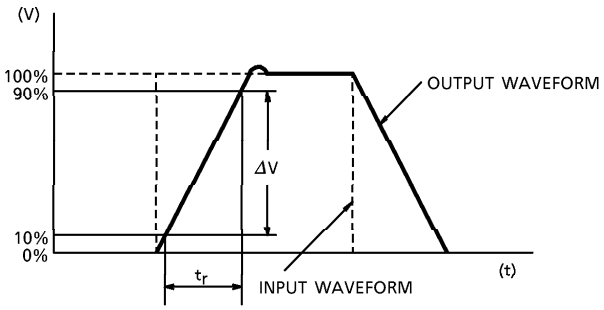

CHARACTERISTIC

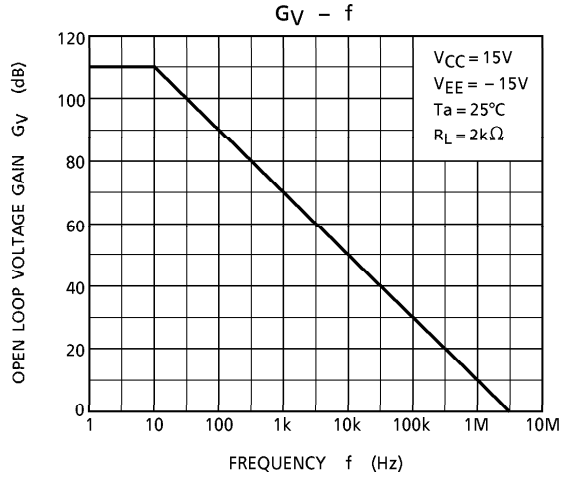

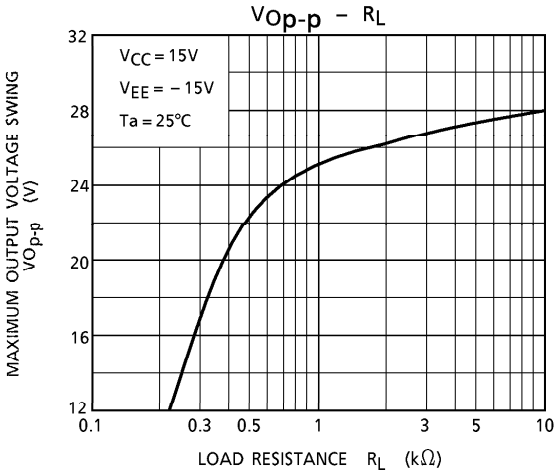

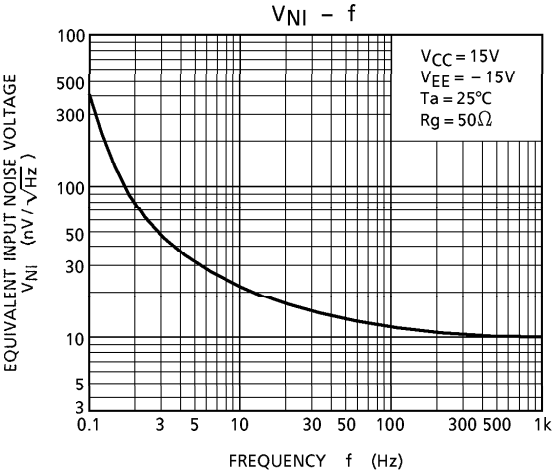

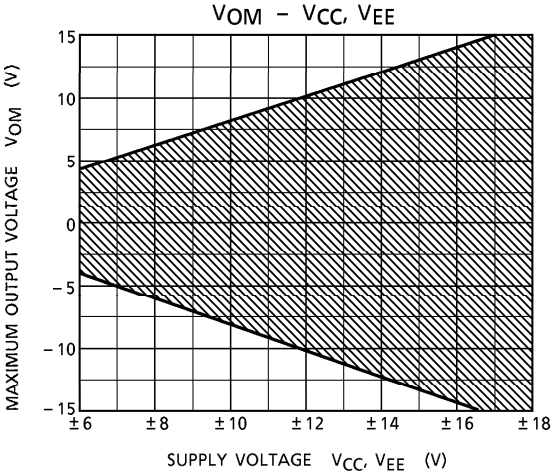

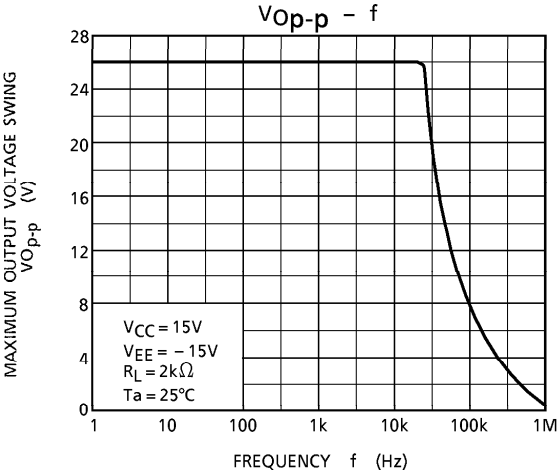

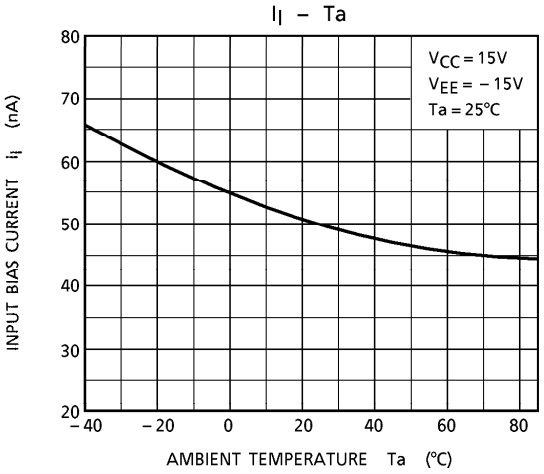

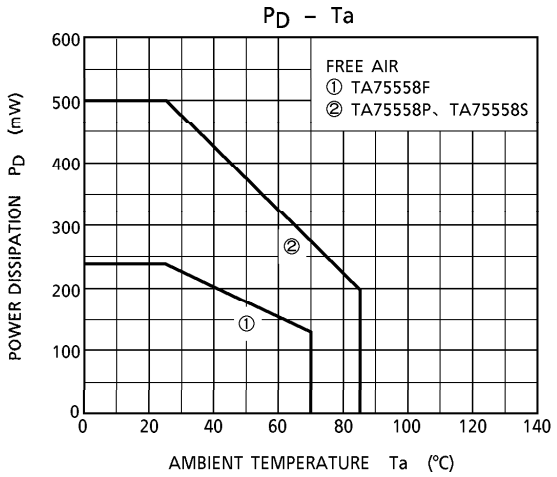
PD – Ta
FREE AIR
① TA75558F
② TA75558P、TA75558S
POWER DISSIPATION PD (mW)
600
500
400
300
200
100
0
0
20
40
60
80
100
120
140
AMBIENT TEMPERATURE Ta (°C)

OUTLINE DRAWING

DIP8-P-300-2.54A

Unit : mm

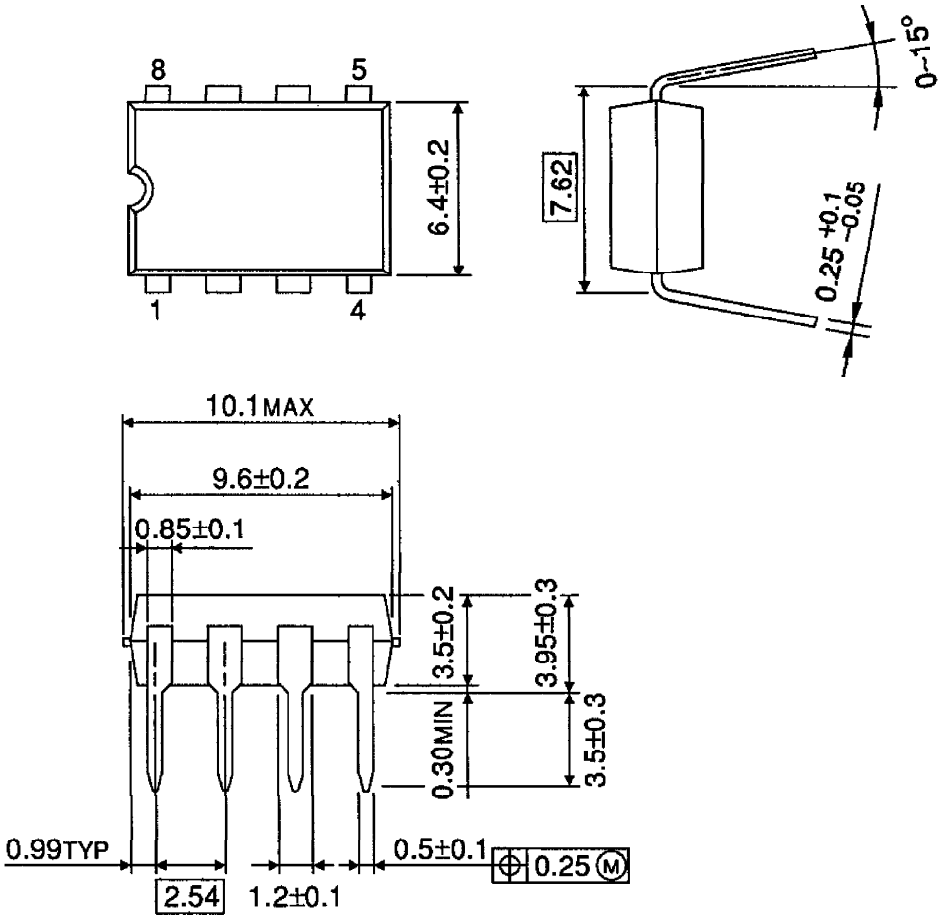

Weight : 0.5g (Typ.)

OUTLINE DRAWING

SIP9-P-2.54A

Unit : mm

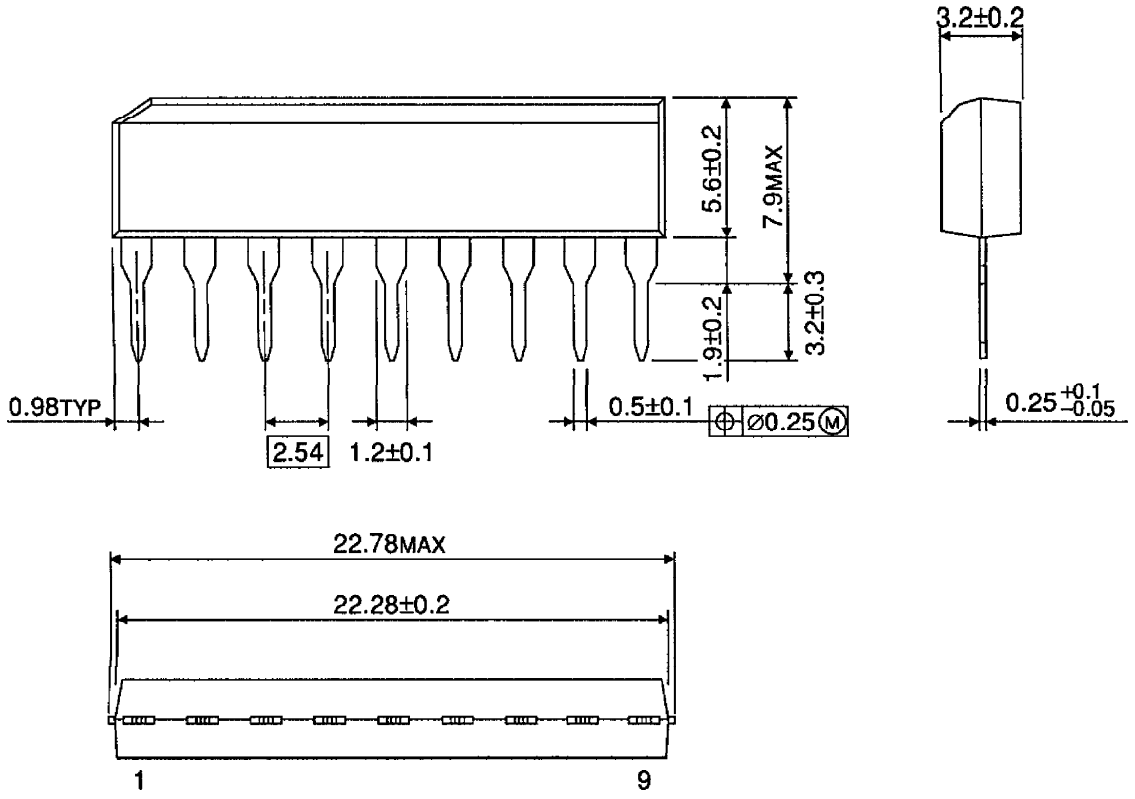

Weight : 0.9g (Typ.)

OUTLINE DRAWING

SOP8-P-225-1.27

Unit : mm

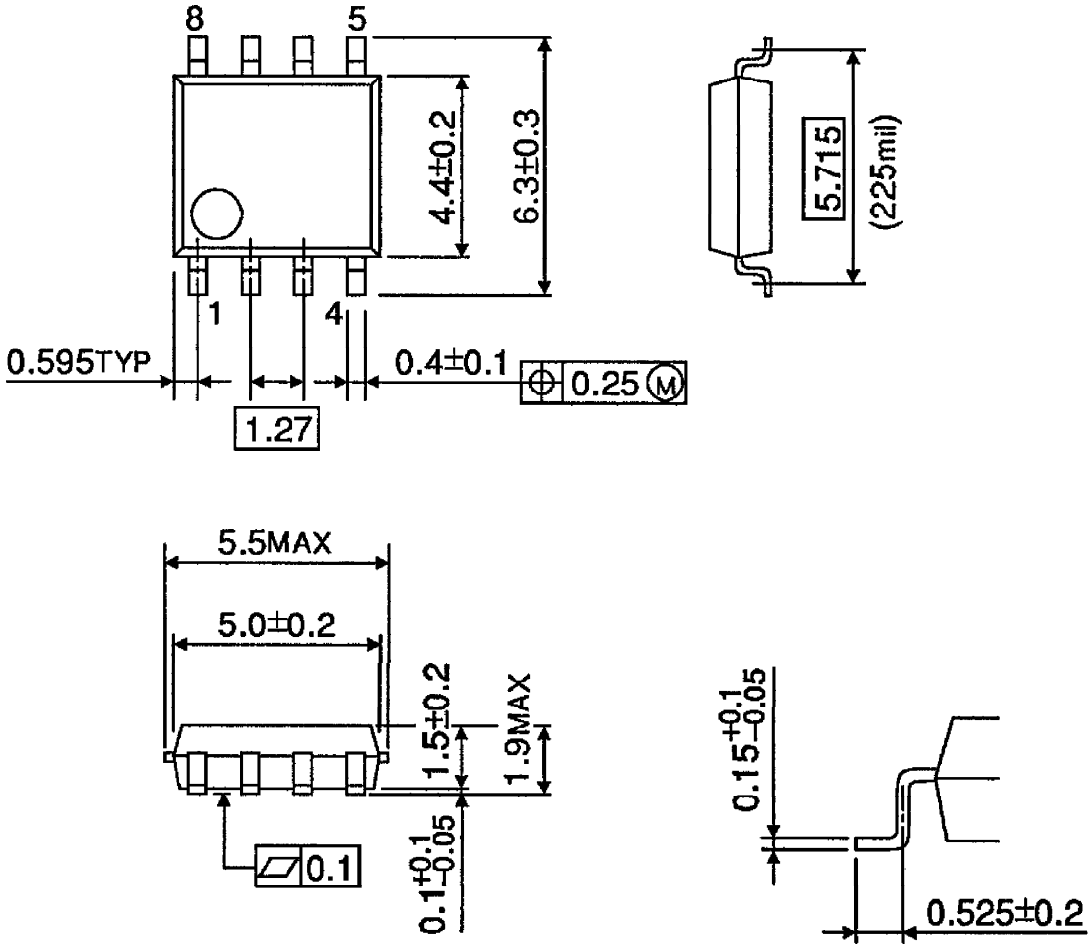

Weight : 0.1g (Typ.)