TOSHIBA BIPOLAR LINEAR INTEGRATED CIRCUIT SILICON MONOLITHIC

TA8405S

DUAL BRIDGE DRIVER

TA8405S is Dual Bridge Driver designed especially for VCR cassette and tape loading motor drives.

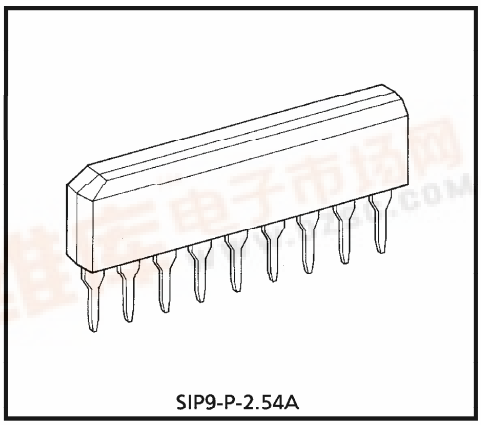

Weight : 0.92g (Typ.)

FEATURES

- 4 modes available (CW / CCW / STOP / BRAKE)
- Output current up to 0.4A (AVE.) and 1.0A (PEAK)
- Wide range of operating voltage : $V_{CC\ (opr)} = 4.5 \sim 22V$
  $V_{S\ (opr)} = 0 \sim 22V$
- Built-in thermal shutdown, over current protector and Punch-through current restriction circuit.
- Hysteresis for all inputs.

BLOCK DIAGRAM

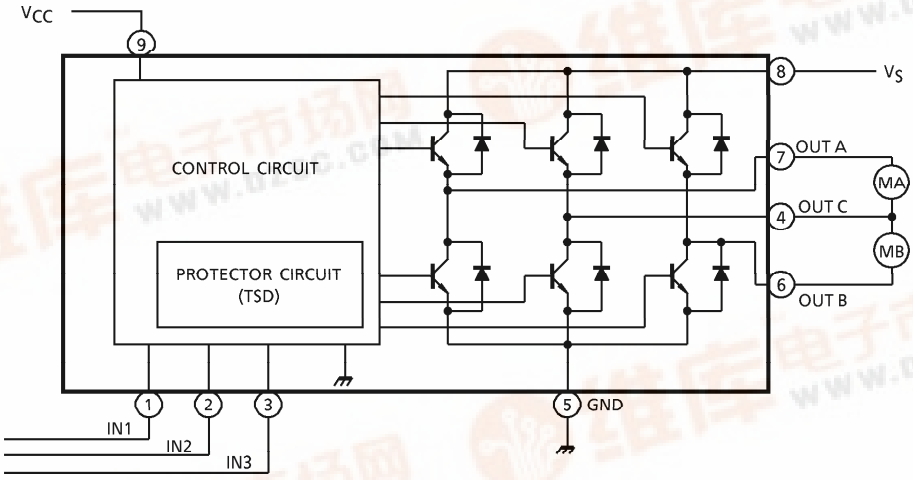

PIN FUNCTION

PIN No.	SYMBOL	FUNCTIONAL DESCRIPTION
1	IN1	Input terminal
2	IN2	Input terminal
3	IN3	Input terminal
4	OUT C	Output terminal
5	GND	GND terminal
6	OUT B	Output terminal
7	OUT A	Output terminal
8	V_S	Supply voltage terminal for motor drive
9	V_{CC}	Supply voltage terminal for logic

FUNCTION SPECIFICATION

(1) Input circuit

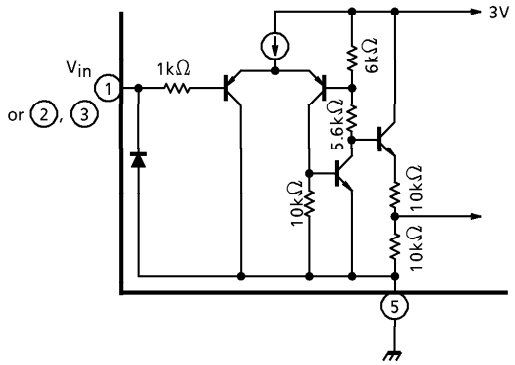

(2) Output circuit

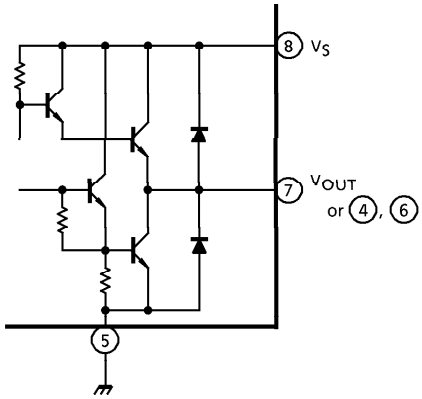

FUNCTION

INPUT			OUTPUT			MODE	
IN1	IN2	IN3	OUT C	OUT A	OUT B	MA	MB
0	0	1 / 0	∞	∞	∞	STOP	STOP
1	0	0	H	L	∞	CW / CCW	STOP
1	0	1	L	H	∞	CCW / CW	STOP
0	1	0	H	∞	L	STOP	CW / CCW
0	1	1	L	∞	H	STOP	CCW / CW
1	1	1 / 0	L	L	L	BRAKE	BRAKE

(∞) High impedance
(Note) Inputs are all low active type

MAXIMUM RATINGS (Ta = 25°C)

CHARACTERISTIC		SYMBOL	RATING	UNIT
Supply Voltage		V_{CC}	25	V
Motor Drive Voltage		V_S	25	V
Output Current	PEAK	I_O (PEAK)	1.0 (Note 1)	A
	AVE.	I_O (AVE.)	0.4	
Power Dissipation		P_D	0.75 (Note 2)	W
Operating Temperature		T_{opr}	−30~75	°C
Storage Temperature		T_{stg}	−55~150	°C

(Note 1) Duty 1/10, 100ms
(Note 2) No heat sink

ELECTRICAL CHARACTERISTICS (Unless otherwise specified, Ta = 25°C, V_{CC} = 12V, V_S = 12V)

CHARACTERISTIC		SYMBOL	TEST CIR-CUIT	TEST CONDITION	MIN.	TYP.	MAX.	UNIT
Supply Current		I_{CC1}	1	Output open, CW/CCW mode	—	7	15	mA
		I_{CC2}	1	Output open, BRAKE mode	—	15	38	
		I_{CC3}	1	Output open, STOP mode	—	7	15	
Input Operating Voltage	1 (High)	V_{IN1}	2	—	3.5	—	5.5	V
	2 (Low)	V_{IN2}	2	—	GND	—	1.2	
Input Current		I_{IN}	2	V_{IN} = GND, source mode	—	4	60	μA
Input Hysteresis Voltage		ΔV_T	2	—	—	1.5	—	V
Output Saturation Voltage	Upper	$V_{SAT\ U-1}$	3	I_O = 0.4A, V_{OUT}-V_S measure	—	1.0	1.4	V
	Lower	$V_{SAT\ L-1}$	3	I_O = 0.4A V_{OUT}-GND measure	—	0.8	1.2	
	Upper	$V_{SAT\ U-2}$	3	V_{OUT}-V_S measure I_O = 1.0A, ON LOAD : 20ms	—	1.3	2.3	
	Lower	$V_{SAT\ L-2}$	3	V_{OUT}-GND measure I_O = 1.0A, ON LOAD : 20ms	—	1.0	1.5	
Output Transistor Leakage Current	Upper	$I_{L\ U}$	5	V_S = 25V	—	—	50	μA
	Lower	$I_{L\ L}$	5	V_S = 25V	—	—	50	
Diode Forward Voltage	Upper	$V_{F\ U}$	4	I_F = 1.0A	—	2.1	—	V
	Lower	$V_{F\ L}$	4	I_F = 1.0A	—	1.6	—	
Thermal Shut Down Operating Temperature		T_{SD}	—	T_j	—	130	—	°C

TEST CIRCUIT 1

$I_{CC1, 2, 3}$

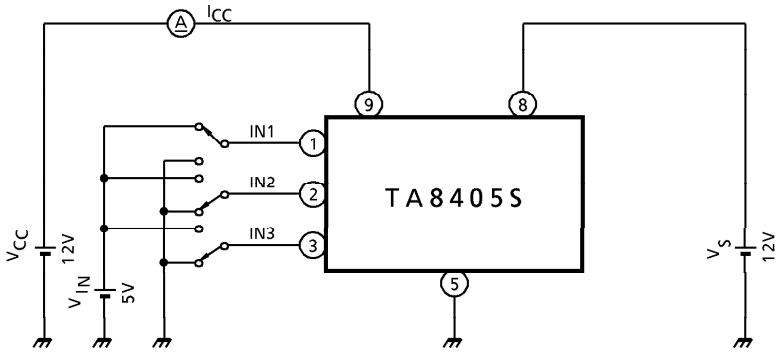

TEST CIRCUIT 2

$V_{IN1, 2}$, I_{IN}, ΔV_T

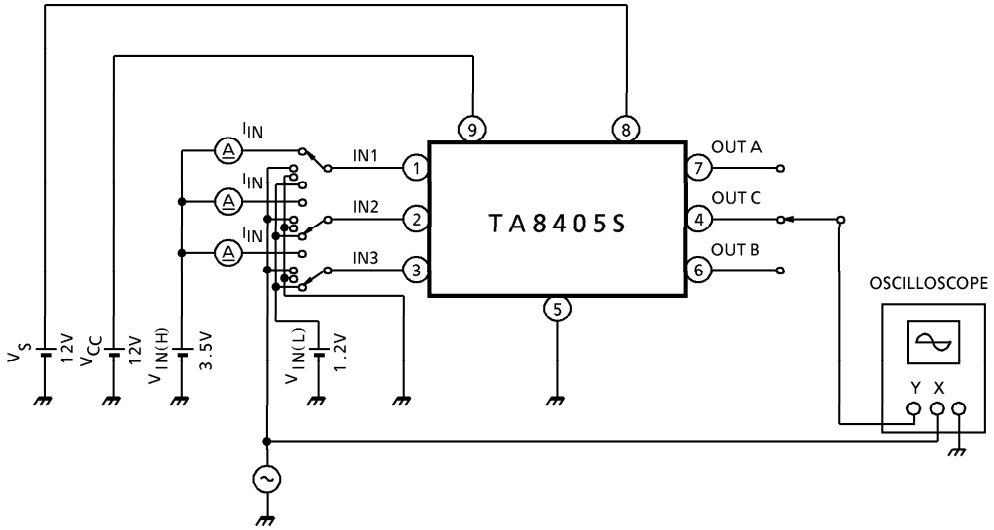

TEST CIRCUIT 3

$V_{SAT\ U-1,\ L-1,\ U-2,\ L-2}$

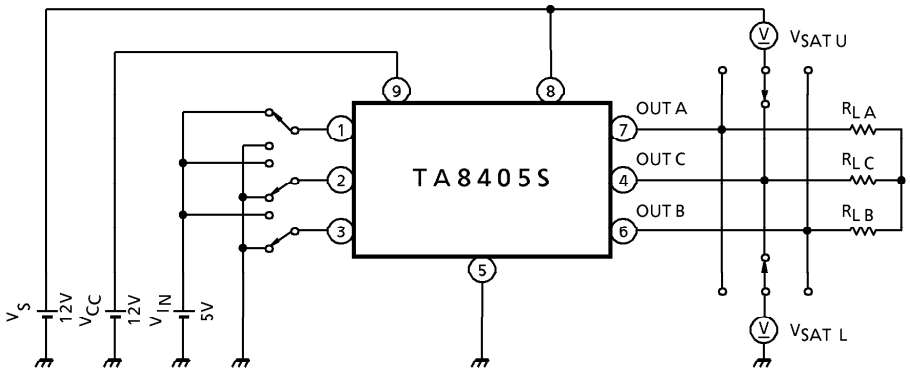

TEST CIRCUIT 4

$V_{F\ U,\ L}$

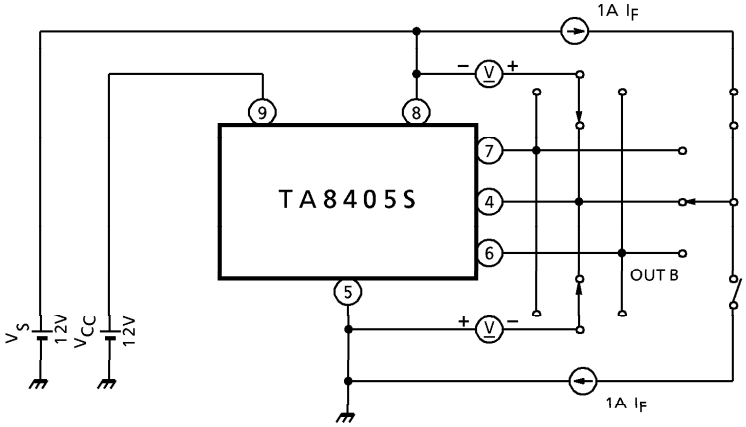

TEST CIRCUIT 5

$I_{L\ U,\ L}$

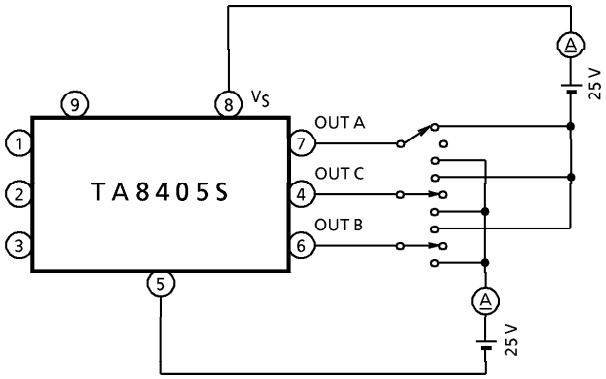

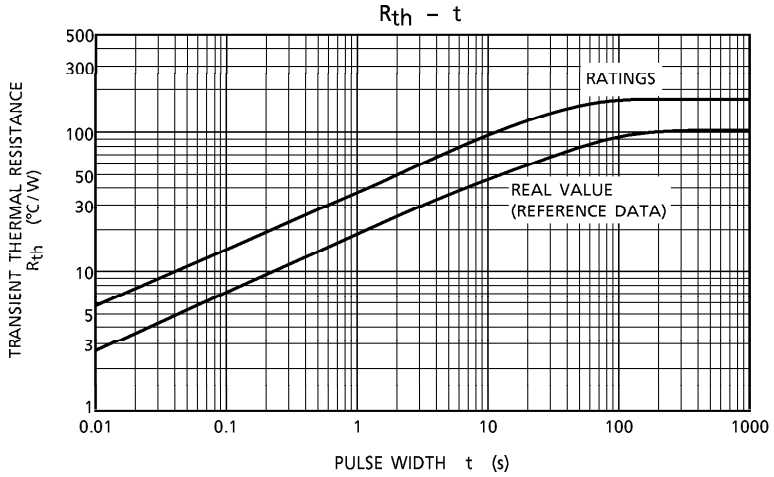
Rth – t
TRANSIENT THERMAL RESISTANCE Rth (°C/W)
500
300
100
50
30
10
5
3
1
0.01
0.1
1
10
100
1000
PULSE WIDTH t (s)
RATINGS
REAL VALUE
(REFERENCE DATA)

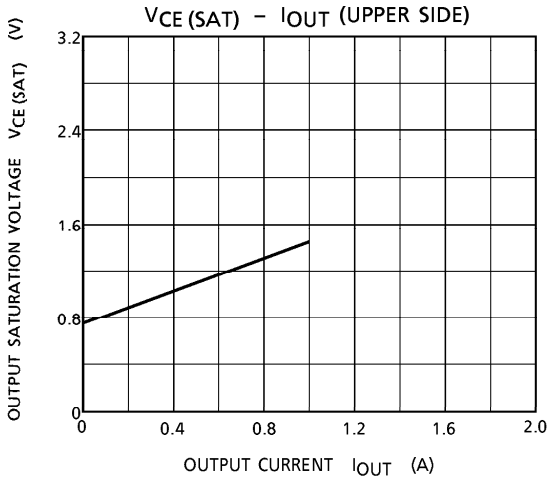
VCE (SAT) – IOUT (UPPER SIDE)
OUTPUT SATURATION VOLTAGE VCE (SAT) (V)
3.2
2.4
1.6
0.8
0
0
0.4
0.8
1.2
1.6
2.0
OUTPUT CURRENT IOUT (A)

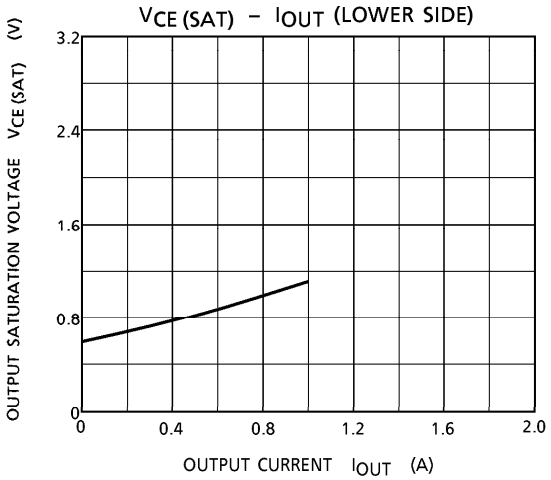
VCE (SAT) – IOUT (LOWER SIDE)
OUTPUT SATURATION VOLTAGE VCE (SAT) (V)
3.2
2.4
1.6
0.8
0
0
0.4
0.8
1.2
1.6
2.0
OUTPUT CURRENT IOUT (A)

OUTLINE DRAWING

SIP9-P-2.54A

Unit : mm

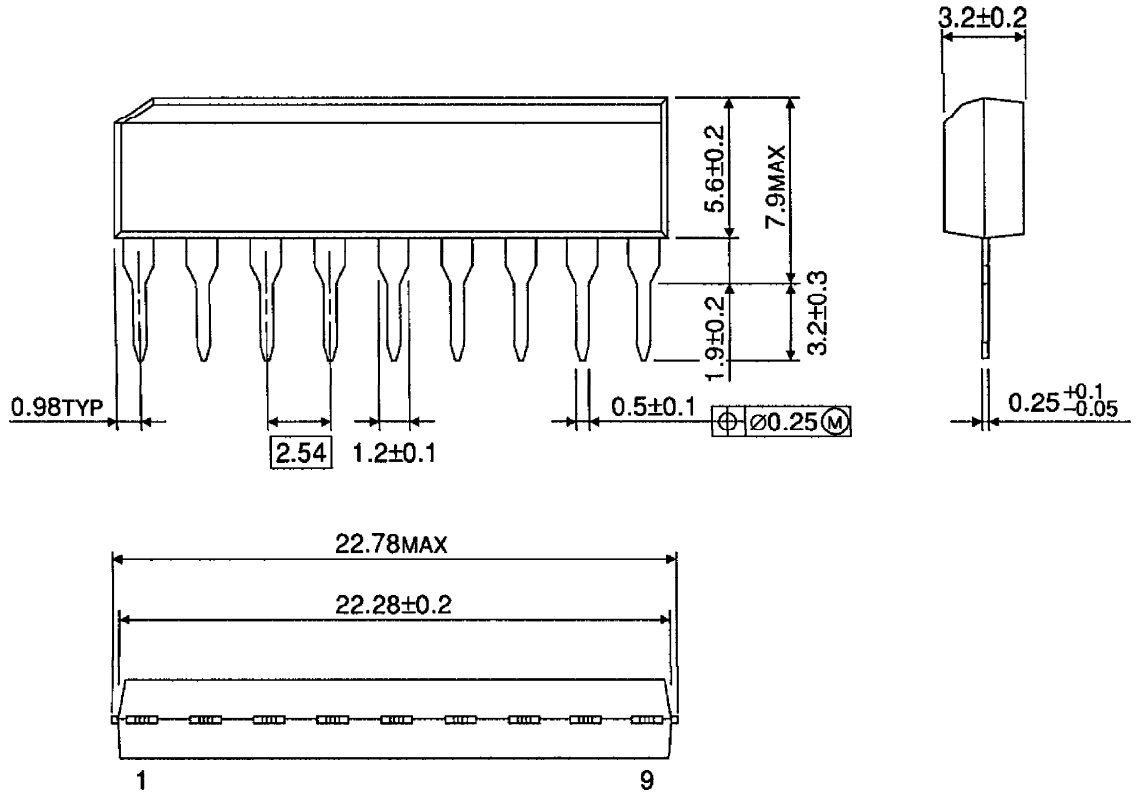

Weight : 0.92g (Typ.)