TOSHIBA BIPOLAR LINEAR INTEGRATED CIRCUIT SILICON MONOLITHIC

TA8415P

STEPPING MOTOR CONTROLLER / DRIVER

The TA8415P is general purpose unipolar stepping motor controller / driver, applicable to 3 / 4 phase motors and 1, 1-2, 2 phase excitation drive by initial setting of control terminals.

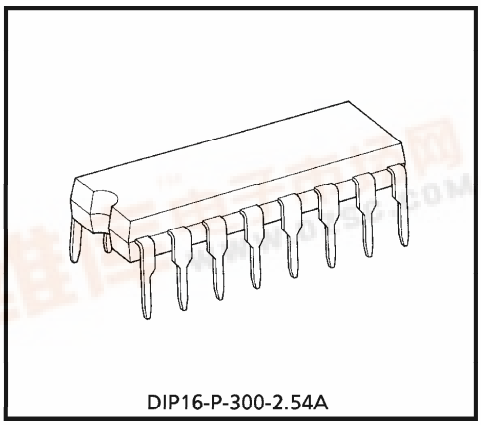

Weight : 1.11g (Typ.)

FEATURES

- 1 chip stepping motor controller / driver.
- 3 or 4 phase and 1, 1-2, 2 phase excitation drive are available.
- CW / CCW rotation and 1 clock or 2 clock drive are available.
- Hysteresis is provided with clock, CW / CCW, reset inputs for noise protection.
- Output enable, initial detect are available.
- Output current up to 400mA (MAX.)

BLOCK DIAGRAM

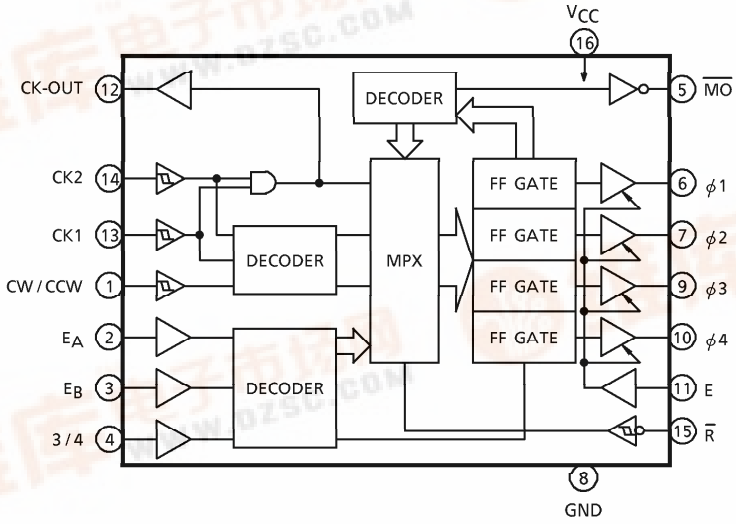

PIN FUNCTION

PIN No.	SYMBOL	PIN NAME	FUNCTIONAL DESCRIPTION	
1	CW / CCW	Clock Wise / Counter Clock Wise	Direction Control Input	Function Table A
2	E_A	Excitation A	Phase Excitation Mode Input	Truth Table B
3	E_B	Excitation B		
4	3 / 4	3 Phases / 4 Phases	Phase Control Input	
5	$\overline{MO}$	Monitor Out	$\overline{MO}$ = "L" at Initial State	
6	$\phi 1$	$\phi 1$ Out	$\phi 1$ Output	
7	$\phi 2$	$\phi 2$ Out	$\phi 2$ Output	
8	GND	GND	GND	
9	$\phi 3$	$\phi 3$ Out	$\phi 3$ Output	
10	$\phi 4$	$\phi 4$ Out	$\phi 4$ Output	
11	E	Output Enable	Outputs are Enable at E = "H"	
12	CK-OUT	Clock-Out	Clock Output	
13	CK1	Clock I_n-1	Clock Input 1	Truth Table A
14	CK2	Clock I_n-2	Clock Input 2	
15	$\overline{R}$	Reset	Reset Input	
16	V_{CC}	V_{CC}	V_{CC}	

TRUTH TABLE A

CK1	CK2	CW / CCW	FUNCTION
↑	H	L	CW
⊓	L	L	Inhibit
H	↑	L	CCW
L	⊓	L	Inhibit
↑	H	H	CCW
⊓	L	H	Inhibit
H	↑	H	CW
L	⊓	H	Inhibit

TRUTH TABLE B

E_A	E_B	3 / 4 (Note)	FUNCTION	
L	L	L	4 Phases	1 Phase Excitation
H	L	L		2 Phase Excitation
L	H	L		1-2 Phase Excitation
H	H	L	Test Mode $\phi 1 \sim \phi 4$ ON	
L	L	H	3 Phases	1 Phase Excitation
H	L	H		2 Phase Excitation
L	H	H		1-2 Phase Excitation
H	H	H	Test Mode $\phi 1 \sim \phi 4$ ON	

(Note) Conversion of Phase Excitation Mode must be made after the Reset Mode is established.

SCHEMATIC OF INPUTS AND OUTPUTS

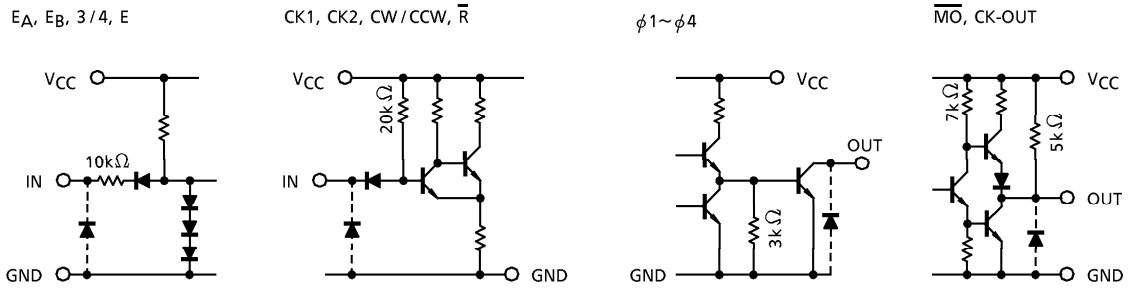

MAXIMUM RATINGS (Ta = 25°C Unless otherwise noted)

CHARACTERISTIC	SYMBOL	RATING	UNIT
Supply Voltage	V_{CC}	−0.3~7.0	V
Output Sustaining Voltage	$V_{CE\ (SUS)\ \phi}$	−0.3~28	V
Output Current (φn)	$I_{OUT\phi}$	400	mA
Output Current ($\overline{MO}$, CK-OUT)	$I_{OUT\ \overline{MO}\ CK\text{-}OUT}$	10	mA
Input Voltage	V_{IN}	$-0.3 \sim V_{CC} + 0.3$	V
Input Current	I_{IN}	±1	mA
Power Dissipation	P_D	1.2	W
Operating Temperature	T_{opr}	−30~85	°C
Storage Temperature	T_{stg}	−55~150	°C

RECOMMENDED OPERATING CONDITIONS (Ta = −30~85°C)

CHARACTERISTIC		SYMBOL	TEST CONDITION	MIN.	TYP.	MAX.	UNIT
Supply Voltage		V_{CC}	—	4.5	5.0	5.5	V
Output Sustaining Voltage		$V_{CE\ (SUS)\ \phi}$	—	0	—	26	V
Output Current φn	"L" Level	$I_{OUT\phi}$	—	—	—	200	mA
Output Current $\overline{MO}$, CK-OUT	"H" Level	I_{OH}	—	—	—	−0.4	mA
	"L" Level	I_{OL}	—	—	—	8	
Input Voltage		V_{IN}	—	0	—	V_{CC}	V
Clock Frequency		f_{CLOCK}	—	0	—	100	kHz
Power Dissipation		P_D	—	—	—	0.6	W

ELECTRICAL CHARACTERISTICS (Ta = 25°C)

CHARACTERISTIC			SYMBOL	TEST CIR-CUIT	TEST CONDITION	MIN.	TYP.	MAX.	UNIT
Input Voltage	"H" Level		V_{IH}	—	—	2.0	—	—	V
	"L" Level		V_{IL}	—	—	—	—	0.8	
Input Current	"H" Level		I_{IH}	—	V_{CC} = 5.5V, V_{IH} = 5.5V	—	—	10	μA
	"L" Level		I_{IL}	—	V_{CC} = 5.5V, V_{IL} = 0.4V	—	—	−0.4	mA
Hysteresis			ΔV_T	—	—	—	150	—	mV
Supply Current			I_{CC}	—	—	—	—	100	mA
Output Leakage Current ϕn			$I_{OH\phi}$	—	V_{CC} = 5.5V, V_{OUT} = 26V	—	—	100	μA
Output Voltage	"H" Level	$\overline{MO}$ CK-OUT	V_{OH}	—	V_{CC} = 4.5V, I_{OH} = −0.4mA	2.4	—	—	V
					V_{CC} = 5.0V, I_{OH} = −10μA	4.0	—	—	
	"L" Level	$\overline{MO}$ CK-OUT	V_{OL}	—	V_{CC} = 4.5V, I_{OL} = 8mA	—	—	0.4	
		ϕn	$V_{OUT\phi}$	—	V_{CC} = 4.5V, I_{OUT} = 400mA t = 100ms	—	—	1.1	
				—	V_{CC} = 4.5V, I_{OUT} = 200mA t = 100ms	—	—	0.6	

SWITCHING CHARACTERISTICS (Ta = 25°C)

CHARACTERISTIC			SYMBOL	TEST CIR-CUIT	TEST CONDITION	MIN.	TYP.	MAX.	UNIT
Propa-gation Delay Time	"H" Level	CK-ϕn	t_{pLH}	—	—	—	2.0	—	μs
		CK-CK-OUT				—	1.0	—	
		CK-$\overline{MO}$				—	2.8	—	
		E-ϕn				—	1.0	—	
		R-ϕn				—	2.0	—	
	"L" Level	CK-ϕn	t_{pHL}	—	—	—	1.4	—	
		CK-CK-OUT				—	0.7	—	
		CK-$\overline{MO}$				—	2.1	—	
		E-ϕn				—	1.2	—	
		$\overline{R}$-ϕn				—	1.0	—	
		R-MO				—	2.0	—	
Maximum Clock Frequency			f_{max}	—	—	—	250	—	kHz
Set Up Time CK, CW / CCW			$t_{set\text{-}up}$	—	—	—	0.1	—	μs
Hold Time CK, CW / CCW			t_{hold}			—	0.1	—	
Minimum Clock Pulse Width			t_{w} (CK)	—	—	—	1.0	—	
Minimum Reset Pulse Width			t_{w} (R)	—	—	—	1.0	—	
Maximum Clock Rise Time			t_{r} (CK)	—	—	—	10	—	

TIMING CHART
3 PHASES METHOD

1 PHASE EXCITATION CW

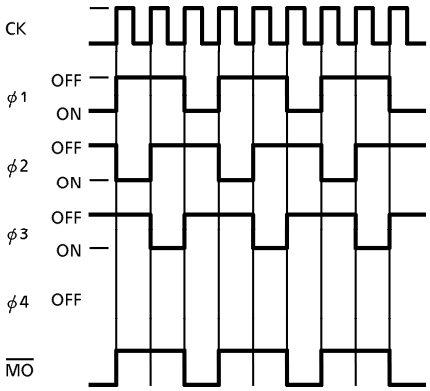

1 PHASE EXCITATION CCW

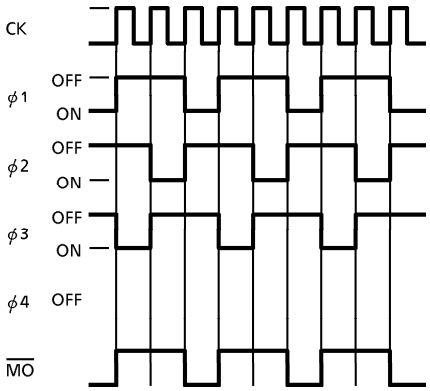

2 PHASE EXCITATION CW

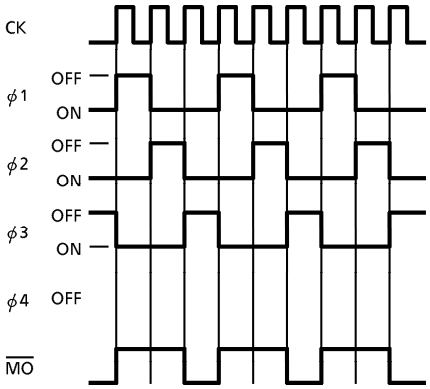

2 PHASE EXCITATION CCW

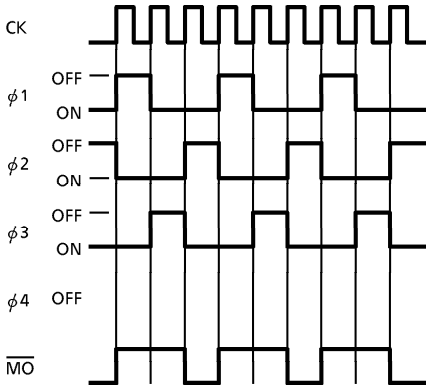

1-2 PHASE EXCITATION CW

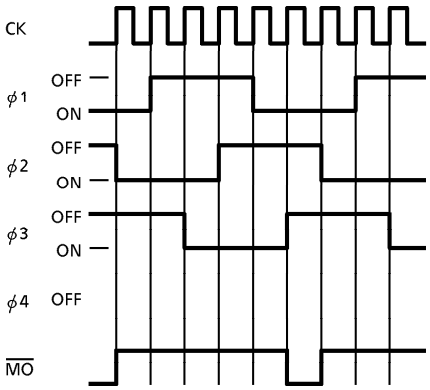

1-2 PHASE EXCITATION CCW

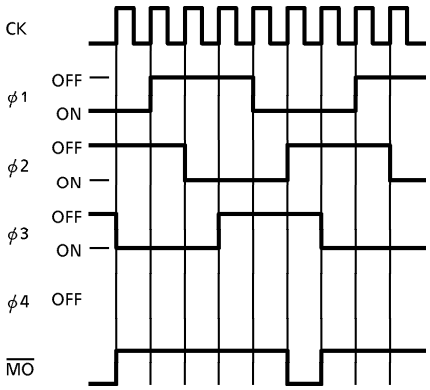

4 PHASES METHOD

1 PHASE EXCITATION CW

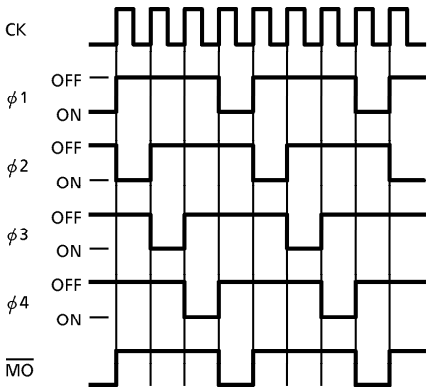

1 PHASE EXCITATION CCW

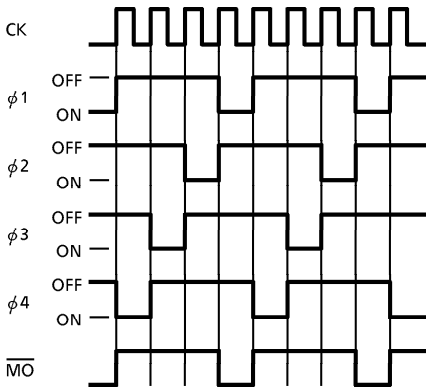

2 PHASE EXCITATION CW

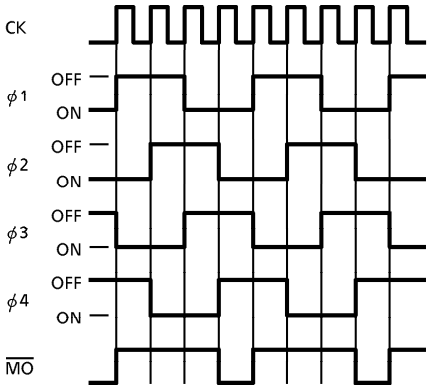

2 PHASE EXCITATION CCW

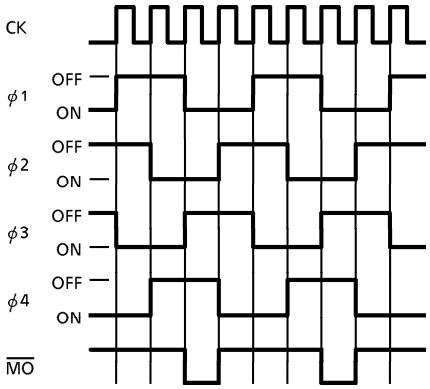

1-2 PHASE EXCITATION CW

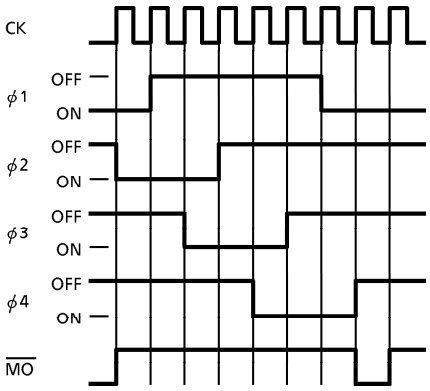

1-2 PHASE EXCITATION CCW

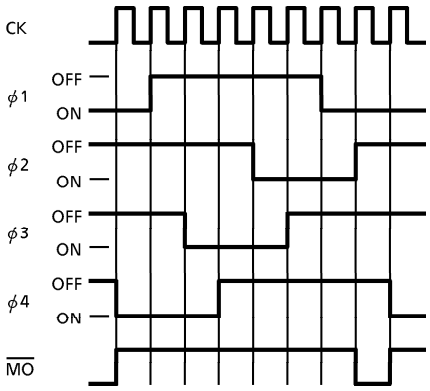

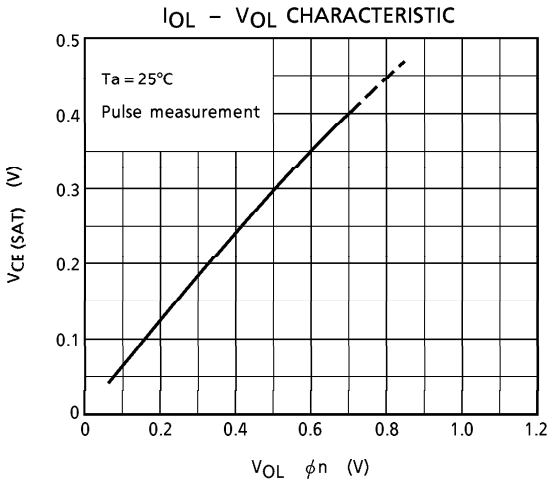
IOL – VOL CHARACTERISTIC
Ta = 25°C
Pulse measurement
VCE (SAT) (V)
VOL ϕn (V)
0
0.1
0.2
0.3
0.4
0.5
0.2
0.4
0.6
0.8
1.0
1.2

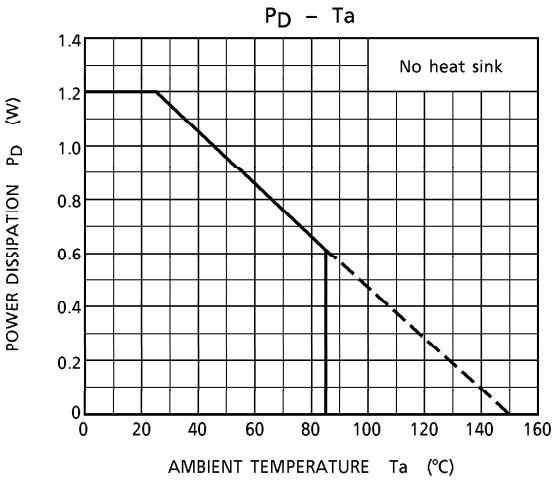
PD – Ta
No heat sink
POWER DISSIPATION PD (W)
AMBIENT TEMPERATURE Ta (°C)
0
0.2
0.4
0.6
0.8
1.0
1.2
1.4
20
40
60
80
100
120
140
160

APPLICATION CIRCUIT 1

(TA8415P + TD62308BP 4 phase stepping motor driver circuit)

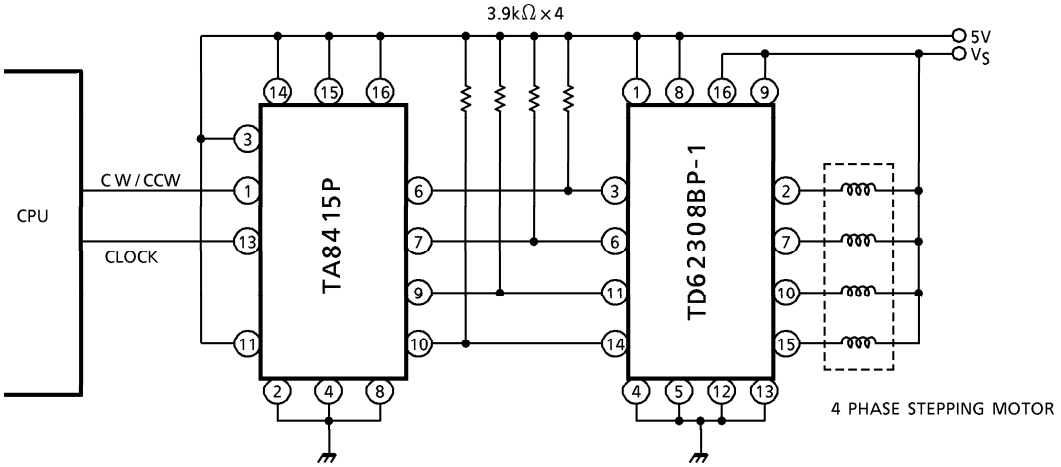

APPLICATION CIRCUIT 2

(TA8415P + TD62553S + MP4001 high efficiency stepping motor driver circuit)

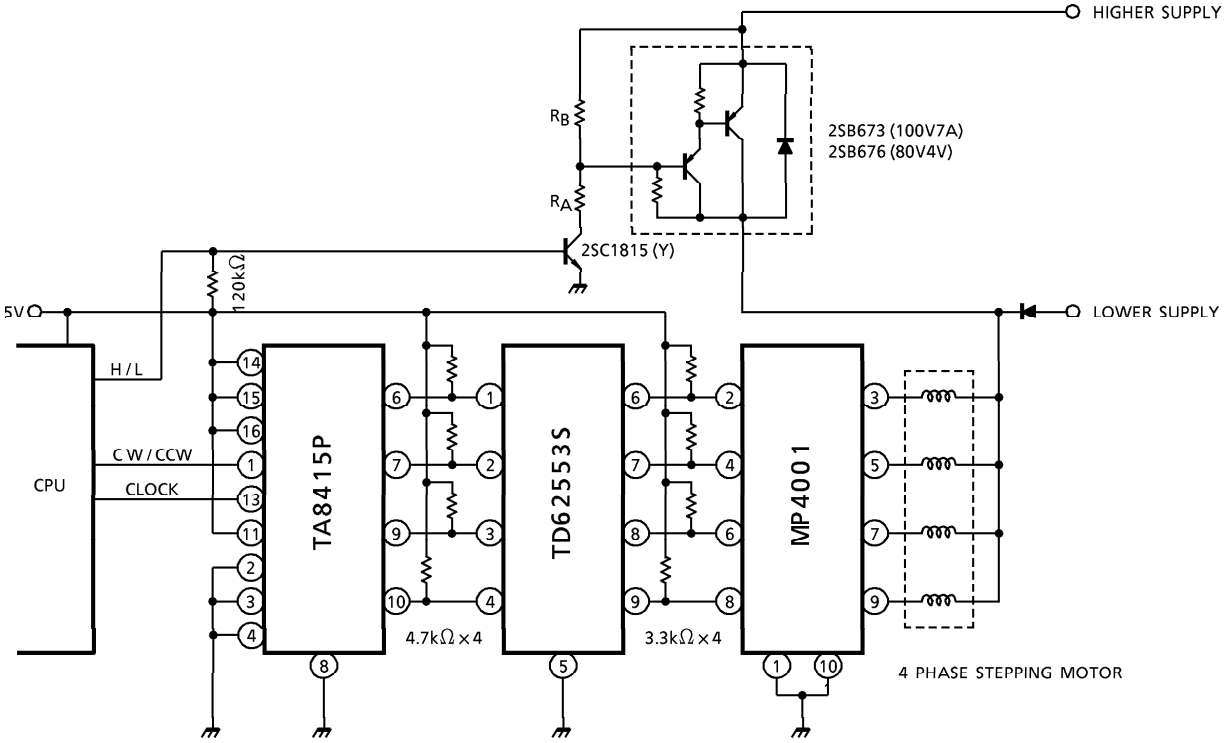

APPLICATION CIRCUIT 3

4 phase motor 1-2 phase excitation drive Ⅰ.

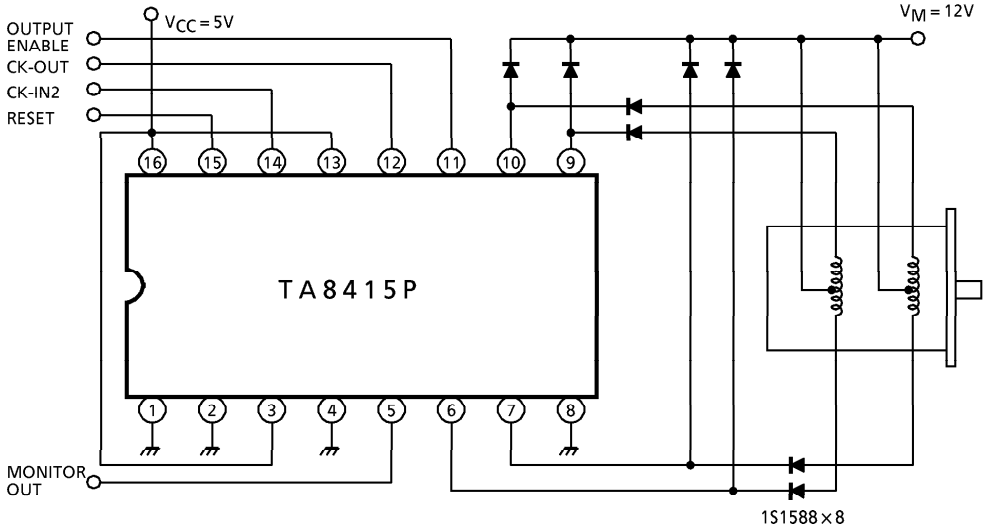

APPLICATION CIRCUIT 4

4 phase motor 1-2 phase excitation drive Ⅱ.

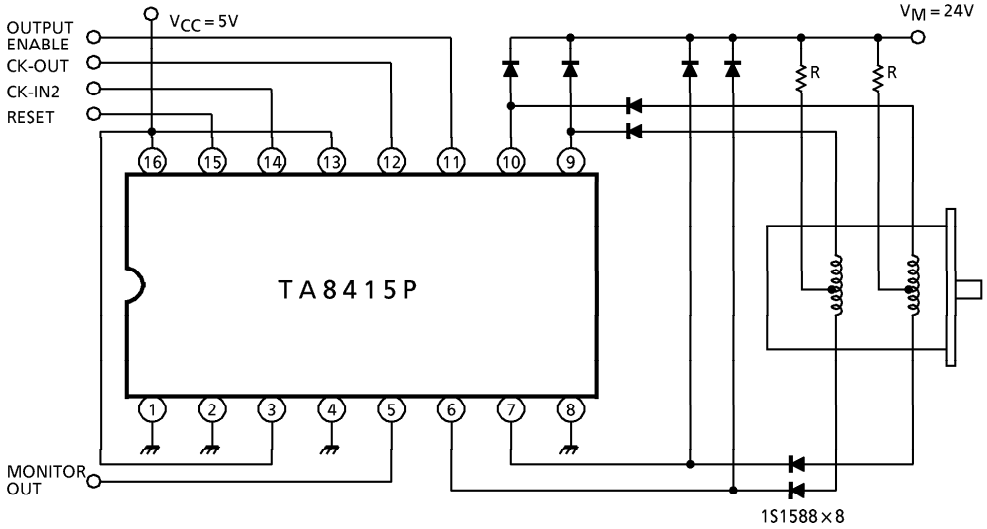

(Note) Utmost care is necessary in the design of the output line, power supply and GND line since IC may be destroyed due to short-circuit between outputs, air contamination fault, or fault by improper grounding.

OUTLINE DRAWING

DIP16-P-300-2.54A

Unit : mm

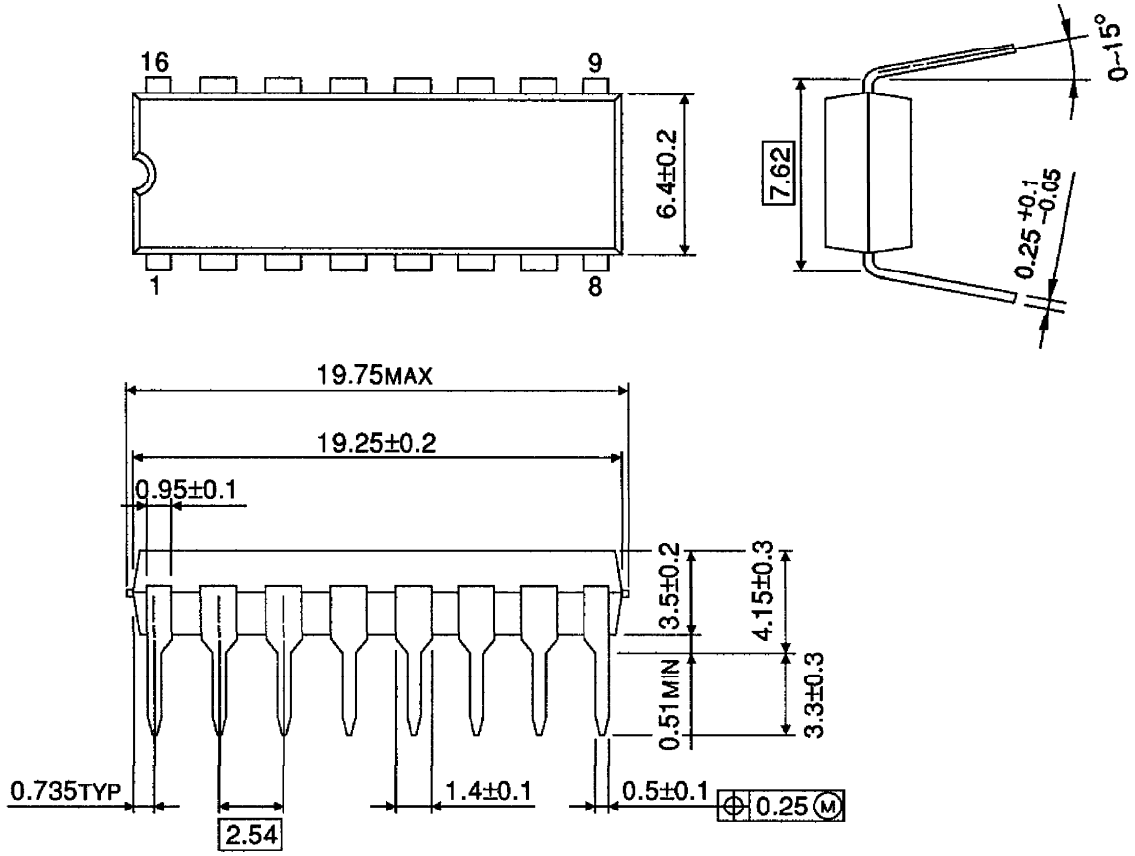

Weight : 1.11g (Typ.)