TEA2114

VIDEO SWITCH

- 2 VIDEO OUTPUTS WITH 150Ω LOAD DRIVE CAPABILITY
- DYNAMIC OUTPUT AMPLITUDE 4 V_{PP} ON EACH OUTPUT
- BANDWIDTH 18MHz TYP
- CLAMPED VIDEO INPUTS
- FULL PROTECTION AGAINST ESD

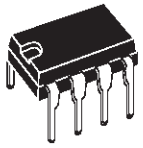

DIP8
(Plastic Package)

ORDER CODE : TEA2114

DESCRIPTION

This integrated circuit provides general video switches. It is particularly intended for switching between the peri TV plug and video section of the sets. Its electrical performances make it suitable for wide bandwidth applications (Teletext, D2MAC).

PIN CONNECTIONS

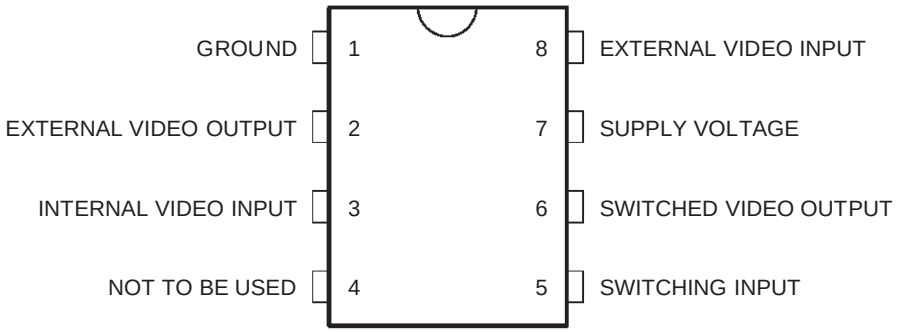

2114-01.EPS

BLOCK DIAGRAM

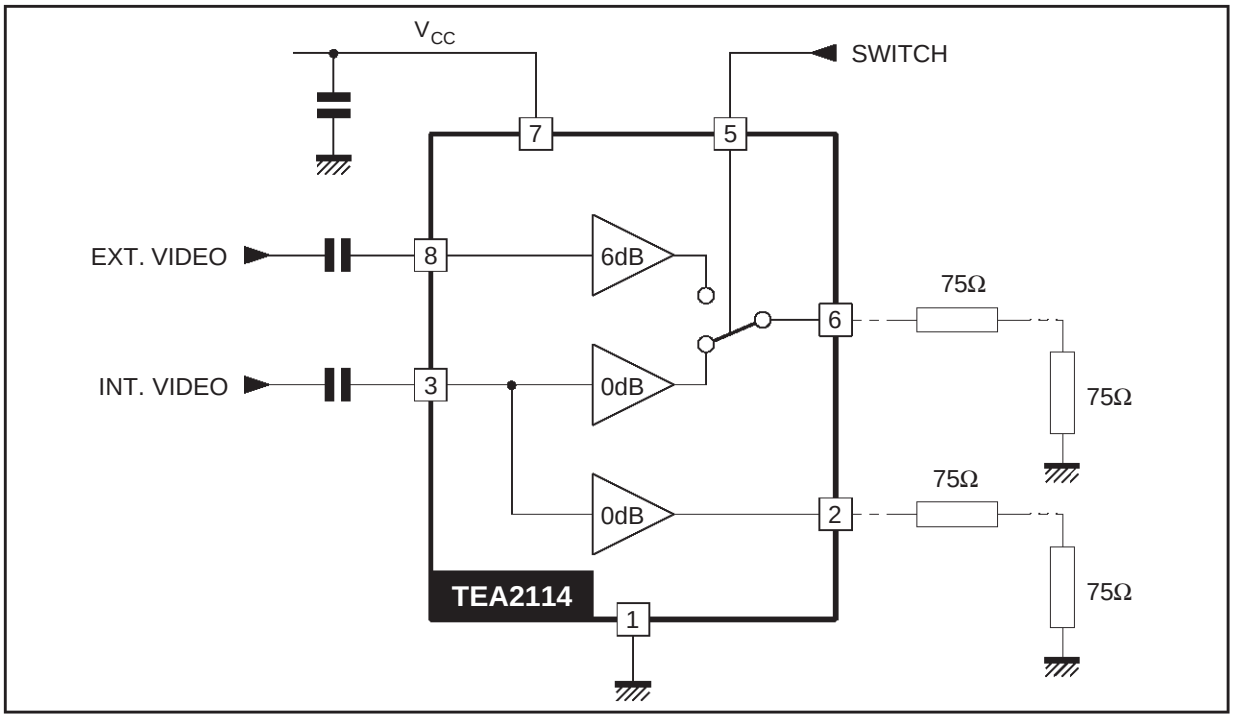

ABSOLUTE MAXIMUM RATINGS

Symbol	Parameter	Value	Unit
V_{CC}	Supply Voltage	14	V
T_j	Junction Temperature	- 40, + 150	^oC
T_{stg}	Storage Temperature	- 40, + 150	^oC

2114-01.TBL

ELECTRICAL CHARACTERISTICS

T_A = 25°C, V_{CC} = 8V (unless otherwise specified)

Symbol	Parameter	Min.	Typ.	Max.	Unit
V_{CC}	Supply Voltage	6.5		13.2	V
I_{CC}	Supply Current (no load Pin 2 and Pin 6)		10	15	mA
I_{CC}	Supply Current (with load 150Ω on Pin 2 and Pin 6, no video on inputs)		25		mA

INPUTS (Pin 3 and Pin 8)

	Video Input Swing Pin3 Pin8		4 2		V_{PP} V_{PP}
V_{DCIN}	DC Level Input	1.6	1.9	2.2	V
I_{IN}	Input Bias Current (V_{DC} = V_{DCIN} + 1.5 V_{DC})		2	5	µA

2114-02.TBL

ELECTRICAL CHARACTERISTICS (continued)
$T_A = 25^oC$, $V_{CC} = 8V$ (unless otherwise specified)

Symbol	Parameter	Min.	Typ.	Max.	Unit
SWITCHED OUTPUT (Pin 6) ($R_{LOAD} = 150\Omega$)					
	Video Output Swing	3	4		V_{PP}
	DC Level Output	0.7	1.1	1.4	V
	Video Gain Pin 6 versus Pin 3, measured at 100kHz, 1 V_{PP} input signal Pin 6 versus Pin 8, measured at 100kHz, 1 V_{PP} input signal	-0.8 5.5	-0.3 6	0.2 6.5	dB dB
	Video Bandwidth Pin 6 versus Pin 3, 1V_{PP} input signal Pin 6 versus Pin 8, 1V_{PP} input signal	18 12	27 18		MHz MHz
	Output Impedance (measured Pin 6)		1		Ω
EXTERNAL OUTPUT (Pin 2) ($R_{LOAD} = 150\Omega$)					
	Video Output Swing	3	4		V_{PP}
	DC Level Output	0.7	1.1	1.4	V
	Video Gain (Pin 2 versus Pin 3, measured at 100kHz, 1 V_{PP} input signal)	-0.8	-0.3	0.2	dB
	Video Bandwidth (Pin 2 versus Pin 3, 1V_{PP} input signal)	18	27		MHz
	Output Impedance (measured Pin 2)		1		Ω
SWITCHING INPUT (Pin 5)					
	Output Current Selection Pin ($V_5 = 0V$)			10	µA
	Threshold Voltage	2.5	3.7	5	V
	Max DC Level			V_{CC}	V
OTHER DYNAMIC FEATURES ($R_{LOAD} = 150\Omega$ on Pin 2 and Pin 6)					
	Crosstalk (between any input, measured at 5MHz)		- 50		dB

2114-03.TBL

PACKAGE MECHANICAL DATA
8 PINS - PLASTIC DIP

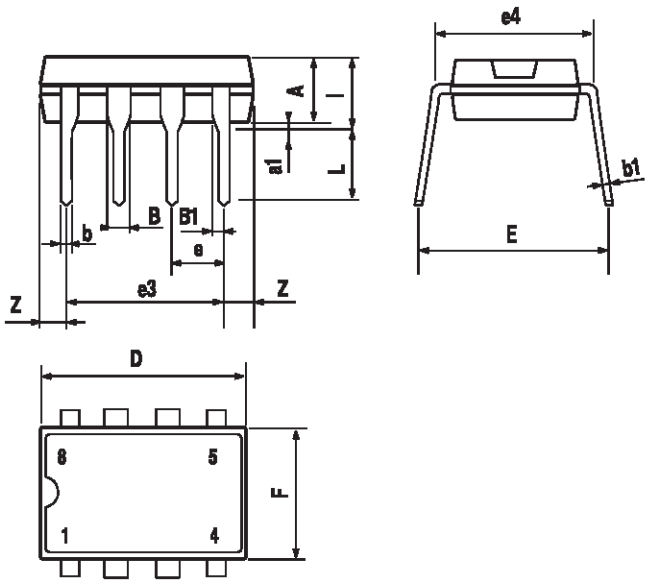

PM-DIP8.EPS

Dimensions	Millimeters			Inches		
	Min.	Typ.	Max.	Min.	Typ.	Max.
A		3.32			0.131	
a1	0.51			0.020		
B	1.15		1.65	0.045		0.065
b	0.356		0.55	0.014		0.022
b1	0.204		0.304	0.008		0.012
D			10.92			0.430
E	7.95		9.75	0.313		0.384
e		2.54			0.100	
e3		7.62			0.300	
e4		7.62			0.300	
F			6.6			0260
I			5.08			0.200
L	3.18		3.81	0.125		0.150
Z			1.52			0.060

DIP8.TBL