查询THDT58S1供应商 捷多邦，专业PCB打样工厂，24小时加急出货

SGS-THOMSON MICROELECTRONICS

THDT58S1
THDT58S

Application Specific Discretes
A.S.D.™

TRANSIENT VOLTAGE SUPPRESSOR FOR SLIC PROTECTION

FEATURES

- CROWBAR PROTECTION
- DUAL ASYMMETRICAL TRANSIENT SUPPRESSOR
- PEAK PULSE CURRENT :
  - I_{PP} = 75 A, 10/1000 µs for THDT58S.
  - I_{PP} = 35 A, 10/1000 µs for THDT58S1.
- HOLDING CURRENT = 150 mA min
- BREAKDOWN VOLTAGE = 58 V.
- BREAKOVER VOLTAGE = 80V max

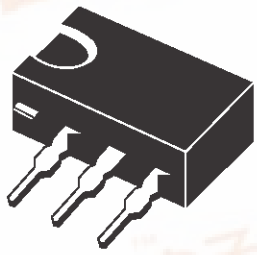

SIP 3

DESCRIPTION

This device has been especially designed to protect subscriber line card interfaces (SLIC) against transient overvoltages.

Its ion-implanted technology confers its excellent electrical characteristics.
This is why this device easily fulfils the main protection standards which are related to the overvoltages suppression on telecom lines.
The product pinout is compatible with TO202 and TO220 packages.

COMPLIES WITH THE FOLLOWING STANDARDS :

CCITT K20 :	10/700 µs 5/310 µs	1kV 25A
VDE 0433 :	10/700 µs 5/200 µs	2kV 45/50A(*)
VDE 0878 :	1.2/50 µs 1/20 µs	1.5kV 40A
CNET I3124:	0.5/700 µs 0.2/310µs	1kV 25A
BELLCORE TR-NWT-001089 :	10/1000µs 10/1000µs	1kV 35/75A (*)

(*) with series resistors or PTC.

SCHEMATIC DIAGRAM

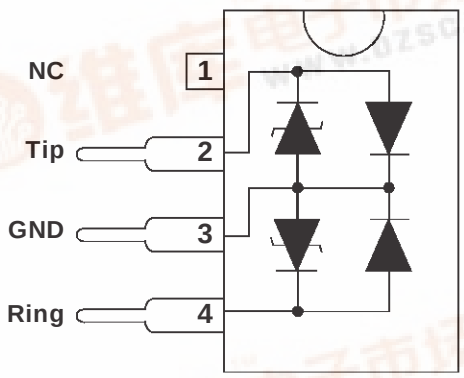

TM: ASD is trademarks of SGS-THOMSON Microelectronics.

找PDF 维库一下 pdf.dzsc.com

ABSOLUTE MAXIMUM RATINGS (T_{amb} = 25°C)

Symbol	Parameter		THDT58S1	THDT58S	Unit
I_{PP}	Peak pulse current (see note 1)	10/1000 µs 8/20 µs 2/10 µs	35 70 80	75 150	A
I_{TSM}	Non repetitive surge peak on-state current (F = 50Hz)	t = 20 ms	20	30	A
dV/dt	Critical rate of rise of off-state voltage	67% V_{BR}		5	kV/µs
T_{stg} T_j	Storage temperature range Maximum operating junction temperature		-55 to +150 +150	-40 to +150 +150	°C °C
T_L	Maximum lead temperature for soldering during 10s		260	260	°C

Note 1 : Pulse waveform :

10/1000µs	t_r=10µs	t_p=1000µs
5/310µs	t_r=5µs	t_p=310µs
2/10µs	t_r=2µs	t_p=10µs

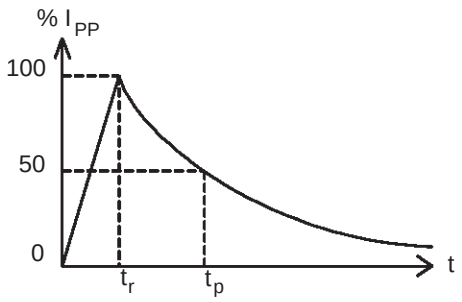

THERMAL RESISTANCES

Symbol	Parameter	Value	Unit
R_{th} (j-a)	Junction to ambient	80	°C/W

ELECTRICAL CHARACTERISTICS (T_{amb} = 25°C)

Symbol	Parameter
V_{RM}	Stand-off voltage
I_{RM}	Leakage current at V_{RM}
V_{BR}	Breakdown voltage
V_{BO}	Breakover voltage
I_H	Holding current
V_F	Forward Voltage drop
I_{BO}	Breakover current
I_{PP}	Peak pulse current
C	Capacitance

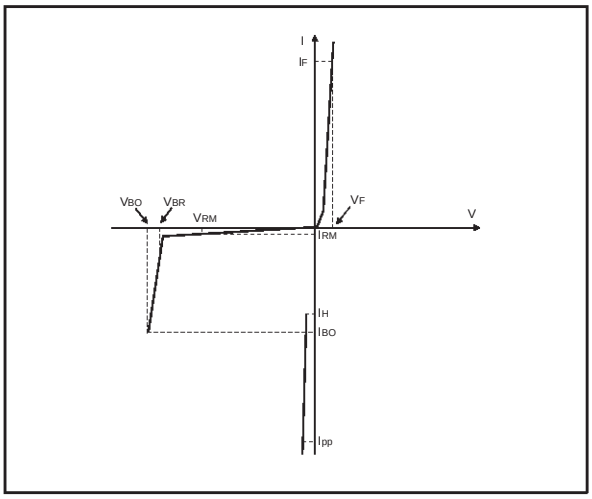

1 - PARAMETER RELATED TO THE DIODE LINE/GND

Symbol	Test conditions		Value	Unit
V_F	I_F = 5 A	tp = 500 µs	5	V

2 - PARAMETERS RELATED TO THE PROTECTION THYRISTOR

Type	I_{RM} @ V_{RM} max.		V_{BR} @ I_R min.		V_{BO} @ I_{BO} max.	min. note1	max.	I_H min. note 2	C max. note 3
	µA	V	V	mA	V	mA	mA	mA	pF
THDT58S	10	56	58	1	80	150	800	150	400
THDT58S1	10	56	58	1	80	50	800	150	200

Note 1 : See the reference test circuit 1 for I_{BO} and V_{BO} parameters.
Note 2 : See test circuit 2.
Note 3 : V_R = 1V, F = 1MHz.

REFERENCE TEST CIRCUIT 1 :

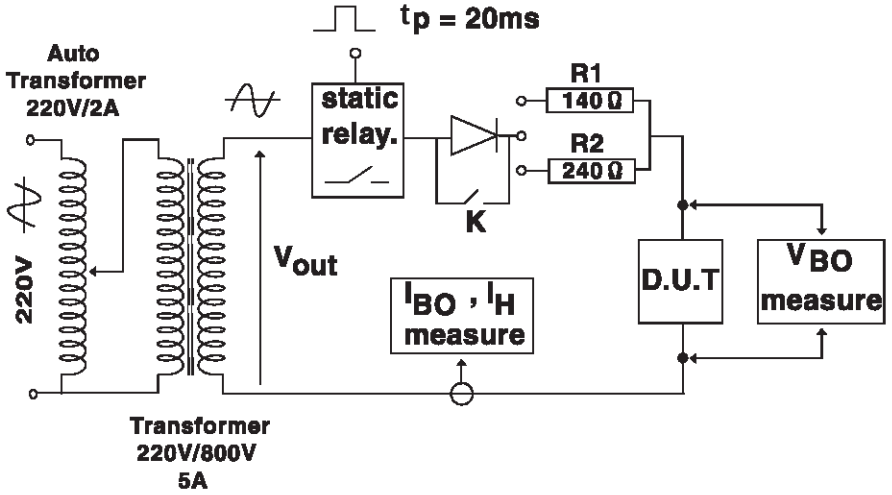

TEST PROCEDURE :

- Pulse Test duration (tp = 20ms):
  - For Bidirectional devices = Switch K is closed
  - For Unidirectional devices = Switch K is open.
- V_{OUT} Selection
  - Device with V_{BO} < 200 Volt
    - V_{OUT} = 250 V_{RMS}, R_1 = 140 Ω.
  - Device with V_{BO} ≥ 200 Volt
    - V_{OUT} = 480 V_{RMS}, R_2 = 240 Ω.

FUNCTIONAL HOLDING CURRENT (I_H) TEST CIRCUIT 2

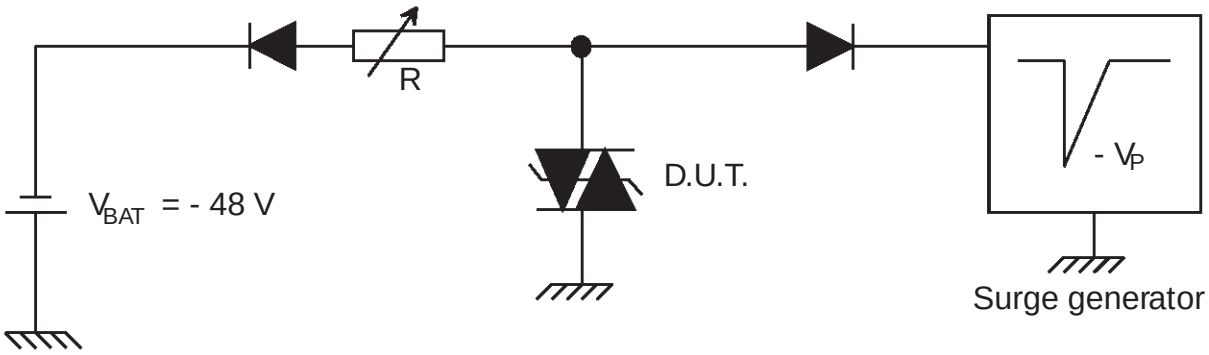

This is a GO-NOGO Test which allows to confirm the holding current (I_H) level in a functional test circuit.

TEST PROCEDURE :

- 1) Adjust the current level at the I_H value by short circuiting the AK of the D.U.T.
  2) Fire the D.U.T with a surge Current : Ipp = 10A , 10/1000 µs.
  3) The D.U.T will come back off-state within 50 ms max.

Fig. 1: Relative variation of holding current junction temperature.

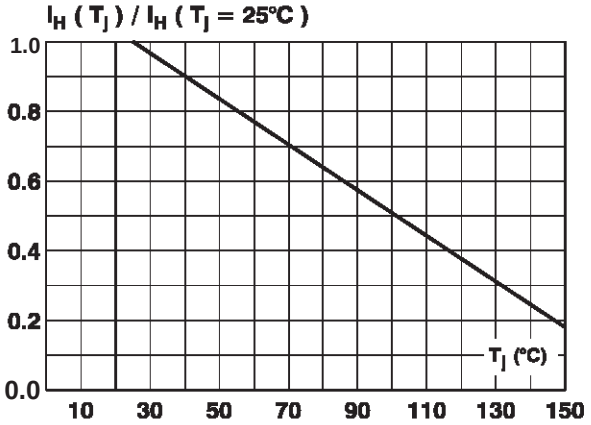

Fig. 2: Capacitance versus reverse applied voltage (typical values).

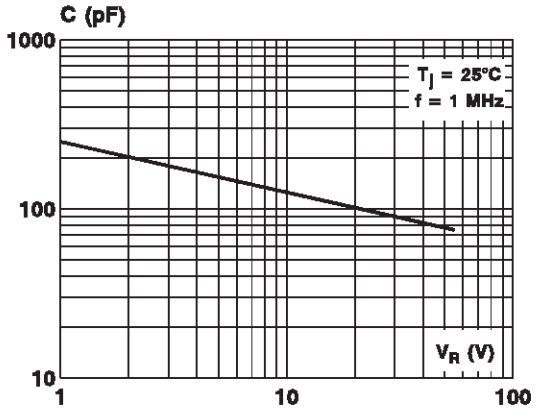

Fig. 3: Peak on state voltage versus peak on state current (typical values).

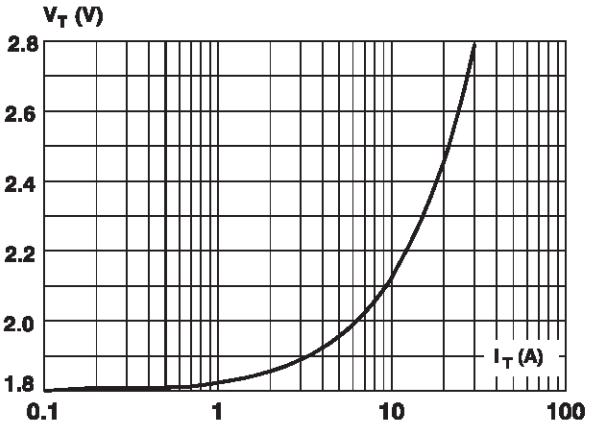

Fig. 4: Peak forward voltage drop versus peak forward current (typical values).

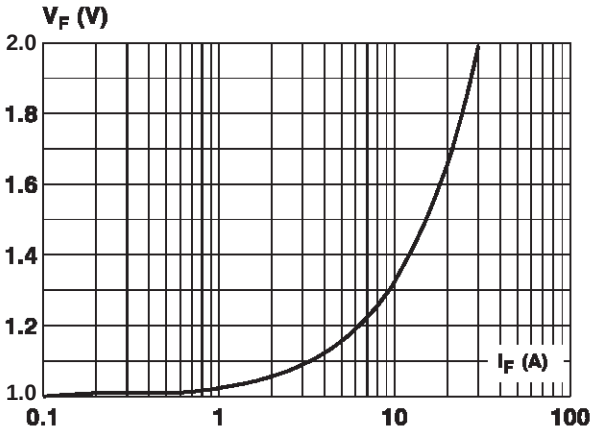

Fig. 5: Surge peak current versus overload duration (THDT58S).

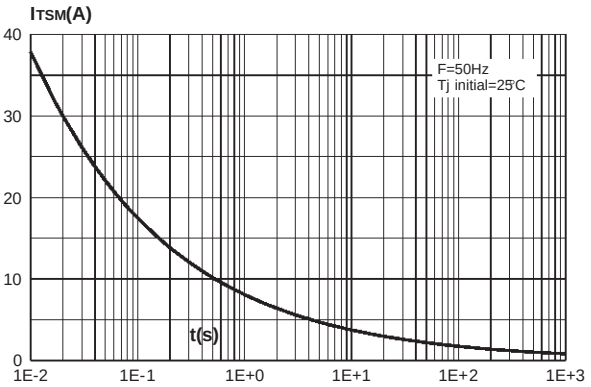

Fig. 6: Surge peak current versus overload duration (THDT58S1).

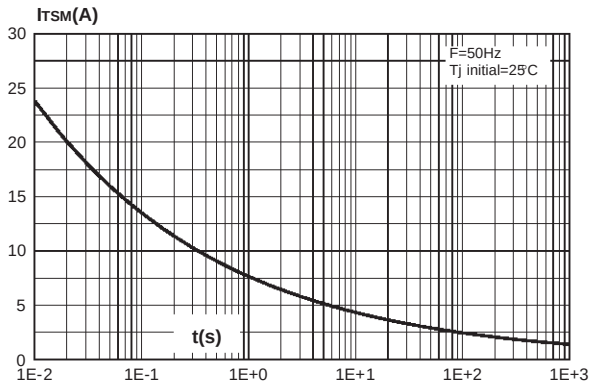

APPLICATION CIRCUIT

Typical SLIC protection concept

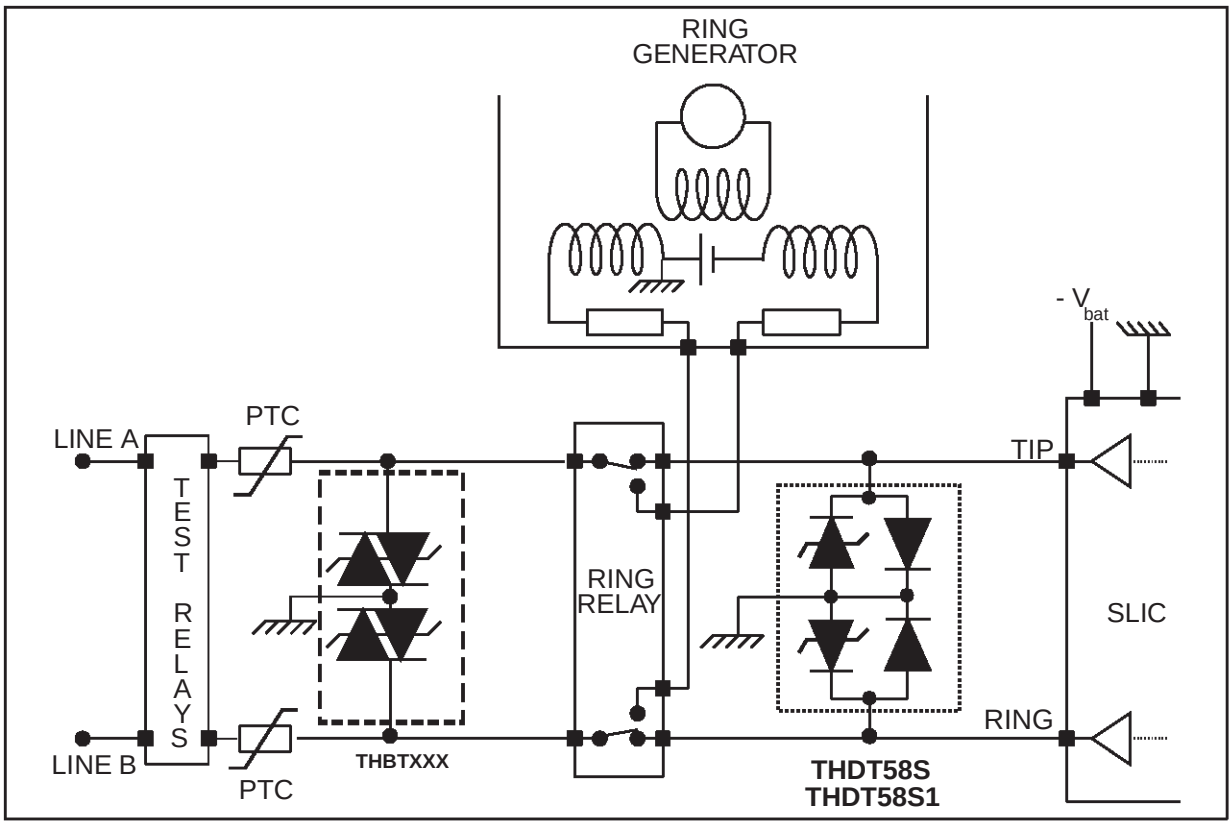

FUNCTIONAL DESCRIPTION

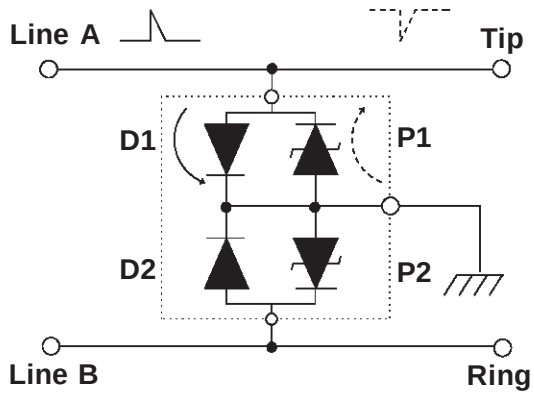

Line A Protection =

- For positive Surges versus GND, the diode D1 will conduct
- For negative Surges versus GND, the Protection device P1 will trigger at a maximum voltage equal to the V_{BO}.

Line B Protection =

- For Surges on line B, the operating mode is the same, D2 or P2 is activated.

ORDER CODE

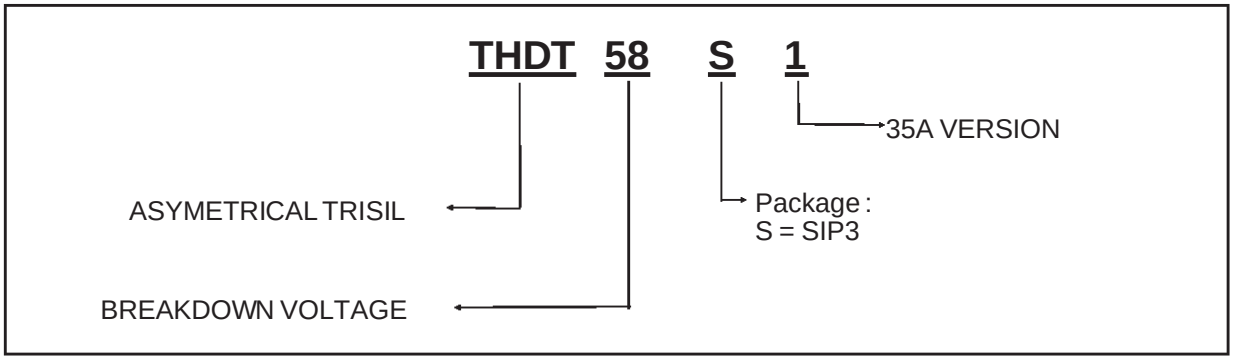

MARKING

Type	Marking
THDT58S	THDT58S
THDT58S1	THDT58S1

PACKAGE MECHANICAL DATA.

SIP 3 Plastic

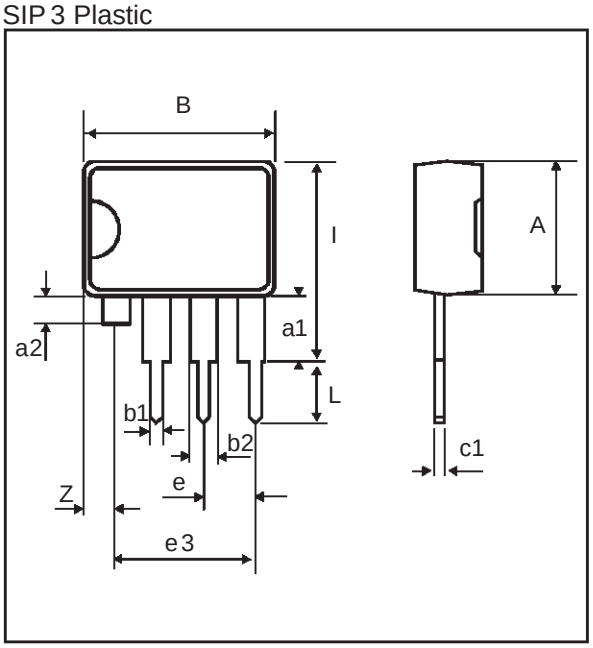

REF.	DIMENSIONS					
	Millimetres			Inches		
	Min.	Typ.	Max.	Min.	Typ.	Max.
A			7.10			0.280
a1	2.80			0.110		
a2	1.50		1.90	0.059		0.075
B			10.15			0.400
b1		0.50			0.020	
b2	1.35		1.75	0.053		0.069
c1	0.38		0.50	0.015		0.020
e		2.54			0.100	
e3		7.62			0.200	
I			10.50			0.413
L		3.30			0.130	
Z			1.50			0.059

Packaging : Standard packaging is in antistatic tubes

Weight : 0.55g

Information furnished is believed to be accurate and reliable. However, SGS-THOMSON Microelectronics assumes no responsibility for the consequences of use of such information nor for any infringement of patents or other rights of third parties which may result from its use. No license is granted by implication or otherwise under any patent or patent rights of SGS-THOMSON Microelectronics. Specifications mentioned in this publication are subject to change without notice. This publication supersedes and replaces all information previously supplied.
SGS-THOMSON Microelectronics products are not authorized for use as critical components in life support devices or systems without express written approval of SGS-THOMSON Microelectronics.

© 1998 SGS-THOMSON Microelectronics - Printed in Italy - All rights reserved.

SGS-THOMSON Microelectronics GROUP OF COMPANIES
Australia - Brazil - Canada - China - France - Germany - Italy - Japan - Korea - Malaysia - Malta - Morocco
The Netherlands - Singapore - Spain - Sweden - Switzerland - Taiwan - Thailand - United Kingdom - U.S.A.