TJM4558

WIDE BANDWIDTH DUAL BIPOLAR OPERATIONAL AMPLIFIERS

- INTERNALLY COMPENSATED
- SHORT-CIRCUIT PROTECTION
- GAIN AND PHASE MATCH BETWEEN AMPLIFIER
- LOW POWER CONSUMPTION
- PIN TO PIN COMPATIBLE WITH MC1458/LM358
- GAIN BANDWIDTH PRODUCT (at 100kHz) 5.5MHz

N
DIP8
(Plastic Package)

D
SO8
(Plastic Micropackage)

P
TSSOP8
(Thin Shrink Small Outline Package)

DESCRIPTION

The TJM4558 is a high performance monolithic dual operational amplifier.

The circuit combines all the outstanding features of the MC1458 and, in addition possesses three times the unity gain bandwidth of the industry standard.

ORDER CODE

Part Number	Temperature Range	Package		
		N	D	P
TJM4558C	0°C, +70°C	•	•	•
TJM4558I	-40°C, +105°C	•	•	•
Example : TJM4558CN				

N = Dual in Line Package (DIP)
D = Small Outline Package (SO) - also available in Tape & Reel (DT))
P = Thin Shrink Small Outline Package (TSSOP) - only available in Tape & Reel (PT)

PIN CONNECTIONS (top view)

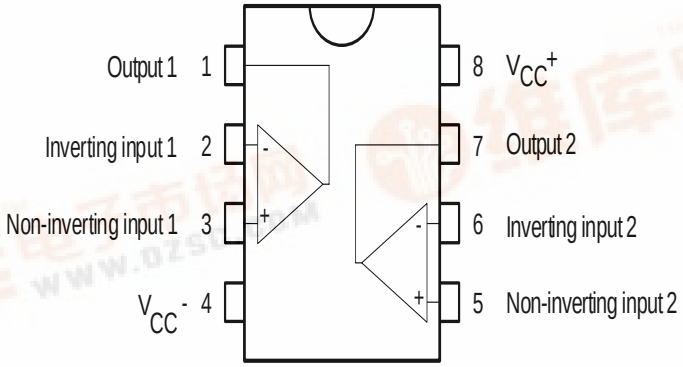

SCHEMATIC DIAGRAM (1/2 TJM4558)

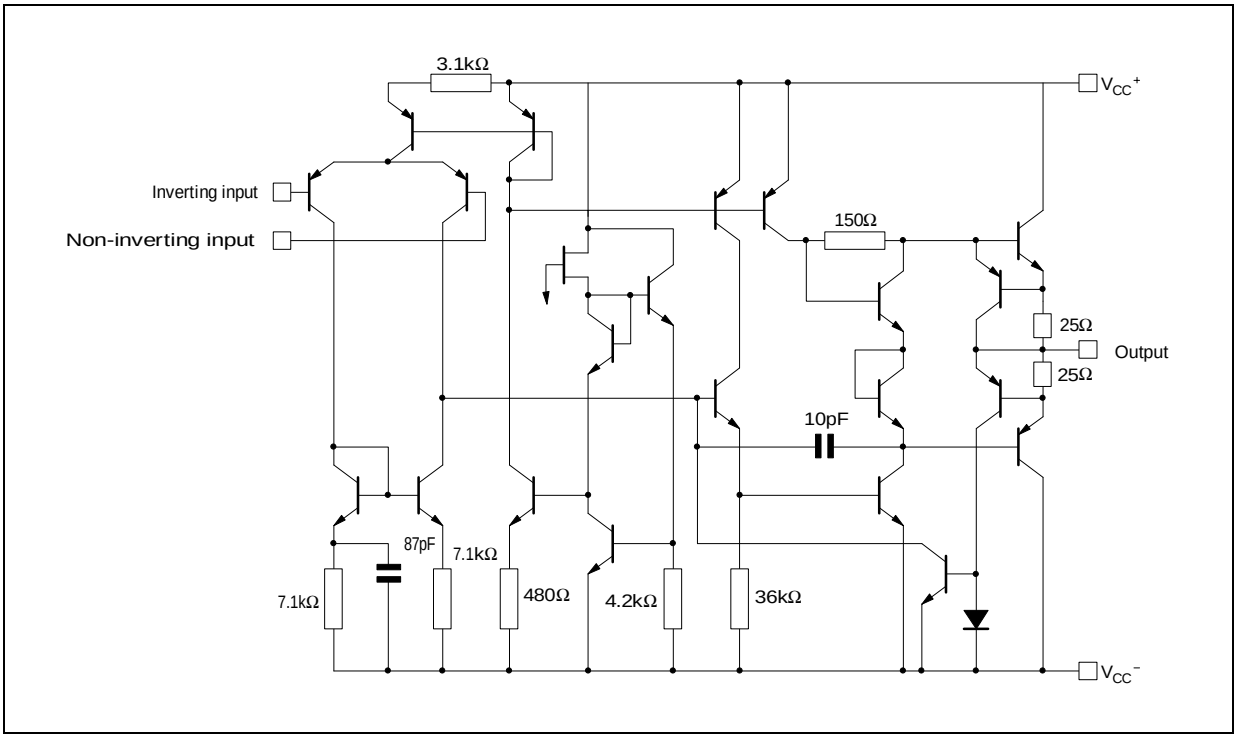

ABSOLUTE MAXIMUM RATINGS

Symbol	Parameter	TJM4558I	TJM4558C	Unit
V_{CC}	Supply Voltage	±22		V
V_i	Input Voltage	±15		V
V_{id}	Differential Input Voltage	±30		V
P_{tot}	Power Dissipation	680		mW
	Output Short Circuit Duration	Infinite		
T_{oper}	Operating Free-Air Temperature Range	-40 to +105	0 to +70	°C
T_{stg}	Storage Temperature	-65 to +150		°C

ELECTRICAL CHARACTERISTICS

V_{CC} = ±15V, T_{amb} = 25°C (unless otherwise specified)

Symbol	Parameter	Min.	Typ.	Max.	Unit
V_{io}	Input Offset Voltage ($R_S \leq 10k\Omega$) T_{amb} = +25°C $T_{min.} \leq T_{amb} \leq T_{max.}$		1	5 6	mV
I_{io}	Input Offset Current T_{amb} = +25°C $T_{min.} \leq T_{amb} \leq T_{max.}$		20 40	100	nA
I_{ib}	Input Bias Current T_{amb} = +25°C $T_{min.} \leq T_{amb} \leq T_{max.}$		50 100	400	nA
A_{vd}	Large Signal Voltage Gain (R_L = 2kΩ, V_o = ±10V) T_{amb} = +25°C $T_{min.} \leq T_{amb} \leq T_{max.}$	50 25	200		V/mV

Symbol	Parameter	Min.	Typ.	Max.	Unit
SVR	Supply Voltage Rejection Ratio ($R_S \leq 10k\Omega$) T_{amb} = +25°C $T_{min.} \leq T_{amb} \leq T_{max.}$		90 77		dB
I_{CC}	Supply Current, all amplifiers, no load T_{amb} = +25°C $T_{min.} \leq T_{amb} \leq T_{max.}$		2.3 4	4.5	mA
V_{icm}	Input Common Mode Voltage Range T_{amb} = +25°C $T_{min.} \leq T_{amb} \leq T_{max.}$	±12 ±12			V
CMR	Common-mode Rejection Ratio ($R_S \leq 10k\Omega$) T_{amb} = +25°C $T_{min.} \leq T_{amb} \leq T_{max.}$		90 70		dB
I_{os}	Output Short Circuit Current	10	20		mA
V_o	Output Voltage Swing T_{amb} = +25°C $R_L = 10k\Omega$ $R_L = 2k\Omega$ $T_{min.} \leq T_{amb} \leq T_{max.}$ $R_L = 10k\Omega$ $R_L = 2k\Omega$	±12 ±10 ±12 ±10	±14 ±13		V
SR	Slew Rate (V_i = ±10, $R_L = 2k\Omega$, C_L = 100pF, T_{amb} = 25°C, unity gain)		2.2		V/µs
t_r	Rise Time (V_i = ±20mV, $R_L = 2k\Omega$, C_L = 100pF, T_{amb} = 25°C, unity gain)		0.3		µs
K_{OV}	Overshoot (V_i = ±20mV, $R_L = 2k\Omega$, C_L = 100pF, T_{amb} = 25°C, unity gain)		15		%
R_i	Input Resistance	0.3	2		MΩ
C_i	Input Capacitance		1.4		pF
R_o	Output Resistance		75		Ω
B	Unity Gain Bandwidth		2.8		MHz
GBP	Gain Bandwidth Product (V_i = 10mV, $R_L = 2k\Omega$, C_L = 100pF, f = 100kHz, T_{amb} = 25°C)		5.5		MHz
THD	Total Harmonic Distortion (f = 1kHz, A_v = 20dB, $R_L = 2k\Omega$, $V_o = 2V_{pp}$, C_L = 100pF, T_{amb} = 25°C)		0.008		%
e_n	Equivalent Input Noise Voltage ($R_S = 100\Omega$, f = 1kHz)		12		$\frac{nV}{\sqrt{Hz}}$
V_{O1}/V_{O2}	Channel Separation		120		dB

TRANSIENT RESPONSE TEST CIRCUIT

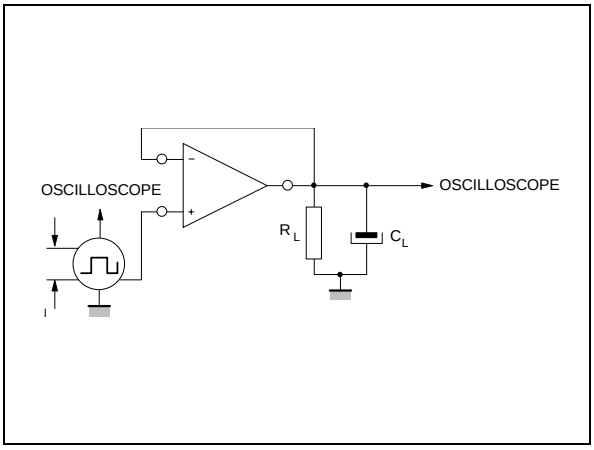

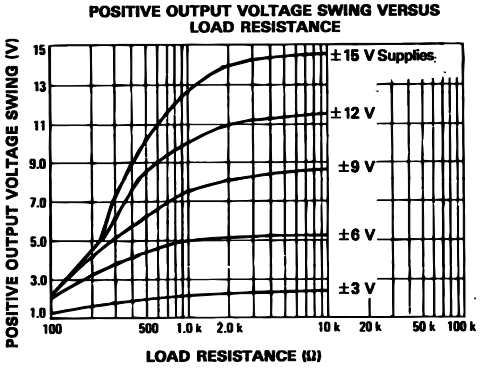

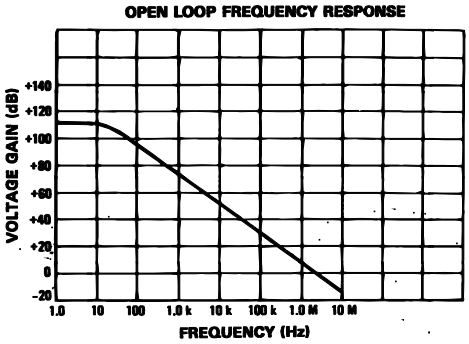

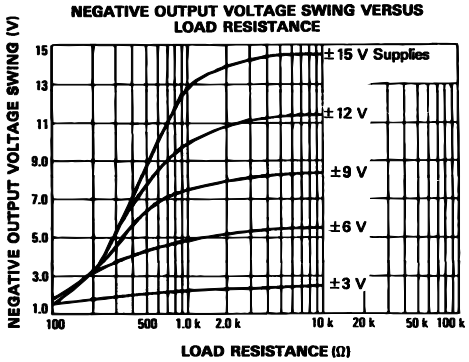

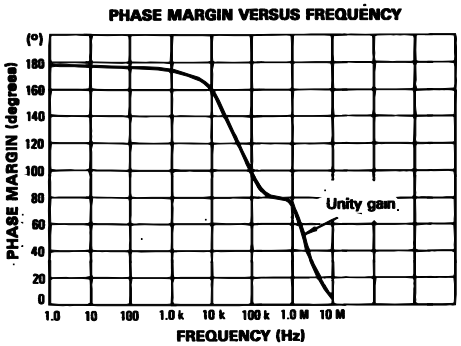

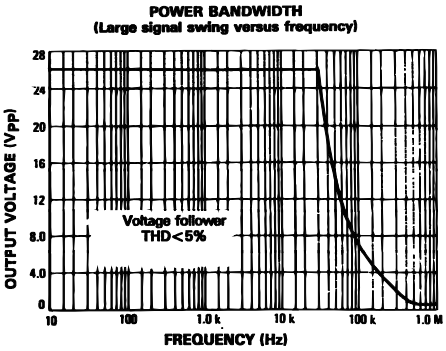

PACKAGE MECHANICAL DATA

Plastic DIP-8 MECHANICAL DATA

DIM.	mm.			inch		
	MIN.	TYP	MAX.	MIN.	TYP.	MAX.
A		3.3			0.130	
a1	0.7			0.028		
B	1.39		1.65	0.055		0.065
B1	0.91		1.04	0.036		0.041
b		0.5			0.020	
b1	0.38		0.5	0.015		0.020
D			9.8			0.386
E		8.8			0.346	
e		2.54			0.100	
e3		7.62			0.300	
e4		7.62			0.300	
F			7.1			0.280
I			4.8			0.189
L		3.3			0.130	
Z	0.44		1.6	0.017		0.063

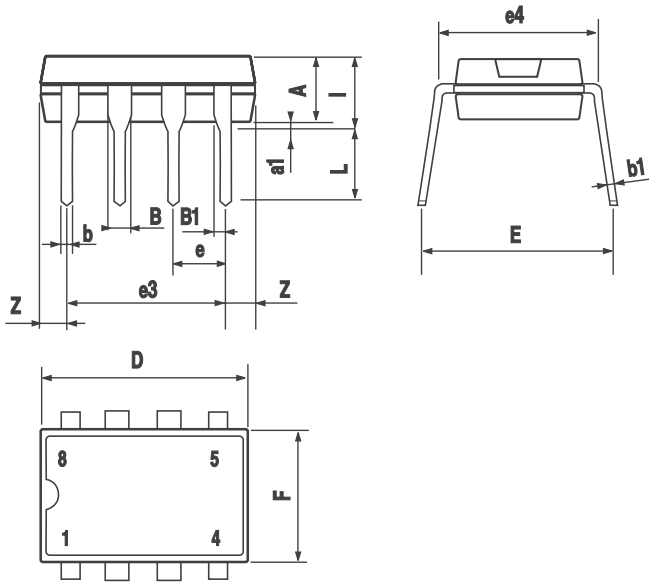

P001F

PACKAGE MECHANICAL DATA

SO-8 MECHANICAL DATA

DIM.	mm.			inch		
	MIN.	TYP	MAX.	MIN.	TYP.	MAX.
A	1.35		1.75	0.053		0.069
A1	0.10		0.25	0.04		0.010
A2	1.10		1.65	0.043		0.065
B	0.33		0.51	0.013		0.020
C	0.19		0.25	0.007		0.010
D	4.80		5.00	0.189		0.197
E	3.80		4.00	0.150		0.157
e		1.27			0.050	
H	5.80		6.20	0.228		0.244
h	0.25		0.50	0.010		0.020
L	0.40		1.27	0.016		0.050
k	8° (max.)					
ddd			0.1			0.04

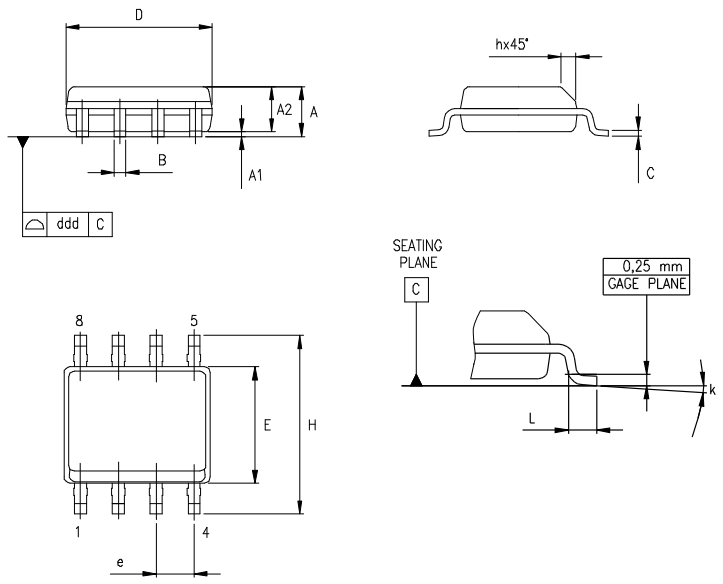

PACKAGE MECHANICAL DATA

TSSOP8 MECHANICAL DATA

DIM.	mm.			inch		
	MIN.	TYP	MAX.	MIN.	TYP.	MAX.
A			1.2			0.047
A1	0.05		0.15	0.002		0.006
A2	0.80	1.00	1.05	0.031	0.039	0.041
b	0.19		0.30	0.007		0.012
c	0.09		0.20	0.004		0.008
D	2.90	3.00	3.10	0.114	0.118	0.122
E	6.20	6.40	6.60	0.244	0.252	0.260
E1	4.30	4.40	4.50	0.169	0.173	0.177
e		0.65			0.0256	
K	0°		8°	0°		8°
L	0.45	0.60	0.75	0.018	0.024	0.030
L1		1			0.039