查询TLP106供应商 捷多邦，专业PCB打样工厂，24小时加急出货



**Preliminary** TOSHIBA PHOTOCOUPLER GaAlAs IRED & PHOTO-IC

# TLP106

Intelligent Power Module Signal Isolation

Industrial Inverters

Moter Drive

Unit in mm

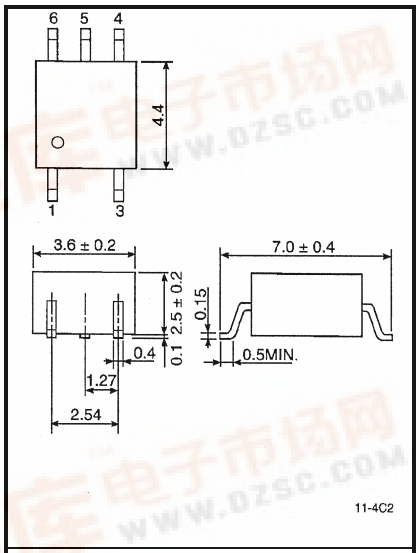


| | |
|---|---|
| JEDEC | |
| TOSHIBA | 11-4C2 |

Weight: 0.09 g

The Toshiba TLP106 consists of a GaAlAs light emitting diode and a integrated high gain, high speed photo detector.
TLP106 is suitable for input control signals isolation of IPM.
This unit is MFSOP 6pin.
The detector has a totem pole output stage that provides source drive and sink drive, and built-in Schmitt trigger.
The detector IC has an internal shield that provides a guaranteed common mode transient immunity of 10kV/μs.
TLP106 is a buffer logic type.
For inverter logic type, TLP102 is in line-up.

- Buffer logic type (totem pole output)
- Guaranteed Performance Over temperature : -40~85°C
- Power Supply Voltage : -0.5~20V
- Input Current : IFLH=3mA(Max.)
- Switching Time (tpLH/tpHL) : 400ns(Max.)
- Common mode transient immunity : 10kV/us
- Isolation Voltage : 3750Vrms

## Truth Table

| Input | LED | Tr1 | Tr2 | Output |
|---|---|---|---|---|
| H | ON | ON | OFF | H |
| L | OFF | OFF | ON | L |

## Pin Configuration (top View)

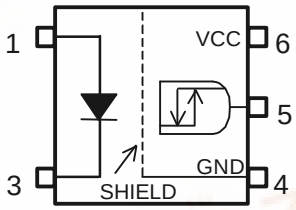


1:ANODE
3:CATHODE
4:GND
5:VO
6:VCC

## Schematic

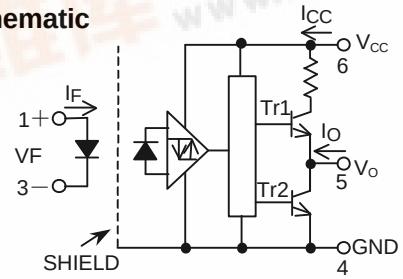


**0.1uF bypass capacitor must be connected between pin 6 and 4**

找PDF 维库一下 pdf.dzsc.com

## Recommended Operating Conditions

| CHARACTERISTIC | SYMBOL | MIN. | TYP. | MAX. | UNIT |
|---|---|---|---|---|---|
| Input Current , ON | IF(ON) | 5 | - | 10 | mA |
| Input Voltage , OFF | VF(OFF) | 0 | - | 0.8 | V |
| Supply Voltage | VCC | 4.5 | - | 20 | V |
| Operating Temperature | Topr | -40 | - | 85 | °C |

## Maximum Ratings (Ta=25°C)

| CHARACTERISTIC | | SYMBOL | RATING | UNIT |
|---|---|---|---|---|
| LED | Forward Current | IF | 20 | mA |
| | Peak Transient Forward Current (Note1) | IFPT | 1 | A |
| | Reverse Voltage | VR | 5 | V |
| DETECTOR | Output Current 1 (Ta=25°C) | IO1 | 15/-15 | mA |
| | Output Current 2 (Ta=85°C) | IO2 | 4.5/-4.5 | mA |
| | Peak Output Current | IOP | 20/-20 | mA |
| | Output Voltage | VO | -0.5~20 | V |
| | Supply Voltage | VCC | -0.5~20 | V |
| Operating Temperature Range | | Topr | -40~85 | °C |
| Storage Temperature Range | | Tstg | -55~125 | °C |
| Lead Solder Temperature(10s) | | Tsol | 260 | °C |
| Isolation Voltage (AC,1min.,R.H.=60%,Ta=25°C) (Note2) | | BVs | 3750 | Vrms |

Note1 : Pulse width PW=10us,500pps.

Note2 : Device Considered a two terminal device : pins 1 and 3 shorted together and pins 4,5 and 6 shorted together.

## Electrical Characteristics
### (Unless otherwise specified, Ta=-40 to 85°C,VCC=4.5~20V)

| CHARACTERISTIC | SYMBOL | CONDITION | | MIN. | TYP. | MAX. | UNIT |
|---|---|---|---|---|---|---|---|
| Input Forward Voltage | VF | IF=5mA ,T a=25°C | | - | 1.5 | 1.7 | V |
| Temperature Coefficient of Forward Voltage | ?VF/?Ta | IF=5mA | | - | -2.0 | - | mV/°C |
| Input Reverse Current | IR | VR=5V,Ta=25°C | | - | - | 10 | μA |
| Input Capacitance | CT | V=0,f=1MHz,Ta=25°C | | - | 30 | - | pF |
| Logic Low Output Voltage | VOL | IOL=3.5mA,VF=0.8V | | - | 0.1 | 0.35 | V |
| Logic High Output Voltage | VOH | IOH=-3.5mA,IF=5mA | VCC=5V | 2.4 | 2.58 | - | V |
| | | | VCC=20V | 17.4 | 18.1 | - | |
| Logic Low Supply Current | ICCL | VF=0V | VCC=20V , Ta=-40~85°C | - | - | 6.0 | mA |
| | | | VCC=5V , Ta= 25°C | - | 3.8 | 4.5 | |
| Logic High Supply Current | ICCH | IF=5mA | VCC=20V , Ta=-40~85°C | - | - | 6.0 | mA |
| | | | VCC=5V , Ta= 25°C | - | 3.8 | 4.5 | |
| Logic Low Short Circuit Output Current | IOSL | VF=0V<br>VCC=VO=20V | | 7 | 37 | - | mA |
| Logic High Short Circuit Output Current | IOSH | IF=5mA , VO=GND<br>VCC=20V | | -7 | 40 | - | mA |
| Input Current Logic High Output | IFLH | IO=-3.5mA,VO>2.4V | | - | 0.3 | 3 | mA |
| Input Voltage Logic Low Output | VFHL | IO=3.5mA,VO<0.4V | | 0.8 | - | - | V |
| Input Current Hysteresis | IHYS | VCC=5V | | - | 0.05 | - | mA |

*All typical values are at Ta=25°C,VCC=5V,IF=(ON)=5mA unless otherwise specified

## Isolation Characteristics (Ta = 25°C)

| Characteristic | Symbol | Test Condition | Min. | Typ. | Max. | Unit |
|---|---|---|---|---|---|---|
| Capacitance input to output | $C_S$ | V = 0,f = 1MHz (Note 2) | ? | 0.8 | ? | pF |
| Isolation resistance | $R_S$ | R.H. = 60%,$V_S$ = 500V (Note 2) | $1\times10^{12}$ | $10^{14}$ | ? | O |
| Isolation voltage | $BV_S$ | AC,1 minute | 3750 | ? | ? | $V_{rms}$ |
| | | AC,1 second,in oil | ? | 10000 | ? | Vdc |
| | | DC,1 minute,in oil | ? | 10000 | ? | |

## Switching Characteristics
## (Unless otherwise specified, Ta=-40 to 85°C,VCC=4.5~20V)

| CHARACTERISTIC | SYMBOL | TEST CIR-CUIT | CONDITION | MIN. | TYP. | MAX. | UNIT |
|---|---|---|---|---|---|---|---|
| Propagation Delay Time to Logic High output | tpLH | 1 | IF=0? 5mA CL=100pF | 50 | 250 | 400 | ns |
| Propagation Delay Time to Logic Low output | tpHL | | IF=5? 0mA CL=100pF | 50 | 270 | 400 | ns |
| Switching Time Dispersion between ON and OFF | \|tpHL-tpLH\| | | CL=100PF | - | - | 350 | ns |
| Output Rise Time | tr | | IF=0? 5mA,VCC=5V | - | 35 | - | ns |
| Output Fall Time | tf | | IF=5? 0mA,VCC=5V | - | 20 | - | ns |
| Common Mode transient Immunity at High Level Output | CMH | 2 | VCM=1000Vp-p,IF=5mA, VCC=20V,Ta=25°C | -10000 | - | - | V/us |
| Common Mode transient Immunity at Low Level Output | CML | | VCM=1000Vp-p,IF=0mA, VCC=20V,Ta=25°C | 10000 | - | - | V/us |

*All typical values are at Ta=25°C

**TEST CIRCUIT 1:Switching Time Test Circuit**

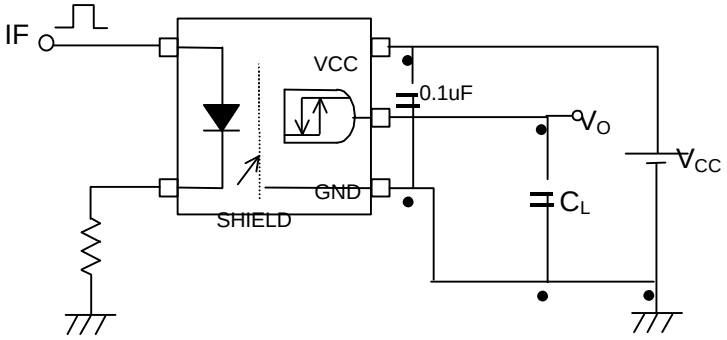


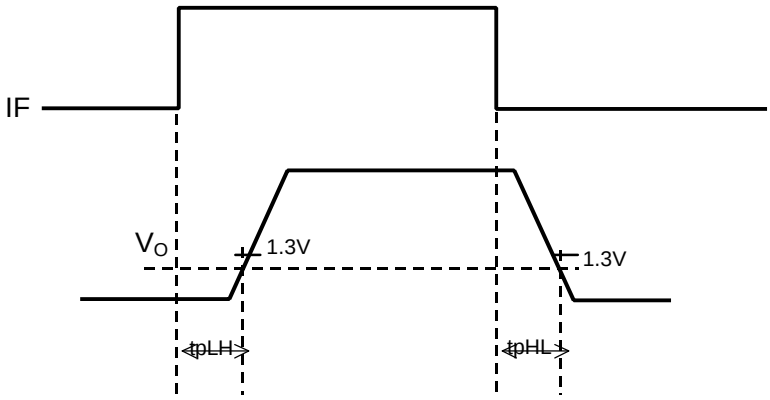

**TEST CIRCUIT 2:Common Mode Transient Immunity Test circuit**

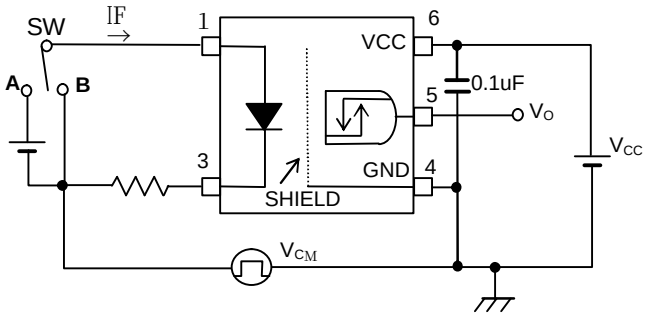


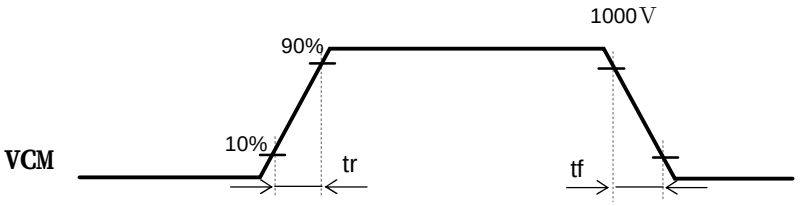


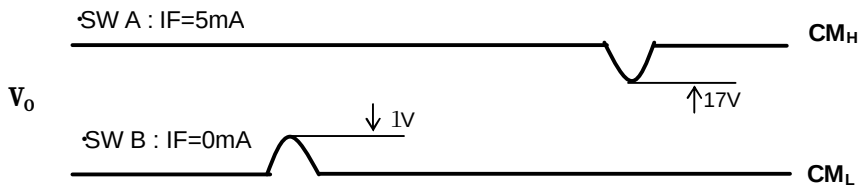


$$CM_H = \frac{800(V)}{tf(us)}$$

$$CM_L = \frac{800(V)}{tr(us)}$$

**VOL Test Circuit**

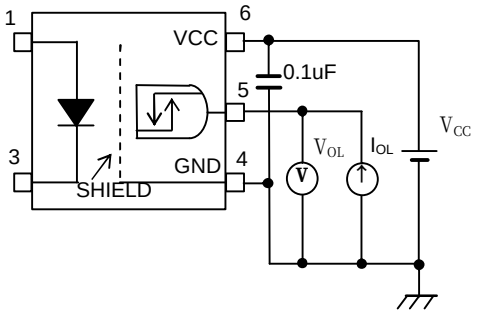


**VOH Test Circuit**

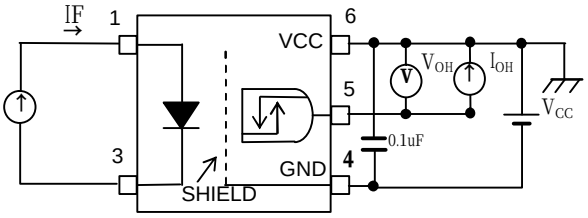


**IOSL Test Circuit**

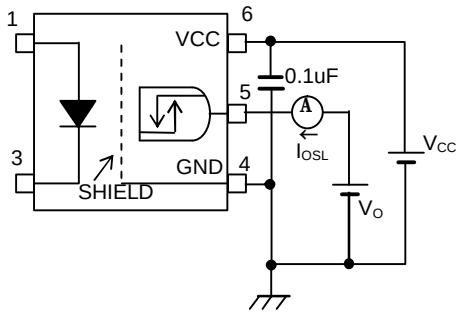


**IOSH Test Circuit**

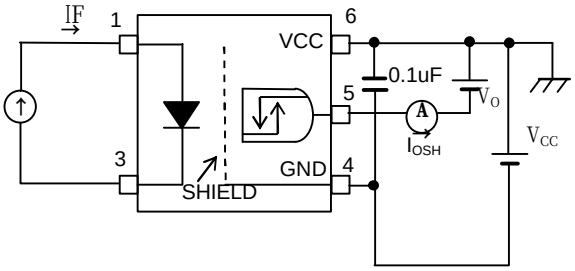

VOL - Ta

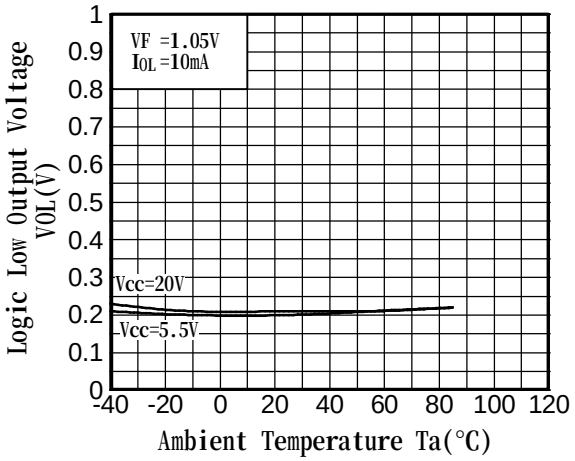


VOH - Ta

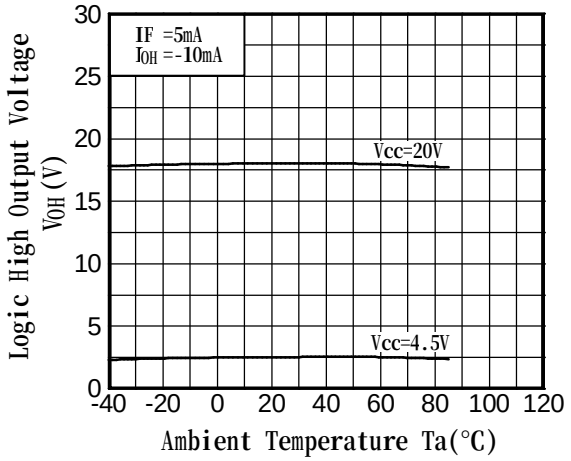


ICCL - Ta

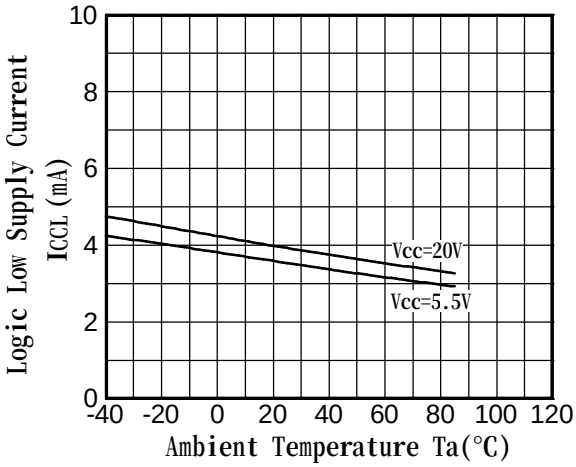


ICCH - Ta

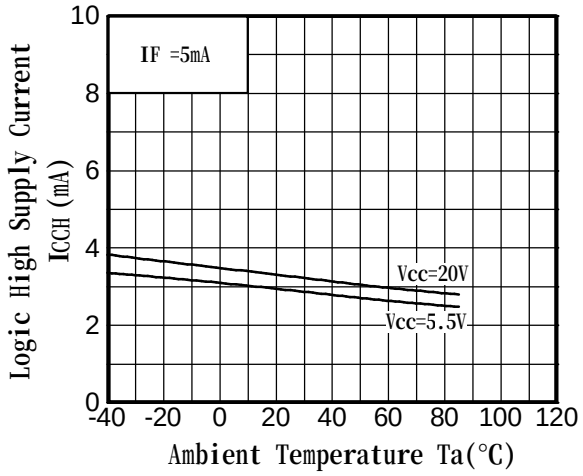


IOSL - Ta

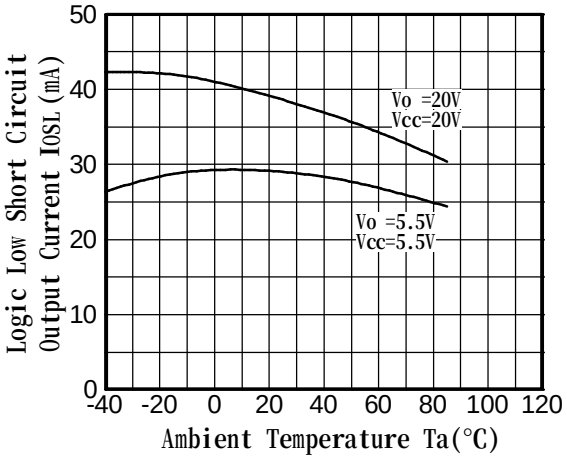


IOSH - Ta

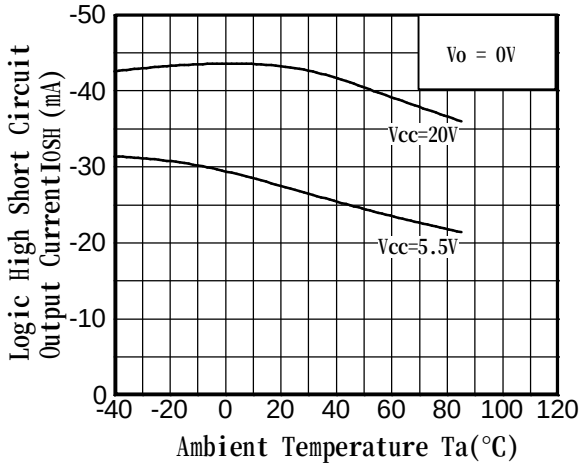

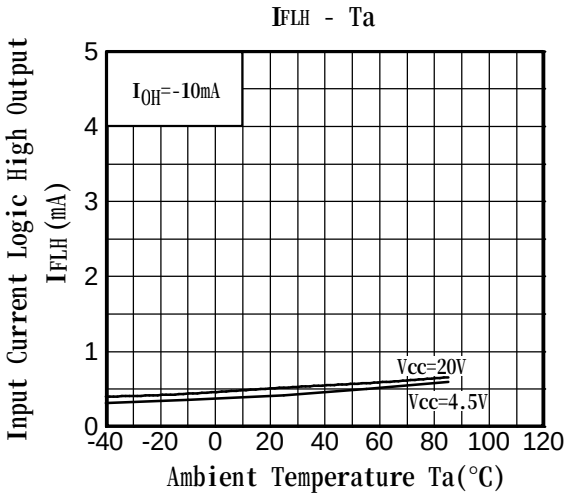
IFLH - Ta
IOH=-10mA
Vcc=20V
Vcc=4.5V
Input Current Logic High Output
IFLH (mA)
Ambient Temperature Ta(°C)
0
1
2
3
4
5
-40
-20
0
20
40
60
80
100
120

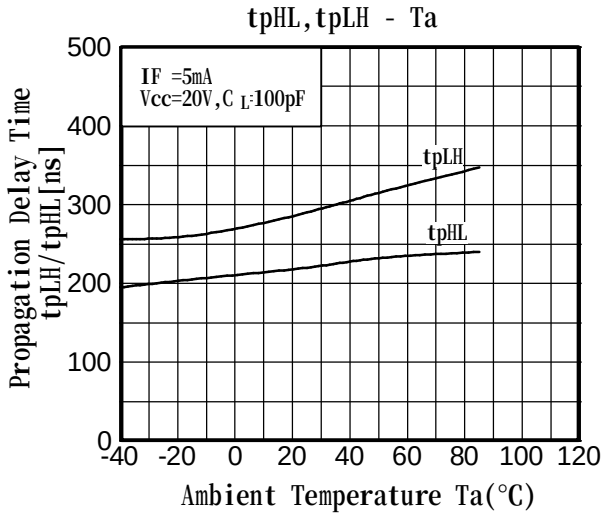
tpHL,tpLH - Ta
IF =5mA
Vcc=20V,CL:100pF
tpLH
tpHL
Propagation Delay Time
tpLH/tpHL[ns]
Ambient Temperature Ta(°C)
0
100
200
300
400
500
-40
-20
0
20
40
60
80
100
120

## RESTRICTIONS ON PRODUCT USE

030619EBC

- The information contained herein is subject to change without notice.
- The information contained herein is presented only as a guide for the applications of our products. No responsibility is assumed by TOSHIBA for any infringements of patents or other rights of the third parties which may result from its use. No license is granted by implication or otherwise under any patent or patent rights of TOSHIBA or others.
- TOSHIBA is continually working to improve the quality and reliability of its products. Nevertheless, semiconductor devices in general can malfunction or fail due to their inherent electrical sensitivity and vulnerability to physical stress. It is the responsibility of the buyer, when utilizing TOSHIBA products, to comply with the standards of safety in making a safe design for the entire system, and to avoid situations in which a malfunction or failure of such TOSHIBA products could cause loss of human life, bodily injury or damage to property.
  In developing your designs, please ensure that TOSHIBA products are used within specified operating ranges as set forth in the most recent TOSHIBA products specifications. Also, please keep in mind the precautions and conditions set forth in the "Handling Guide for Semiconductor Devices," or "TOSHIBA Semiconductor Reliability Handbook" etc..
- The TOSHIBA products listed in this document are intended for usage in general electronics applications (computer, personal equipment, office equipment, measuring equipment, industrial robotics, domestic appliances, etc.). These TOSHIBA products are neither intended nor warranted for usage in equipment that requires extraordinarily high quality and/or reliability or a malfunction or failure of which may cause loss of human life or bodily injury ("Unintended Usage"). Unintended Usage include atomic energy control instruments, airplane or spaceship instruments, transportation instruments, traffic signal instruments, combustion control instruments, medical instruments, all types of safety devices, etc.. Unintended Usage of TOSHIBA products listed in this document shall be made at the customer's own risk.
- The products described in this document are subject to the foreign exchange and foreign trade laws.
- TOSHIBA products should not be embedded to the downstream products which are prohibited to be produced and sold, under any law and regulations.
- GaAs(Gallium Arsenide) is used in this product. The dust or vapor is harmful to the human body. Do not break, cut, crush or dissolve chemically.