查询TMC93LC46供应商 捷多邦，专业PCB打样工厂，24小时加急出货

TMC 93LC46/56/57/66/86

1K/2K/2K/4K/16K-Bit Microwire Serial EEPROM

FEATURES

- **High speed operation:**
  - **93LC46/56/57/66 : 1MHz**
  - **93LC86 : 3MHz**
- **Low power CMOS technology**
- **1.8 to 6.0 volt operation**
- **Selectable x8 or x16 memory organization**
- **Self-timed write cycle with auto-clear**
- **Hardware and software write protection**
- **Power-up inadvertant write protection**
- **1,000,000 Program/erase cycles**
- **100 year data retention**
- **Commercial, industrial and automotive temperature ranges**
- **Sequential read (except TMC93LC46)**
- **Program enable (PE) pin (TMC93LC86 only)**

DESCRIPTION

The 93LC46/56/57/66/86 are 1K/2K/2K/4K/16K-bit Serial EEPROM memory devices which are configured as either registers of 16 bits (ORG pin at V_{CC}) or 8 bits (ORG pin at GND). Each register can be written (or read) serially by using the DI (or DO) pin. The 93LC46/56/57/66/86 are manufactured using TMC's advanced CMOS EEPROM floating gate technology. The devices are designed to endure 1,000,000 program/erase cycles and have a data retention of 100 years. The devices are available in 8-pin DIP, 8-pin SOIC or 8-pin TSSOP packages.

PIN CONFIGURATION

DIP Package (P, L)

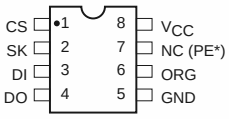

SOIC Package (J,W)

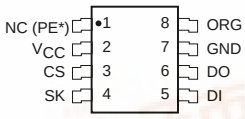

SOIC Package (S,V)

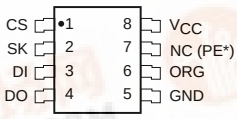

SOIC Package (K,X)

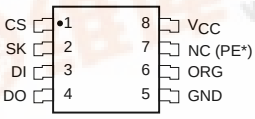

TSSOP Package (U,Y)**

PIN FUNCTIONS

Pin Name	Function
CS	Chip Select
SK	Clock Input
DI	Serial Data Input
DO	Serial Data Output
V_{CC}	+1.8 to 6.0V Power Supply
GND	Ground
ORG	Memory Organization
NC	No Connection
PE*	Program Enable

Note: When the ORG pin is connected to VCC, the x16 organization is selected. When it is connected to ground, the x8 pin is selected. If the ORG pin is left unconnected, then an internal pullup device will select the x16 organization.

BLOCK DIAGRAM

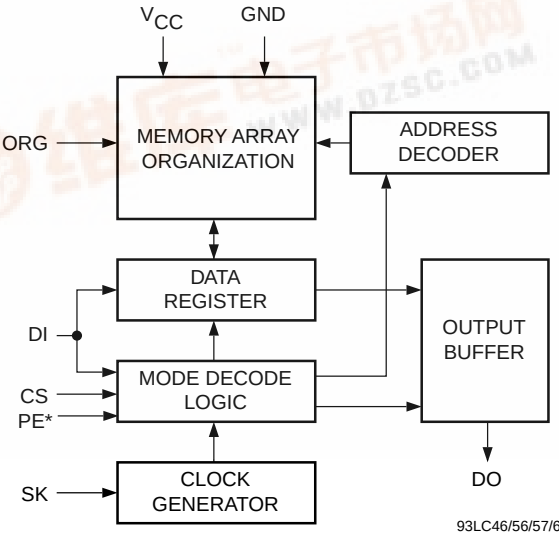

93LC46/56/57/66/86 F02

找PDF 维库一下 pdf.dzsc.com

ABSOLUTE MAXIMUM RATINGS*

Temperature Under Bias ..... -55°C to +125°C

Storage Temperature ..... -65°C to +150°C

Voltage on any Pin with Respect to Ground(1) ..... -2.0V to +V_{CC} +2.0V

V_{CC} with Respect to Ground ..... -2.0V to +7.0V

Package Power Dissipation Capability (T_A = 25°C) 1.0W

Lead Soldering Temperature (10 secs) ..... 300°C

Output Short Circuit Current(2) ..... 100 mA

*COMMENT

Stresses above those listed under “Absolute Maximum Ratings” may cause permanent damage to the device. These are stress ratings only, and functional operation of the device at these or any other conditions outside of those listed in the operational sections of this specification is not implied. Exposure to any absolute maximum rating for extended periods may affect device performance and reliability.

RELIABILITY CHARACTERISTICS

Symbol	Parameter	Reference Test Method	Min	Typ	Max	Units
N_{END}(3)	Endurance	MIL-STD-883, Test Method 1033	1,000,000			Cycles/Byte
T_{DR}(3)	Data Retention	MIL-STD-883, Test Method 1008	100			Years
V_{ZAP}(3)	ESD Susceptibility	MIL-STD-883, Test Method 3015	2000			Volts
I_{LTH}(3)(4)	Latch-Up	JEDEC Standard 17	100			mA

D.C. OPERATING CHARACTERISTICS

V_{CC} = +1.8V to +6.0V, unless otherwise specified.

Symbol	Parameter	Test Conditions	Min	Typ	Max	Units
I_{CC1}	Power Supply Current (Operating Write)	f_{SK} = 1MHz V_{CC} = 5.0V			3	mA
I_{CC2}	Power Supply Current (Operating Read)	f_{SK} = 1MHz V_{CC} = 5.0V			500	µA
I_{SB1}	Power Supply Current (Standby) (x8 Mode)	CS = 0V ORG=GND			10	µA
I_{SB2}(5)	Power Supply Current (Standby) (x16Mode)	CS=0V ORG=Float or V_{CC}			0	µA
I_{LI}	Input Leakage Current	V_{IN} = 0V to V_{CC}			1	µA
I_{LO}	Output Leakage Current (Including ORG pin)	V_{OUT} = 0V to V_{CC}, CS = 0V			1	µA
V_{IL1}	Input Low Voltage	4.5V ≤ V_{CC} < 5.5V	-0.1		0.8	V
V_{IH1}	Input High Voltage	4.5V ≤ V_{CC} < 5.5V	2		V_{CC} + 1	V
V_{IL2}	Input Low Voltage	1.8V ≤ V_{CC} < 4.5V	0		V_{CC} x 0.2	V
V_{IH2}	Input High Voltage	4.8V ≤ V_{CC} < 4.5V	V_{CC} x 0.7		V_{CC}+1	V
V_{OL1}	Output Low Voltage	4.5V ≤ V_{CC} < 5.5V I_{OL} = 2.1mA			0.4	V
V_{OH1}	Output High Voltage	4.5V ≤ V_{CC} < 5.5V I_{OH} = -400µA	2.4			V
V_{OL2}	Output Low Voltage	1.8V ≤ V_{CC} < 4.5V I_{OL} = 1mA			0.2	V
V_{OH2}	Output High Voltage	1.8V ≤ V_{CC} < 4.5V I_{OH} = -100µA	V_{CC} - 0.2			V

Note:
(1) The minimum DC input voltage is –0.5V. During transitions, inputs may undershoot to –2.0V for periods of less than 20 ns. Maximum DC voltage on output pins is V_{CC} +0.5V, which may overshoot to V_{CC} +2.0V for periods of less than 20 ns.
(2) Output shorted for no more than one second. No more than one output shorted at a time.
(3) This parameter is tested initially and after a design or process change that affects the parameter.
(4) Latch-up protection is provided for stresses up to 100 mA on address and data pins from –1V to V_{CC} +1V.
(5) Standby Current (ISB_2)=0µA (<900nA) for 93LC46/56/57/66, (ISB_2)=2µA for 93LC86.

PIN CAPACITANCE

Symbol	Test	Conditions	Min	Typ	Max	Units
C_{OUT}(3)	Output Capacitance (DO)	V_{OUT}=0V			5	pF
C_{IN}(3)	Input Capacitance (CS, SK, DI, ORG)	V_{IN}=0V			5	pF

INSTRUCTION SET

Instruction	Device Type	Start Bit	Opcode	Address		Data		Comments	PE(2)
				x8	x16	x8	x16		
READ	93LC46	1	10	A6-A0	A5-A0			Read Address AN–A0	
	93LC56(1)	1	10	A8-A0	A7-A0				
	93LC66	1	10	A8-A0	A7-A0				
	93LC57	1	10	A7-A0	A6-A0				
	93LC86	1	10	A10-A0	A9-A0				X
ERASE	93LC46	1	11	A6-A0	A5-A0			Clear Address AN–A0	
	93LC56(1)	1	11	A8-A0	A7-A0				
	93LC66	1	11	A8-A0	A7-A0				
	93LC57	1	11	A7-A0	A6-A0				
	93LC86	1	11	A10-A0	A9-A0				I
WRITE	93LC46	1	01	A6-A0	A5-A0	D7-D0	D15-D0	Write Address AN–A0	
	93LC56(1)	1	01	A8-A0	A7-A0	D7-D0	D15-D0		
	93LC66	1	01	A8-A0	A7-A0	D7-D0	D15-D0		
	93LC57	1	01	A7-A0	A6-A0	D7-D0	D15-D0		
	93LC86	1	01	A10-A0	A9-A0	D7-D0	D15-D0		I
EWEN	93LC46	1	00	11XXXXX	11XXXX			Write Enable	
	93LC56	1	00	11XXXXXXX	11XXXXXX				
	93LC66	1	00	11XXXXXXX	11XXXXXX				
	93LC57	1	00	11XXXXXX	11XXXXX				
	93LC86	1	00	11XXXXXXXXX	11XXXXXXXX				X
EWDS	93LC46	1	00	00XXXXX	00XXXX			Write Disable	
	93LC56	1	00	00XXXXXXX	00XXXXXX				
	93LC66	1	00	00XXXXXXX	00XXXXXX				
	93LC57	1	00	00XXXXXX	00XXXXX				
	93LC86	1	00	00XXXXXXXXX	00XXXXXXXX				X
ERAL	93LC46	1	00	10XXXXX	10XXXX			Clear All Addresses	
	93LC56	1	00	10XXXXXXX	10XXXXXX				
	93LC66	1	00	10XXXXXXX	10XXXXXX				
	93LC57	1	00	10XXXXXX	10XXXXX				
	93LC86	1	00	10XXXXXXXXX	10XXXXXXXX				I
WRAL	93LC46	1	00	01XXXXX	01XXXX	D7-D0	D15-D0	Write All Addresses	
	93LC56	1	00	01XXXXXXX	01XXXXXX	D7-D0	D15-D0		
	93LC66	1	00	01XXXXXXX	01XXXXXX	D7-D0	D15-D0		
	93LC57	1	00	01XXXXXX	01XXXXX	D7-D0	D15-D0		
	93LC86	1	00	01XXXXXXXXX	01XXXXXXXX	D7-D0	D15-D0		I

Note:
(1) Address bit A8 for 256x8 ORG and A7 for 128x16 ORG are "Don't Care" bits, but must be kept at either a "1" or "0" for READ, WRITE and ERASE commands.
(2) Applicable only to 93LC86
(3) This parameter is tested initially and after a design or process change that affects the parameter.

A.C. CHARACTERISTICS (93LC46/56/57/66)

SYMBOL	PARAMETER	Test Conditions	Limits						Units
			V_{CC} = 1.8V-6V		V_{CC} = 2.5V-6V		V_{CC} = 4.5V-5.5V		
			Min	Max	Min	Max	Min	Max	
t_{CSS}	CS Setup Time	C_L = 100pF (3)	200		100		50		ns
t_{CSH}	CS Hold Time		0		0		0		ns
t_{DIS}	DI Setup Time		400		200		100		ns
t_{DIH}	DI Hold Time		400		200		100		ns
t_{PD1}	Output Delay to 1			1		0.5		0.25	µs
t_{PD0}	Output Delay to 0			1		0.5		0.25	µs
t_{HZ}(1)	Output Delay to High-Z			400		200		100	ns
t_{EW}	Program/Erase Pulse Width			10		10		10	ms
t_{CSMIN}	Minimum CS Low Time		1		0.5		0.25		µs
t_{SKHI}	Minimum SK High Time		1		0.5		0.25		µs
t_{SKLOW}	Minimum SK Low Time		1		0.5		0.25		µs
t_{SV}	Output Delay to Status Valid			1		0.5		0.25	µs
SK_{MAX}	Maximum Clock Frequency		DC	250	DC	500	DC	1000	kHz

A.C. CHARACTERISTICS (93LC86)

SYMBOL	PARAMETER	Test Conditions	Limits						Units
			V_{CC} = 1.8V-6V		V_{CC} = 2.5V-6V		V_{CC} = 4.5V-5.5V		
			Min	Max	Min	Max	Min	Max	
t_{CSS}	CS Setup Time	C_L = 100pF (3)	200		100		50		ns
t_{CSH}	CS Hold Time		0		0		0		ns
t_{DIS}	DI Setup Time		200		100		50		ns
t_{DIH}	DI Hold Time		200		100		50		ns
t_{PD1}	Output Delay to 1			1		0.5		0.15	µs
t_{PD0}	Output Delay to 0			1		0.5		0.15	µs
t_{HZ}(1)	Output Delay to High-Z			400		200		100	ns
t_{EW}	Program/Erase Pulse Width			5		5		5	ms
t_{CSMIN}	Minimum CS Low Time		1		0.5		0.15		µs
t_{SKHI}	Minimum SK High Time		1		0.5		0.15		µs
t_{SKLOW}	Minimum SK Low Time		1		0.5		0.15		µs
t_{SV}	Output Delay to Status Valid			1		0.5		0.1	µs
SK_{MAX}	Maximum Clock Frequency		DC	500	DC	1000	DC	3000	kHz

NOTE:
(1) This parameter is tested initially and after a design or process change that affects the parameter.

POWER-UP TIMING (1)(2)

SYMBOL	PARAMETER	Max	Units
t_{PUR}	Power-up to Read Operation	1	ms
t_{PUW}	Power-up to Write Operation	1	ms

NOTE:
(1) This parameter is tested initially and after a design or process change that affects the parameter.
(2) t_{PUR} and t_{PUW} are the delays required from the time V_{CC} is stable until the specified operation can be initiated.
(3) The input levels and timing reference points are shown in “AC Test Conditions” table.

A.C. TEST CONDITIONS

Input Rise and Fall Times	≤ 50ns	
Input Pulse Voltages	0.4V to 2.4V	$4.5V \le V_{CC} \le 5.5V$
Timing Reference Voltages	0.8V, 2.0V	$4.5V \le V_{CC} \le 5.5V$
Input Pulse Voltages	$0.2V_{CC}$ to $0.7V_{CC}$	$1.8V \le V_{CC} \le 4.5V$
Timing Reference Voltages	$0.5V_{CC}$	$1.8V \le V_{CC} \le 4.5V$

DEVICE OPERATION

The 93LC46/56(57)66/86 is a 1024/2048/4096/16,384-bit nonvolatile memory intended for use with industry standard microprocessors. The 93LC46/56/57/66/86 can be organized as either registers of 16 bits or 8 bits. When organized as X16, seven 9-bit instructions for 93LC46;seven 10-bit instructions for 93LC57; seven 11-bit instructions for 93LC56 and 93LC66;seven 13-bit instructions for 93LC86; control the reading, writing and erase operations of the device. When organized as X8, seven 10-bit instructions for 93LC46; seven 11-bit instructions for 93LC57; seven 12-bit instructions for 93LC56 and 93LC66:seven 14-bit instructions for 93LC86; control the reading, writing and erase operations of the device. The 93LC46/56/57/66/86 operates on a single power supply and will generate on chip, the high voltage required during any write operation.

Instructions, addresses, and write data are clocked into the DI pin on the rising edge of the clock (SK). The DO pin is normally in a high impedance state except when reading data from the device, or when checking the ready/busy status after a write operation.

The ready/busy status can be determined after the start of a write operation by selecting the device (CS high) and polling the DO pin; DO low indicates that the write operation is not completed, while DO high indicates that the device is ready for the next instruction. If necessary, the DO pin may be placed back into a high impedance state during chip select by shifting a dummy “1” into the DI pin. The DO pin will enter the high impedance state on the falling edge of the clock (SK). Placing the DO pin into the high impedance state is recommended in applications where the DI pin and the DO pin are to be tied together to form a common DI/O pin.

Figure 1. Sychronous Data Timing

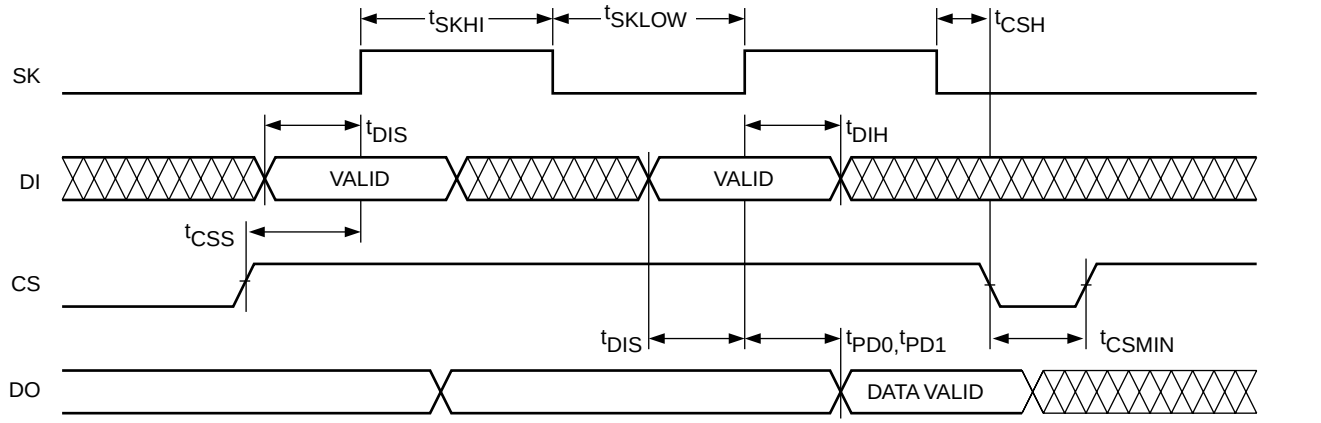

93LC46/56/57/66/86 F03

Figure 2a. Read Instruction Timing (93LC46)

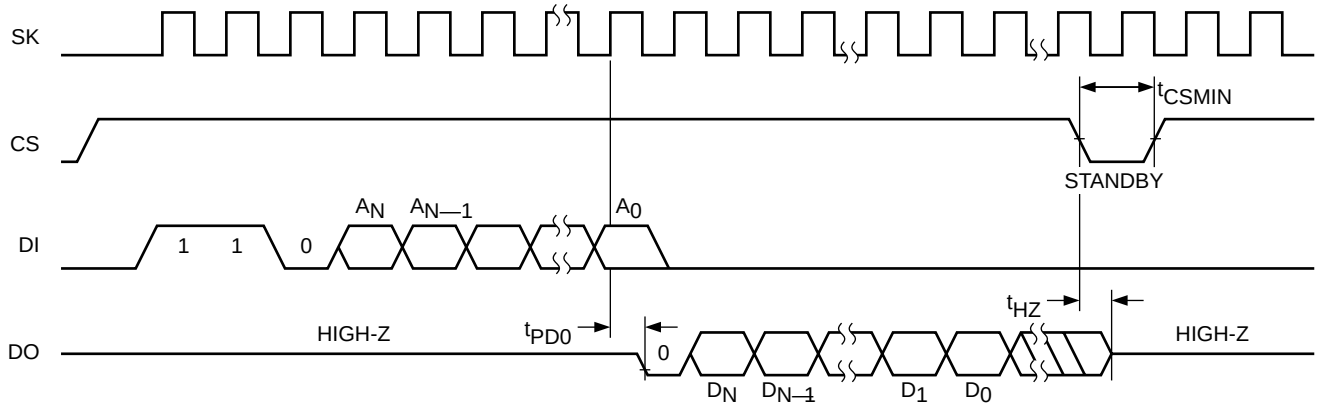

93LC46/56/57/66/86 F04

The format for all instructions sent to the device is a logical "1" start bit, a 2-bit (or 4-bit) opcode, 6-bit (93LC46)/ /7-bit (93LC57)/ 8-bit (93LC56 or 93LC66)/10-bit (93LC86) (an additional bit when organized X8) and for write operations a 16-bit data field (8-bit for X8 organizations).

Note: This note is applicable only to 93LC86. The Write, Erase, Write all and Erase all instructions require PE=1. If PE is left floating, 93C86 is in Program Enabled mode. For Write Enable and Write Disable instruction PE=don't care.

Read

Upon receiving a READ command and an address (clocked into the DI pin), the DO pin of the 93LC46/ 56/57/66/86 will come out of the high impedance state and, after sending an initial dummy zero bit, will begin shifting out the data addressed (MSB first). The output data bits will toggle on the rising edge of the SK clock and are stable after the specified time delay (t_{PD0} or t_{PD1}).

For the 93LC56/57/66/86, after the initial data word has been shifted out and CS remains asserted with the SK clock continuing to toggle, the device will automatically increment to the next address and shift out the next data word in a sequential READ mode. As long as CS is continuously asserted and SK continues to toggle, the device will keep incrementing to the next address automatically until it reaches to the end of the address space, then loops back to address 0. In the sequential READ mode, only the initial data word is preceeded by a dummy zero bit. All subsequent data words will follow without a dummy zero bit.

Write

After receiving a WRITE command, address and the data, the CS (Chip Select) pin must be deselected for a minimum of t_{CSMIN}. The falling edge of CS will start the self clocking clear and data store cycle of the memory location specified in the instruction. The clocking of the SK pin is not necessary after the device has entered the self clocking mode. The ready/busy status of the 93LC46/56/57/66/86 can be determined by selecting the device and polling the DO pin. Since this device features Auto-Clear before write, it is NOT necessary to erase a memory location before it is written into.

Figure 2b. Read Instruction Timing (93LC56/57/66/86)

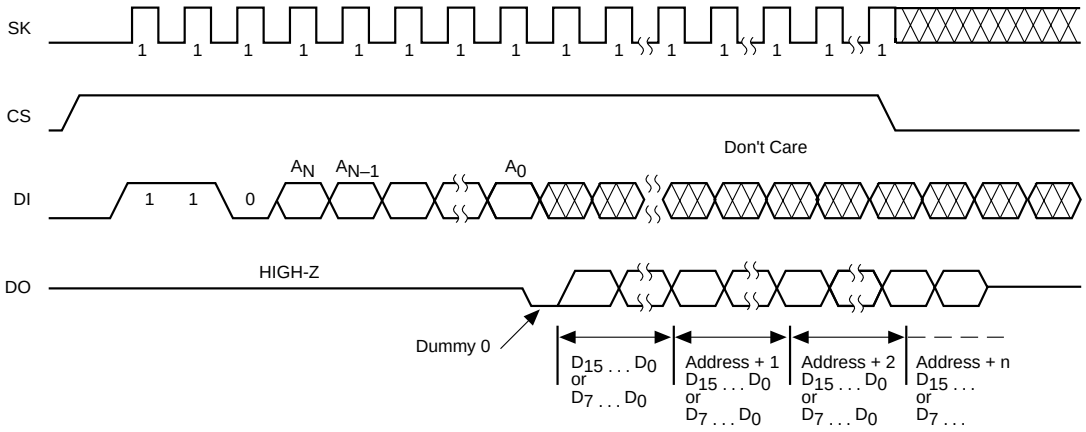

Figure 3. Write Instruction Timing

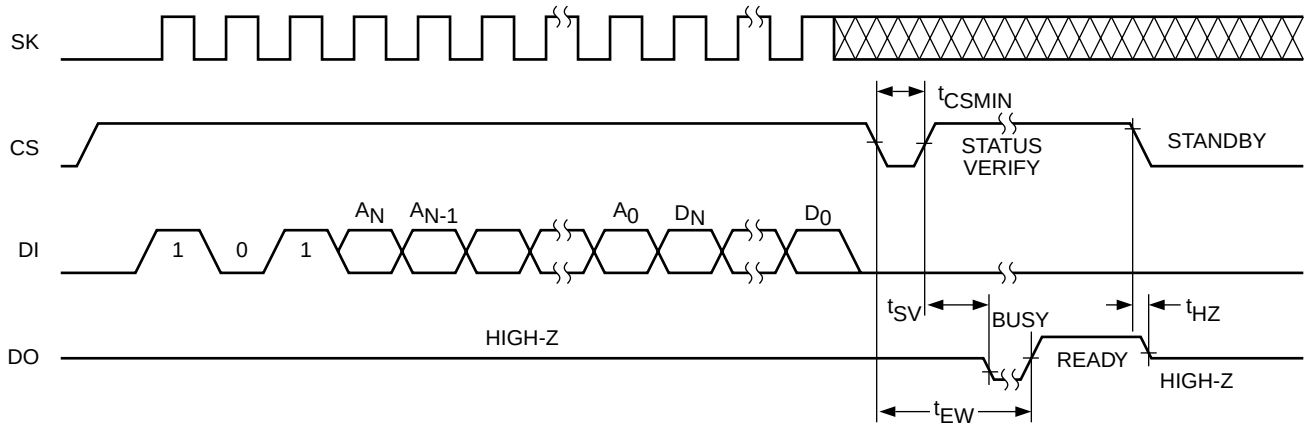

Erase

Upon receiving an ERASE command and address, the CS (Chip Select) pin must be deasserted for a minimum of t_{CSMIN}. The falling edge of CS will start the self clocking clear cycle of the selected memory location. The clocking of the SK pin is not necessary after the device has entered the self clocking mode. The ready/busy status of the 93LC46/56/57/66/86 can be determined by selecting the device and polling the DO pin. Once cleared, the content of a cleared location returns to a logical “1” state.

Erase/Write Enable and Disable

The 93LC46/56/57/66/86 powers up in the write disable state. Any writing after power-up or after an EWDS (write disable) instruction must first be preceded by the EWEN (write enable) instruction. Once the write instruction is enabled, it will remain enabled until power to the device is removed, or the EWDS instruction is sent. The EWDS instruction can be used to disable all 93LC46/56/57/66/86 write and clear instructions, and will prevent any accidental writing or clearing of the device. Data can be read normally from the device regardless of the write enable/disable status.

Erase All

Upon receiving an ERAL command, the CS (Chip Select) pin must be deselected for a minimum of t_{CSMIN}. The falling edge of CS will start the self clocking clear cycle of all memory locations in the device. The clocking of the SK pin is not necessary after the device has entered the self clocking mode. The ready/busy status of the 93LC46/56/57/66/86 can be determined by selecting the device and polling the DO pin. Once cleared, the contents of all memory bits return to a logical “1” state.

Write All

Upon receiving a WRAL command and data, the CS (Chip Select) pin must be deselected for a minimum of t_{CSMIN}. The falling edge of CS will start the self clocking data write to all memory locations in the device. The clocking of the SK pin is not necessary after the device has entered the self clocking mode. *(Note 1.)* The ready/busy status of the 93LC46/56/57/66/86 can be determined by selecting the device and polling the DO pin. It is not necessary for all memory locations to be cleared before the WRAL command is executed.

Figure 4. Erase Instruction Timing

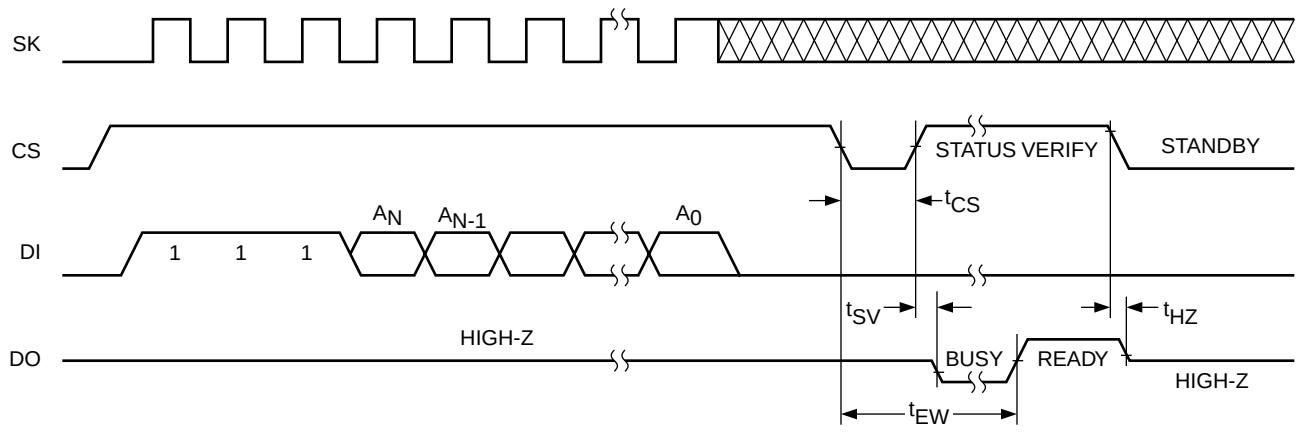

93LC46/56/57/66/86 F06

Figure 5. EWEN/EWDS Instruction Timing

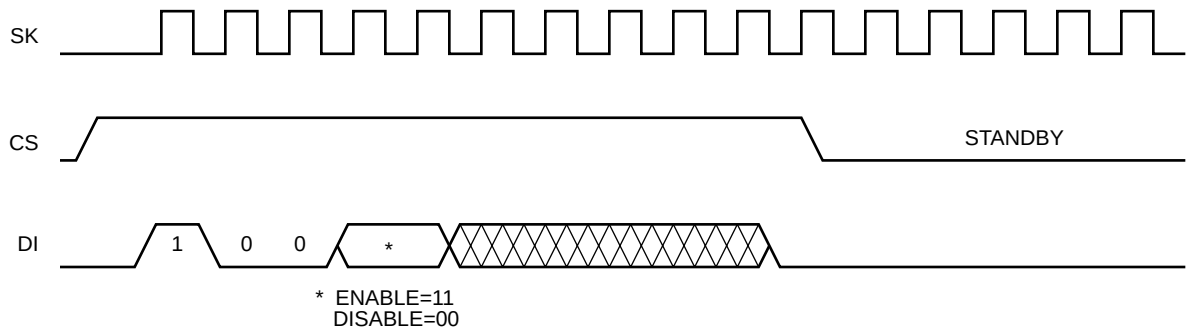

93LC46/56/57/66/86 F07

Figure 6. ERAL Instruction Timing

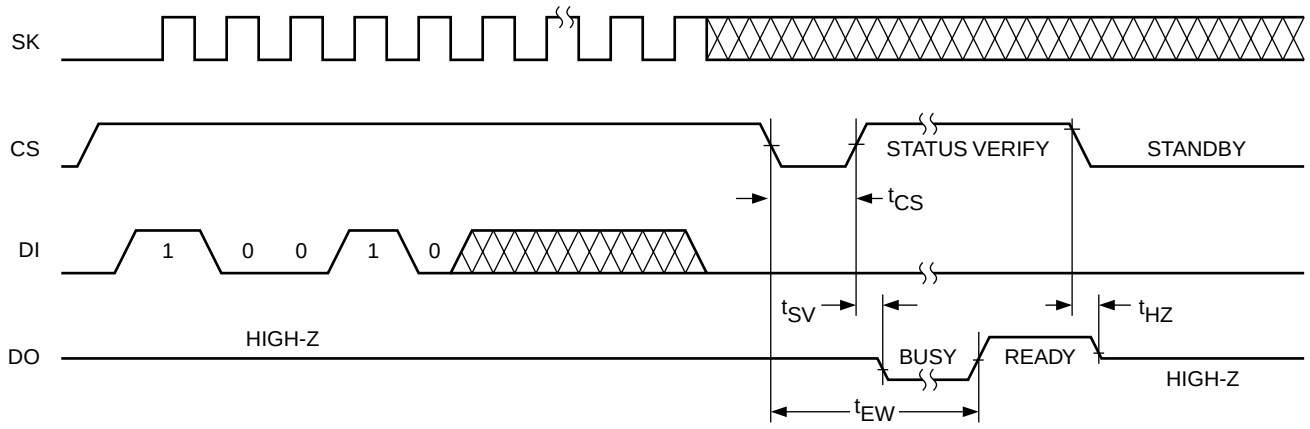

93LC46/56/57/66/86 F08

Figure 7. WRAL Instruction Timing

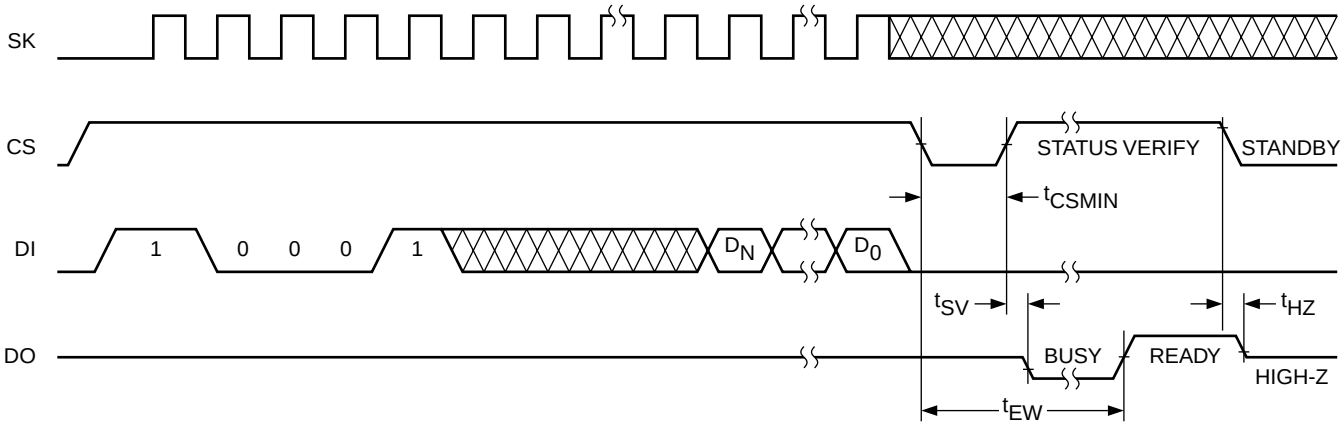

93LC46/56/57/66/86 F09

Plastic DIP Outline Dimensions

8-pin DIP (300mil) Outline Dimensions

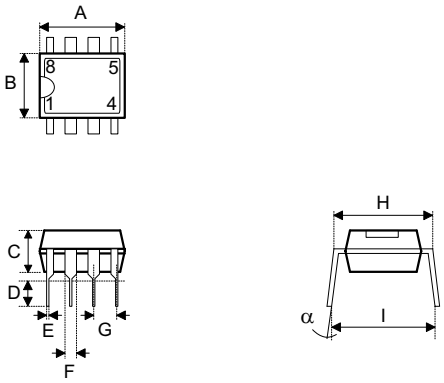

Symbol	Dimensions in mil		
	Min.	Nom.	Max.
A	355	—	375
B	240	—	260
C	125	—	135
D	125	—	145
E	16	—	20
F	50	—	70
G	—	100	—
H	295	—	315
I	335	—	375
α	0°	—	15°

SOP Outline Dimensions

8-pin SOP (150mil) Outline Dimensions

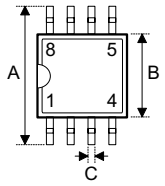

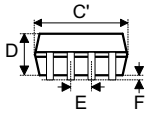

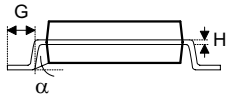

Symbol	Dimensions in mil		
	Min.	Nom.	Max.
A	228	—	244
B	149	—	157
C	14	—	20
C′	189	—	197
D	53	—	69
E	—	50	—
F	4	—	10
G	22	—	28
H	4	—	12
α	0°	—	10°

Carrier Tape Dimensions

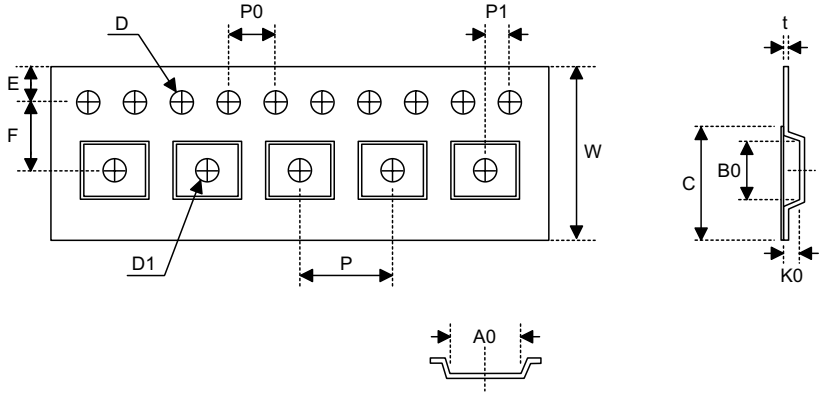

SOP 8N

Symbol	Description	Dimensions in mm
W	Carrier Tape Width	12.0+0.3 −0.1
P	Cavity Pitch	8.0±0.1
E	Perforation Position	1.75±0.1
F	Cavity to Perforation (Width Direction)	5.5±0.1
D	Perforation Diameter	1.55±0.1
D1	Cavity Hole Diameter	1.5+0.25
P0	Perforation Pitch	4.0±0.1
P1	Cavity to Perforation (Length Direction)	2.0±0.1
A0	Cavity Length	6.4±0.1
B0	Cavity Width	5.20±0.1
K0	Cavity Depth	2.1±0.1
t	Carrier Tape Thickness	0.3±0.05
C	Cover Tape Width	9.3

reel (4992x6996x2 tiff)

前端空格數	IC產品數	後端空格數
30 格	3000 格	70 格

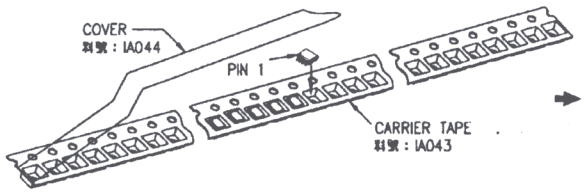

產品測試完成後與TAPE配置關係

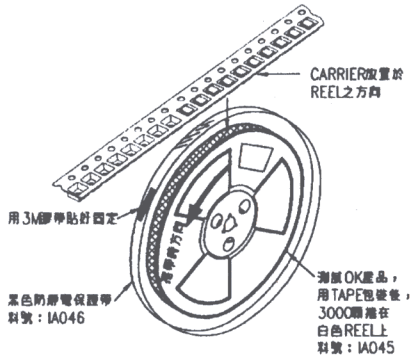

將測試OK產品之TAPE捲到REEL，
外圈再加一黑色防靜電保護帶加以固定

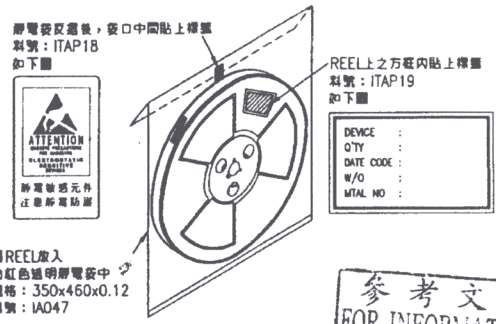

將REEL上方框內貼上標籤，
並放入防靜電袋內

參考文件章
FOR INFORMATION ONLY
JAN 15 2003
晶揚科技股份有限公司
TMC Doc. Control Center

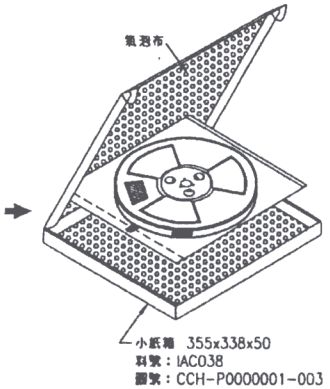

REEL貼標籤面朝上，放入小紙箱內

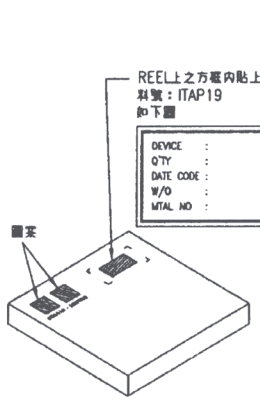

蓋上小紙箱後，標籤黏貼之位置

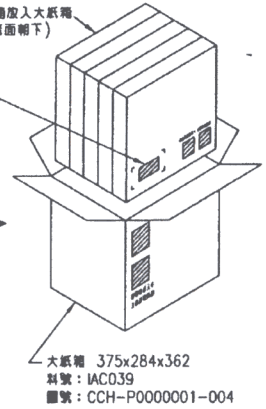

5只小紙箱標籤面向下放入大紙箱
不滿5只小紙箱者，仍需以大紙箱包裝
，並以靜電海棉填滿

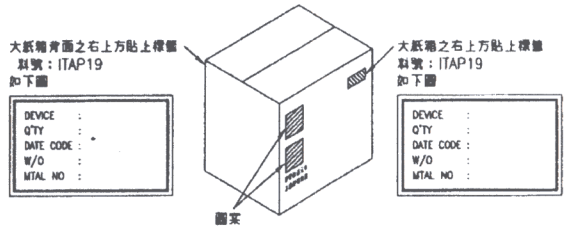

蓋上大紙箱後以膠帶封合，標籤黏貼之位置

NOTES：1.每一紙箱只能裝同一批產品．
2.同一晶圓批，須同時出貨．
3.尾數箱不能與他批產品併批包裝出貨．
4.測試完不滿3000顆之產品，不以REEL包裝仍以TUBE裝管入庫．

REV.	DESCRIPTION OF REVISION	SIGNATUBE/ DATE
3		
2		
1	增加標示和修改最後空格數．	JANE LIOU. 91/11/06

晶揚科技股份有限公司
Taiwan Micropaq Corporation

TITLE: 晶揚科技SOP 8L TAPE REEL標準包裝規範

DWG. NO.	FILE
FPK-TMCOP150-004 R1	E:\工程設計圖\包裝規範\FPK-SOP TAPE.DWG

DESIGNER DATE	MATERIAL	SCALE
JANE LIOU. 91/11/06	~	~
CHECKER DATE 11/6/02	PROCESSES ~	SHEET NO. 1 OF 1
APPROVED DATE 11/6/02	UNIT mm	Q'TY 1

THIRD ANGLE PROJECTION

ALL DIMENSIONS IN MILLIMETERS
XXXX ± .005
XXX ± .025
XX ± .100
X ± .250

sop (4992x6996x2 tiff)

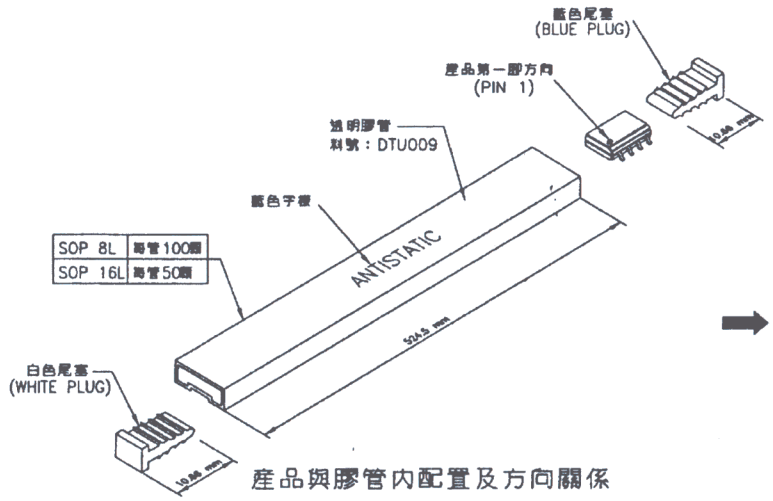

產品與膠管內配置及方向關係

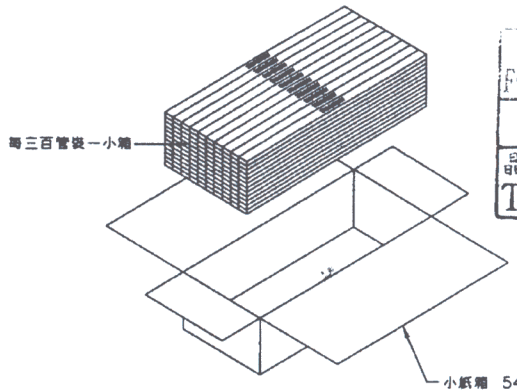

將管子放入小紙箱內
藍塞朝內箱標籤面
不需整齊排放

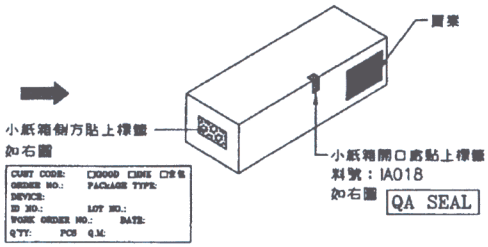

小紙箱標籤黏貼之位置
蓋上小紙箱盒蓋後，以透明膠帶封合

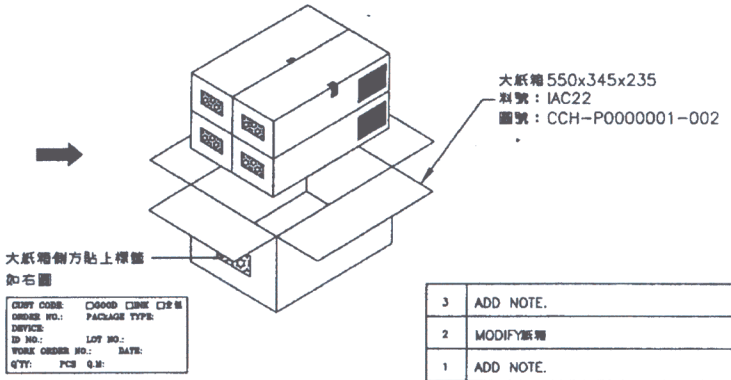

將四只小紙箱放入一只大紙箱內

註：(1) 每一小箱只能裝同一批產品．
(2) 不滿管時須反向放置於包裝箱內．
(3) 同一晶圓批，須同時出貨．
(4) 尾數箱同其包裝方式，小紙箱內之間隙部份亦以防靜電泡綿填充至飽和為止．
(5) 小箱之尾數箱均需以大箱包裝出貨。

FORM:EG00005.C

參考文件章
FOR INFORMATION ONLY
JAN 15 2003
晶揚科技股份有限公司
TMC Doc. Control Center

REV.	DESCRIPTION OF REVISION	SIGNATUBE/ DATE
3	ADD NOTE.	劉昭真 89/06/01
2	MODIFY紙箱	劉昭真 89/04/15
1	ADD NOTE.	劉昭真 11/30/99

晶揚科技股份有限公司
Taiwan Micropaq Corporation

TITLE: 晶揚科技標準包裝規範 FOR SOP 150 MILS.

DWG. NO.: FPK-TMCOP150-002 R3

FILE: FPK-P1503

DESIGNER / DATE	MATERIAL	SCALE
劉昭真 89/06/01		
CHECKER / DATE: C.M.Chang 89/06/01	PROCESSES	SHEET NO.: 1 OF 1
APPROVED / DATE: Andy 89/6/7	UNIT	

THIRD ANGLE PROJECTION

.XXXX ±.005
.XXX ±.025
.XX ±.100
.X ±.250
ALL DIMENSIONS IN MILLIMETERS.

dip (4992x6996x2 tiff)

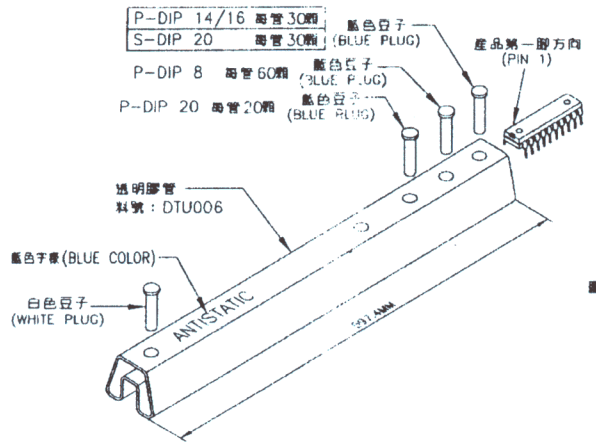

產品與膠管內配置及方向關係

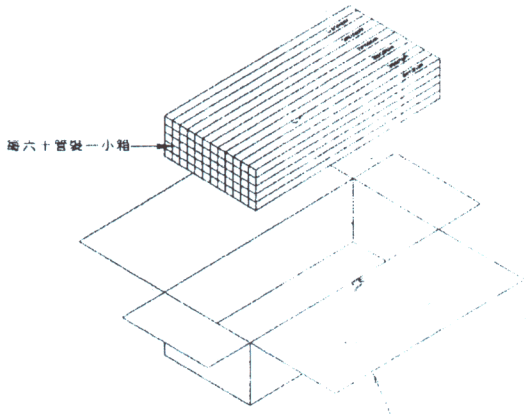

將管子放入小紙箱內
藍塞朝內箱標籤面 不需交錯排放

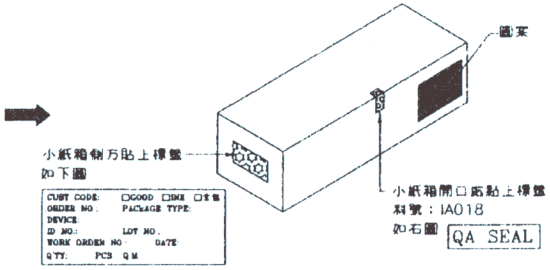

小紙箱標籤黏貼之位置
蓋上小紙箱盒蓋後，以透明膠帶封合

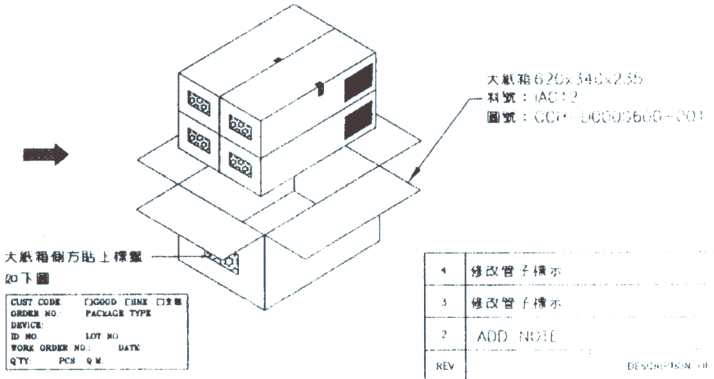

將四只小紙箱放入一只大紙箱內

註：(1) 每一小箱只能裝同一批產品。
(2) 不滿管時須反向放置於包裝箱內。
(3) 同一晶圓批，須同時出貨。
(4) 尾數箱同其包裝方式，箱內之間隙部份亦以防靜電泡綿填充至飽和為止。
(5) 小箱之尾數箱均需以大箱包裝出貨。

REV	DESCRIPTION OF REVISION	DATE
4	修改管子標示	
3	修改管子標示	
2	ADD NOTE	

晶揚科技股份有限公司
Taiwan Microsag Corporation

DWG NO	FPK-TMC08300 002 R4
DESIGNER / DATE	劉昭貴 90/11/05
CHECKED	陳力輝
APPROVED / DATE	Robert
TITLE	晶揚科技標準包裝規範 FOR P-DIP 300MILS
FILE	FPK-TMC-02
SCALE	NONE
UNIT	MM

THIRD ANGLE PROJECTION ALL DIMENSIONS IN MILLIMETERS

考文件-主
FOR INFORMATION ONLY
JUN 07. 2002
晶揚科技股份有限公司
TMC Doc. Control Center

FORM:EG00005.C