查询TPA005D12供应商 捷多邦，专业PCB打样工厂，24小时加急出货

TPA005D12
2-W STEREO CLASS-D AUDIO POWER AMPLIFIER

SLOS241B – AUGUST 1999 – REVISED MARCH 2000

NOT RECOMMENDED FOR NEW DESIGNS

- **Choose TPA2000D2 For Upgrade**
- **Extremely Efficient Class-D Stereo Operation**
- **Drives L and R Channels**
- **2-W BTL Output Into 4 Ω**
- **5-W Peak Music Power**
- **Fully Specified for 5-V Operation**
- **Low Quiescent Current**
- **Shutdown Control . . . 0.2 μA**
- **Thermally-Enhanced PowerPAD™ Surface-Mount Packaging**
- **Thermal, Over-Current, and Under-Voltage Protection**

DCA PACKAGE
(TOP VIEW)

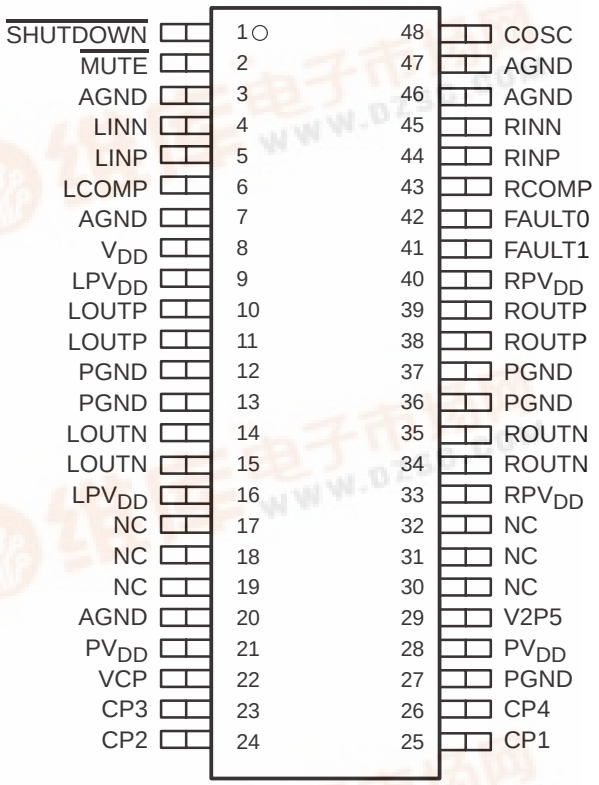

NC – No internal connection

description

The TPA005D12 is a monolithic power IC stereo audio amplifier that operates in extremely efficient Class-D operation, using the high switching speed of power DMOS transistors to replicate the analog input signal through high-frequency switching of the output stage. This allows the TPA005D12 to be configured as a bridge-tied load (BTL) amplifier capable of delivering up to 2 W of continuous average power into a 4-Ω load at 0.5% THD+N from a 5-V power supply in the high-fidelity audio frequency range (20 Hz to 20 kHz). A BTL configuration eliminates the need for external coupling capacitors on the output. A chip-level shutdown control is provided to limit total quiescent current to 0.2 μA, making the device ideal for battery-powered applications.

A full range of protection circuitry is included to increase device reliability: thermal, over-current, and under-voltage shutdown, with two status feedback terminals for use when any error condition is encountered.

The high switching frequency of the TPA005D12 allows the output filter to consist of three small capacitors and two small inductors per channel. The high switching frequency also allows for good THD+N performance.

The TPA005D12 is offered in the thermally enhanced 48-pin PowerPAD TSSOP surface-mount package (designator DCA).

AVAILABLE OPTIONS

T_A	PACKAGED DEVICES
	TSSOP† (DCA)
–40°C to 125°C	TPA005D12DCA

† The DCA package is available in left-ended tape and reel. To order a taped and reeled part, add the suffix R to the part number (e.g., TPA005D12DCAR).

Please be aware that an important notice concerning availability, standard warranty, and use in critical applications of Texas Instruments semiconductor products and disclaimers thereto appears at the end of this data sheet.

PowerPAD is a trademark of Texas Instruments Incorporated.

PRODUCTION DATA information is current as of publication date. Products conform to specifications per the terms of Texas Instruments standard warranty. Production processing does not necessarily include testing of all parameters.

Copyright © 2000, Texas Instruments Incorporated

schematic

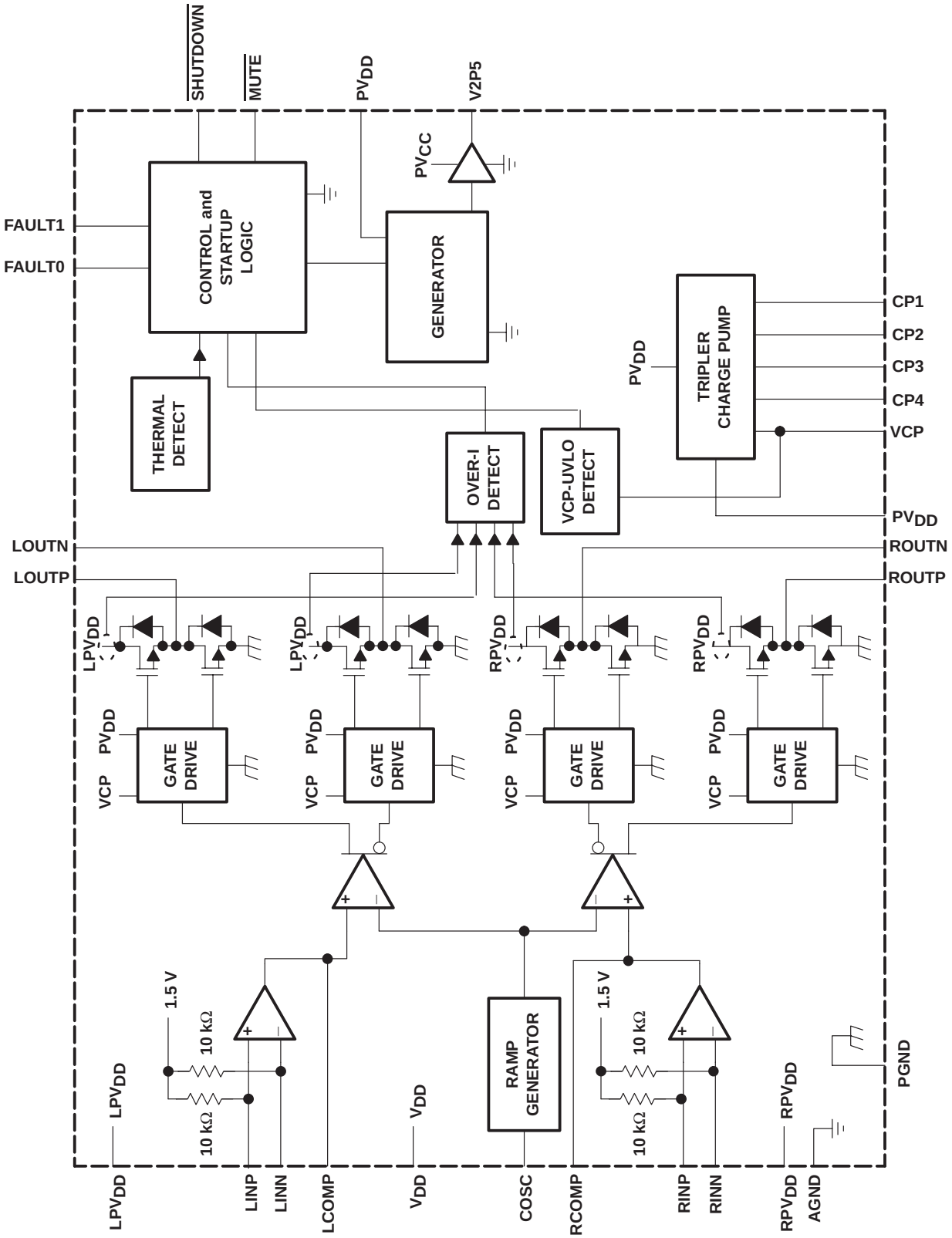

NOTE A: LPV_{DD}, RPV_{DD}, V_{DD}, and PV_{DD} are externally connected. AGND and PGND are externally connected.

Terminal Functions

TERMINAL NAME	TERMINAL NO.	DESCRIPTION
AGND	3, 7, 20, 46, 47	Analog ground for headphone and Class-D analog sections
COSC	48	Capacitor I/O for ramp generator. Adjust the capacitor size to change the switching frequency.
CP1	25	First diode node for charge pump
CP2	24	First inverter switching node for charge pump
CP3	23	Second diode node for charge pump
CP4	26	Second inverter switching node for charge pump
FAULT0	42	Logic level fault0 output signal. Lower order bit of the two fault signals with open drain output.
FAULT1	41	Logic level fault1 output signal. Higher order bit of the two fault signals with open drain output.
LCOMP	6	Compensation capacitor terminal for left-channel Class-D amplifier
LINN	4	Class-D left-channel negative input
LINP	5	Class-D left-channel positive input
LOUTN	14, 15	Class-D amplifier left-channel negative output of H-bridge
LOUTP	10, 11	Class-D amplifier left-channel positive output of H-bridge
LPV_{DD}	9, 16	Class-D amplifier left-channel power supply
$\overline{MUTE}$	2	Active-low logic-level mute input signal. When $\overline{MUTE}$ is held low, the selected amplifier is muted. When $\overline{MUTE}$ is held high, the device operates normally. When the Class-D amplifier is muted, the low-side output transistors are turned on, shorting the load to ground.
NC	17, 18, 19, 30, 31, 32	No connection
PGND	12, 13	Power ground for left-channel H-bridge only
PGND	27	Power ground for charge pump only
PGND	36, 37	Power ground for right-channel H-bridge only
PV_{DD}	21, 28	V_{DD} supply for charge-pump and gate-drive circuitry
RCOMP	43	Compensation capacitor terminal for right-channel Class-D amplifier
RINN	45	Class-D right-channel negative input
RINP	44	Class-D right-channel positive input
RPV_{DD}	33, 40	Class-D amplifier right-channel power supply
ROUTN	34, 35	Class-D amplifier right-channel negative output of H-bridge
ROUTP	38, 39	Class-D amplifier right-channel positive output of H-bridge
$\overline{SHUTDOWN}$	1	Active-low logic-level shutdown input signal. When $\overline{SHUTDOWN}$ is held low, the device goes into shutdown mode. When $\overline{SHUTDOWN}$ is held at logic high, the device operates normally.
V2P5	29	2.5-V internal reference bypass
VCP	22	Storage capacitor terminal for charge pump
V_{DD}	8	V_{DD} bias supply for analog circuitry. This terminal needs to be well filtered to prevent degrading the device performance.

Class-D amplifier faults

Table 1. Class-D Amplifier Fault Table

FAULT 0†	FAULT 1†	DESCRIPTION
1	1	No fault. — The device is operating normally.
0	1	Charge pump under-voltage lock-out (VCP-UV) fault. — All low-side transistors are turned on, shorting the load to ground. Once the charge pump voltage is restored, normal operation resumes, but FAULT1 is still active. FAULT1 is cleared by cycling $\overline{\text{MUTE}}$, $\overline{\text{SHUTDOWN}}$, or the power supply.
1	0	Over-current fault. — The output transistors are all switched off. This causes the load to be in a high-impedance state. This is a latched fault and is cleared by cycling $\overline{\text{MUTE}}$, $\overline{\text{SHUTDOWN}}$, or the power supply.
0	0	Thermal fault. — All the low-side transistors are turned on, shorting the load to ground. This is latched fault and is cleared by cycling $\overline{\text{MUTE}}$, $\overline{\text{SHUTDOWN}}$, or the power supply.

† These logic levels assume a pullup to PV_{DD} from the open-drain outputs.

absolute maximum ratings over operating free-air temperature range, T_C = 25°C (unless otherwise noted)‡

Supply voltage, V_{DD} (PV_{DD}, LPV_{DD}, RPV_{DD}, V_{DD}) . . . . . 5.5 V
Input voltage, V_I ($\overline{\text{SHUTDOWN}}$, $\overline{\text{MUTE}}$) . . . . . –0.3 V to 5.8 V
Output current, I_O (FAULT0, FAULT1), open drain terminated . . . . . 1 mA
Charge pump voltage, V_{CP} . . . . . PV_{DD} + 15 V
Continuous H-bridge output current . . . . . 2 A
Pulsed H-Bridge output current, each output, I_{max} (see Note 1) . . . . . 5 A
Continuous total power dissipation . . . . . See Dissipation Ratings Table
Operating virtual junction temperature range, T_J . . . . . –40°C to 150°C
Operating case temperature range, T_C . . . . . –40°C to 125°C
Storage temperature range, T_{stg} . . . . . –40°C to 150°C
Lead temperature 1,6 mm (1/16 inch) from case for 10 seconds . . . . . 260°C

† Stresses beyond those listed under "absolute maximum ratings" may cause permanent damage to the device. These are stress ratings only, and functional operation of the device at these or any other conditions beyond those indicated under "recommended operating conditions" is not implied. Exposure to absolute-maximum-rated conditions for extended periods may affect device reliability.
NOTE 1: Pulse duration = 10 ms, duty cycle ≤ 2%

DISSIPATION RATING TABLE

PACKAGE	T_A ≤ 25°C† POWER RATING	DERATING FACTOR ABOVE T_A = 25°C	T_A = 70°C POWER RATING	T_A = 85°C POWER RATING	T_A = 125°C POWER RATING
DCA	5.6 W	44.8 mW/°C	3.6 W	2.9 W	1.1 mW

† Please see the Texas Instruments document, *PowerPAD Thermally Enhanced Package Application Report* (literature number SLMA002), for more information on the PowerPAD package. The thermal data was measured on a PCB layout based on the information in the section entitled *Texas Instruments Recommended Board for PowerPAD* on page 33 of the before mentioned document.

recommended operating conditions

	MIN	NOM	MAX	UNIT
Supply voltage, PV_{DD}, LPV_{DD}, RPV_{DD}, V_{DD}	4.5		5.5	V
High-level input voltage, V_{IH}	4.25			V
Low-level input voltage, V_{IL}			0.75	V
Audio inputs, LINN, LINP, RINN, RINP, differential input voltage			1	V_{RMS}
PWM frequency	150		450	kHZ

electrical characteristics, Class-D amplifier, $V_{DD} = PV_{DD} = LPV_{DD} = RPV_{DD} = 5$ V, $R_L = 4\ \Omega$, $T_C = 25°C$, See Figure 1 (resistive load) (unless otherwise noted)

PARAMETER		TEST CONDITIONS	MIN	TYP	MAX	UNIT
PSRR	Power supply rejection ratio	$V_{DD} = PV_{DD} = LPV_{DD} = RPV_{DD} = 4.5$ V to 5.5 V		40		dB
I_{DD}	Supply current	No load, No filter		25	35	mA
I_{DD}(MUTE)	Supply current, mute mode	$\overline{MUTE} = 0$ V		3.9	10	mA
I_{DD}(SD)	Supply current, shutdown mode	$\overline{SHUTDOWN} = 0$ V		0.2	10	µA
I_{IH}	High-level input current	$V_{IH} = 5.3$ V			1	µA
I_{IL}	Low-level input current	$V_{IL} = -0.3$ V			–1	µA
$r_{DS(on)}$	Total static drain-to-source on-state resistance (low-side plus high-side FETs)	$I_D = 2$ A		700	900	mΩ
$r_{DS(on)}$	Matching, high-side to high-side, low-side to low-side, same channel	$I_D = 0.5$ A	95%	99%		

operating characteristics, Class-D amplifier, $V_{DD} = PV_{DD} = LPV_{DD} = RPV_{DD} = 5$ V, $R_L = 4\ \Omega$, $T_C = 25°C$, See Figure 1 (unless otherwise noted)

PARAMETER		TEST CONDITIONS	MIN	TYP	MAX	UNIT
P_O	RMS output power, THD = 0.5%, per channel			2		W
THD+N	Total harmonic distortion plus noise	$P_O = 1$ W, f = 1 kHz		0.2%		
	Efficiency	$P_O = 1$ W, $R_L = 8\ \Omega$		80%		
A_V	Gain			25		dB
	Left/right channel gain matching		95%	99%		
	Noise floor			–55		dBV
	Dynamic range			70		dB
	Crosstalk	f = 1 kHz		–55		dB
	Frequency response bandwidth, post output filter, –3 dB		20		20000	Hz
B_{OM}	Maximum output power bandwidth				20	kHz

thermal resistance

PARAMETER		TEST CONDITIONS	MIN	TYP	MAX	UNIT
$R_{\theta JP}$	Thermal resistance, junction-to-pad				10	°C/W
	Thermal shutdown temperature			165		°C

PARAMETER MEASUREMENT INFORMATION

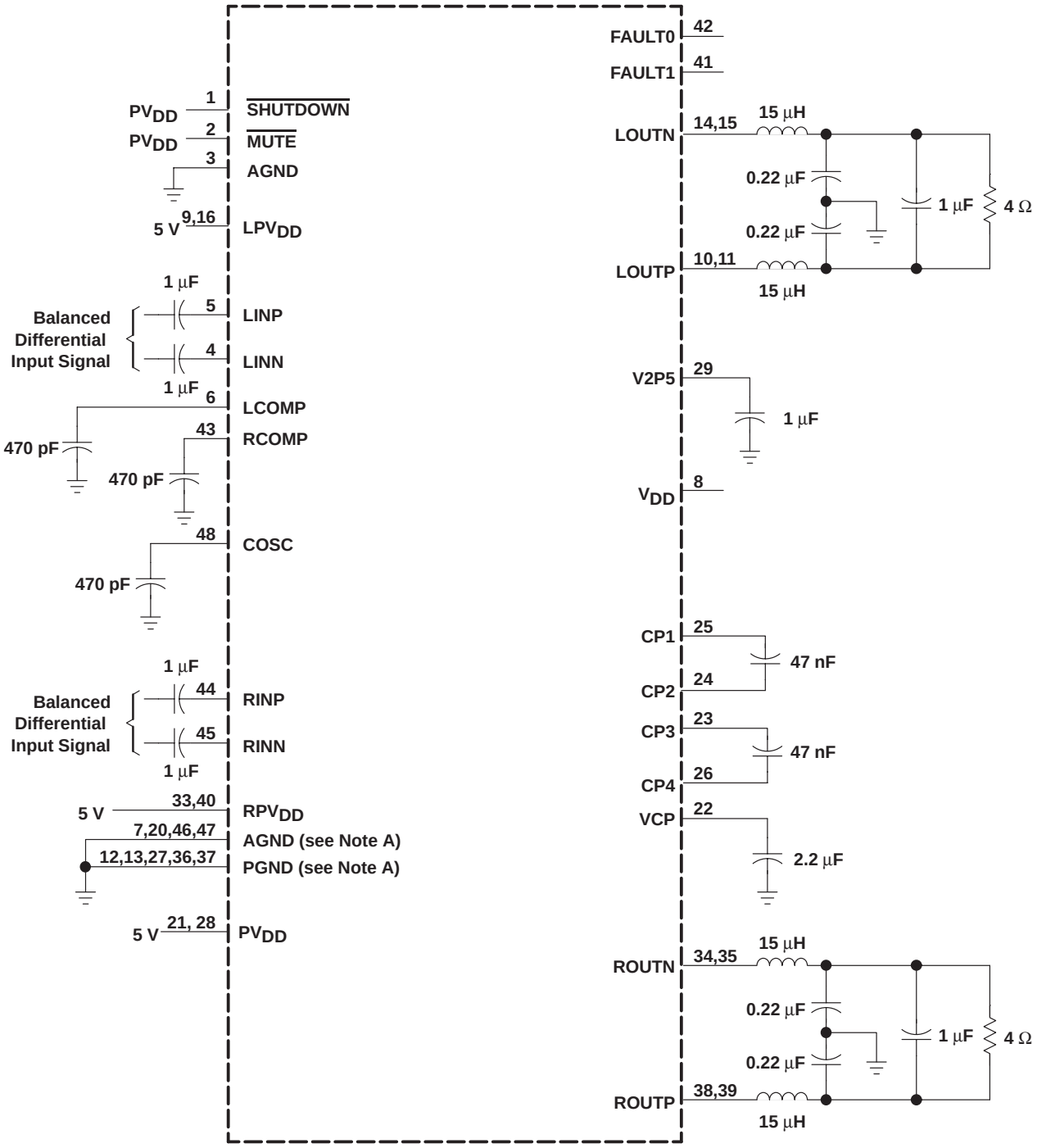

Figure 1. 5-V, 4-Ω Test Circuit, Class-D Amplifier

MECHANICAL DATA

DCA (R-PDSO-G)** **PowerPAD™ PLASTIC SMALL-OUTLINE PACKAGE**

48 PINS SHOWN

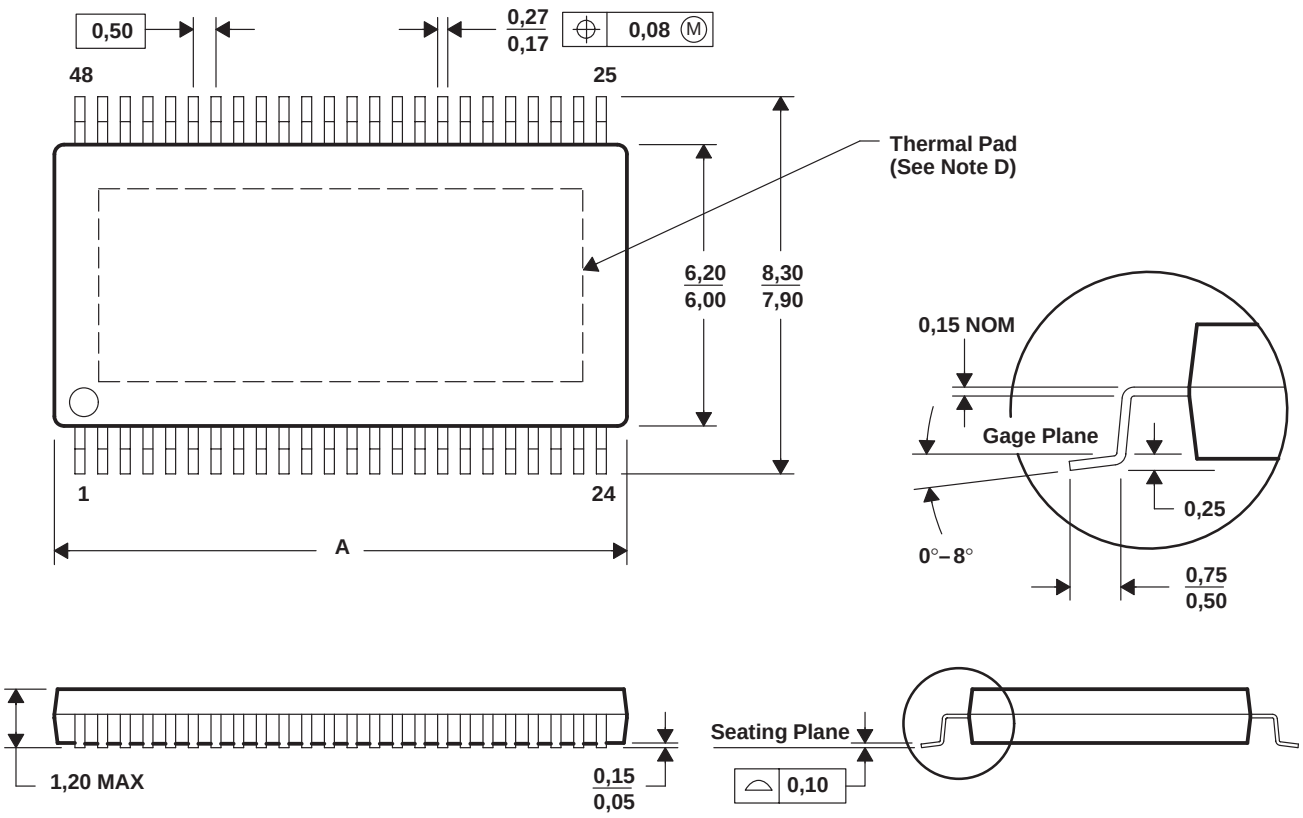

DIM \ PINS **	48	56	64
A MAX	12,60	14,10	17,10
A MIN	12,40	13,90	16,90

4073259/A 01/98

NOTES: A. All linear dimensions are in millimeters.
B. This drawing is subject to change without notice.
C. Body dimensions do not include mold flash or protrusion not to exceed 0,15.
D. The package thermal performance may be enhanced by bonding the thermal pad to an external thermal plane. This pad is electrically and thermally connected to the backside of the die and possibly selected leads.
E. Falls within JEDEC MO-153

PowerPAD is a trademark of Texas Instruments.

IMPORTANT NOTICE

Texas Instruments and its subsidiaries (TI) reserve the right to make changes to their products or to discontinue any product or service without notice, and advise customers to obtain the latest version of relevant information to verify, before placing orders, that information being relied on is current and complete. All products are sold subject to the terms and conditions of sale supplied at the time of order acknowledgment, including those pertaining to warranty, patent infringement, and limitation of liability.

TI warrants performance of its semiconductor products to the specifications applicable at the time of sale in accordance with TI's standard warranty. Testing and other quality control techniques are utilized to the extent TI deems necessary to support this warranty. Specific testing of all parameters of each device is not necessarily performed, except those mandated by government requirements.

Customers are responsible for their applications using TI components.

In order to minimize risks associated with the customer's applications, adequate design and operating safeguards must be provided by the customer to minimize inherent or procedural hazards.

TI assumes no liability for applications assistance or customer product design. TI does not warrant or represent that any license, either express or implied, is granted under any patent right, copyright, mask work right, or other intellectual property right of TI covering or relating to any combination, machine, or process in which such semiconductor products or services might be or are used. TI's publication of information regarding any third party's products or services does not constitute TI's approval, warranty or endorsement thereof.

Copyright © 2000, Texas Instruments Incorporated