查询TR600-150供应商 捷多邦，专业PCB打样工厂，24小时加急出货

Tyco / Electronics
Raychem Circuit Protection
308 Constitution Drive
Menlo Park, CA 94025-1164
Phone: 800-227-4856
Fax: 800-227-4866

PolySwitch® PTC Devices

Overcurrent Protection Device

PRODUCT: TR600-150

DOCUMENT: SCD 22231
PCN: 050889
REV LETTER: L
REV DATE: MAY 15, 2003

Specification Status: Released

Max Electrical Rating at 20°C

Operating Voltage: 60V_{DC}
Fault Voltage: 600V_{RMS}
Interrupt Current: 3A_{RMS}

Lead Material:
22 AWG Sn/Pb plated copper

Marking:

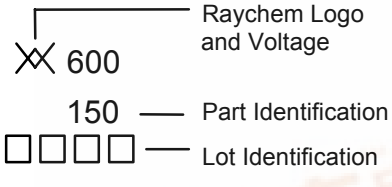

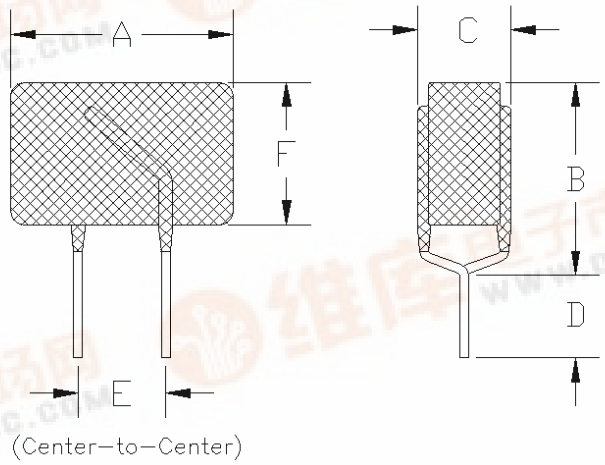

TABLE I. DIMENSIONS:

	A		B		C		D		E	F
	MIN	MAX	MIN	MAX	MIN	MAX	MIN	MAX	NOM	MAX
mm:	--	13.5	--	12.6	--	6.0	4.7	--	5.0	10.0
in:	--	(0.531)	--	(0.496)	--	(0.236)	(0.185)	--	(0.197)	(0.394)

TABLE II. PERFORMANCE RATINGS @ 20°C (unless otherwise noted):

IHOLD (A)		RESISTANCE (Ω)			TIME TO TRIP (s) @ 1A		OPERATING TEMPERATURE (°C)	
20°C	60°C	R MIN	R MAX	$R_{1\ MAX}$*	TYP	MAX	MIN	MAX
0.150	0.096	6.0	12.0	22.0	5.0	8.0	-40	85

*Maximum device resistance at 20°C measured 1hour post trip.

Agency Recognition:	UL, CSA
Reference Documents:	PS300
Precedence:	This specification takes precedence over documents referenced herein.
Effectivity:	Reference documents shall be the issue in effect on the date of invitation for bid.
CAUTION:	Operation beyond the rated voltage or current may result in rupture, electrical arcing or flame.

找PDF 维库一下 pdf.dzsc.com