查询SP6659EK1供应商 捷多邦，专业PCB打样工厂，24小时加急出货

Sipex **Preliminary** **SP6659**

1.5MHz, 600mA Synchronous Buck Regulator

FEATURES

- 94% Efficiency Possible
- 600mA Output Current at V_{IN} = 3V
- 2.5V to 5.5V Input Voltage Range
- 1.5MHz constant frequency operation
- No Schottky Diode Required
- Output Voltages as low as 0.6V
- Slope Compensated Current Mode Operation for Excellent Line and Load Transient Response
- 100 % Duty Cycle in LDO Mode
- <1µA Shutdown Current, Quiescent Current of 300 µA
- Over-temperature protected
- Offered in Low Profile TSOT-23 package

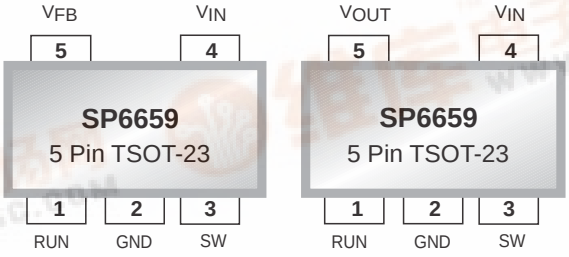

Adjustable **Fixed**

Now Available in Lead Free Packaging

APPLICATIONS

- Cell Phones
- Wireless and DSL Modems
- DSC's
- Portable Instruments

DESCRIPTION

The SP6659 is a 600mA synchronous buck regulator using a constant frequency, current mode architecture. The output voltage can be programmed using an external resistor divider. The 2.5V to 5.5V input voltage range is ideal for portable applications that use a Li-Ion battery. Switching frequency is internally set at 1.5MHz, allowing the use of small surface mount inductors and capacitors. The internal synchronous switch increases efficiency and eliminates the need for an external Schottky diode. The output voltage can be programmed using an external resistor divider. Low output voltages are easily supported with the 0.6V feedback reference voltage. The SP6659 is available in a low profile 5 pin TSOT-23 package.

TYPICAL APPLICATION SCHEMATICS

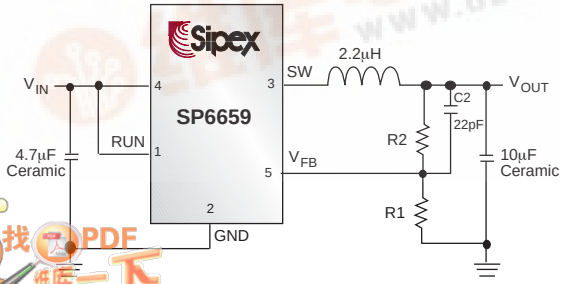

Adjustable

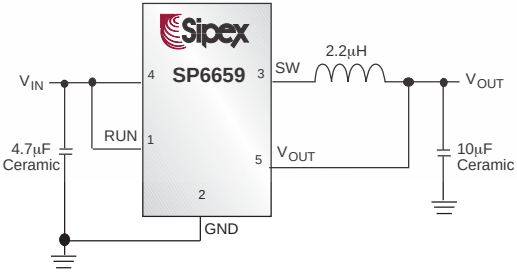

Fixed

找PDF 维库一下 pdf.dzsc.com

ABSOLUTE MAXIMUM RATINGS

Input Supply Voltage ..... -0.3V to +6V
RUN, V_{FB} Voltages ..... -0.3V to (V_{IN} + 0.3V)
SW Voltage ..... -0.3V to (V_{IN} + 0.3V)
P-Channel Switch Source Current 800mA
N-Channel Switch Sink Current 800mA
Peak Switch Sink and Source Current 1.3A
Operating Temperature ..... -40°C to +85°C
Storage Temperature ..... -65°C to +150 °C
Junction Temperature (Note 1) ..... 125 °C

These are stress ratings only and functional operation of the device at these ratings or any other above those indicated in the operation sections of the specifications below is not implied. Exposure to absolute maximum rating conditions for extended periods of time may affect reliability.

ELECTRICAL CHARACTERISTICS

Vin=Vrun=3.6V, Io=0mA, Tamb= -40ºC to +85ºC, typical values at 25ºC unless otherwise noted.

Parameter	Min	Typ	Max	Units	Conditions
Input Voltage Range	2.5		5.5	V	
Input DC Supply Current					
Active Mode		300	400	µA	Vfb = 0.5V, Vin = Vrun
Shutdown Mode		0.1	1	µA	Vin = 3.6V, Vrun = ZeroV
Vfb (Feedback Voltage)	0.5880	0.6000	0.6120	V	Ta=+25ºC
	0.5865	0.6000	0.6135		0ºC<Ta<+85ºC
	0.5820	0.6000	0.6180		-40ºC < Ta < +85ºC
Vfb Input Bias Current		85	300	nA	Vfb = 1.0V
Vfb Line Regulation	-1	0.4	1	%/V	Vin = 2.5V to 5.5V
Vfb Load Regulation	-0.1	0.01	0.1	%/mA	ILoad = 0mA to 600mA
Regulated Output Voltage	1.455	1.500	1.545	V	SP6659EK1-1.5, -40ºC < Ta < +85ºC
	1.746	1.800	1.854	V	SP6659EK1-1.8, -40ºC < Ta < +85ºC
Minimum Output Voltage	0.6			V	
Peak inductor current	0.7	1.15	1.5	A	Vfb = 0.5V
Oscillator frequency	0.8	1.4	1.8	mHz	Closed Loop, ILoad=100mA
P-channel ON resistance		0.4	0.6	Ω	I_{SW} = 100mA
N-channel ON resistance		0.4	0.6	Ω	I_{SW} = -100mA
SW Leakage Current		±0.01	±1.0	µA	Vrun=ZeroV, Vin = 3.6V Vsw=ZeroV, Vsw = Vin
Run Threshold Voltage	0.2	1	1.3	V	
Run Leakage Current		±0.01	±1.5	µA	

Note 1: Junction Temperature T_J is calculated from the ambient temperature TA and ower dissipation P_D according to the following formula: $T_J = T_A + P_D$ X 220°C/W

PIN DESCRIPTION

PIN #	PIN NAME	DESCRIPTION
1	RUN	Power down control pin. Forcing this pin above 1.5V enables the device. Forcing this pin below 0.3V shuts down the device.
2	GND	Ground pin.
3	SW	Switching node.
4	V_{IN}	Power supply pin
5	V_{FB}/ V_{OUT}	Adjustable Version: V_{FB}, Feedback Input Pin. Connect FB to the center point of the external resistor divider. The feedback threshold voltage is 0.6V. Fixed Output Version: V_{OUT}, Output Voltage Feedback Pin. An internal resistive divider drops the output voltage down for comparison to the internal reference voltage.

TYPICAL PERFORMANCE CHARACTERISTICS

Refer to the typical application schematic, T_{AMB}= +27°C

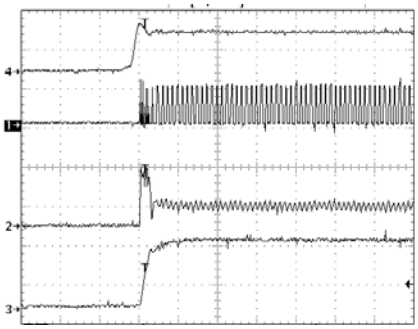

Figure 1: Fast V_{IN} Startup (Scope: 50µs/div)

CH 1: Switch Node, 5V/ div

CH 2: Inductor Current, 1A/ div

CH 3: $V_{OUT,}$ 1V/ div

CH 4: $V_{IN,}$ 5V/ div

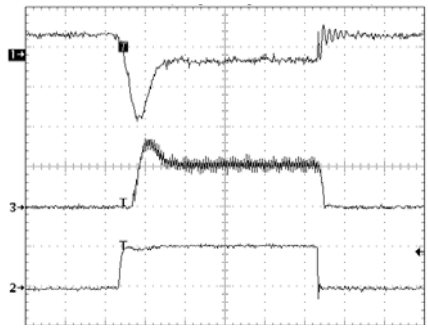

Figure 2: Load Transient 0mA to 600mA

CH 1: Output Voltage, 100mV per division AC-Coupled

CH 2: Load Current, 500mA/ div

CH 3: Inductor Current, 500mA/ div

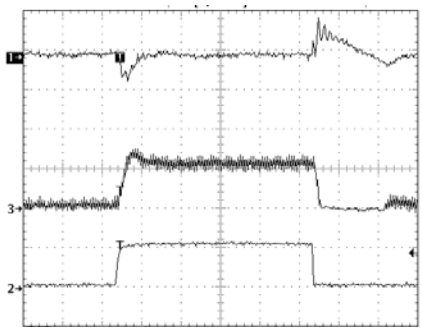

Figure 3: Load Transient 50mA to 650mA

CH 1: Output Voltage, 100mV per division AC-Coupled

CH 2: Load Current, 500mA/ div

CH 3: Inductor Current, 500mA/ div

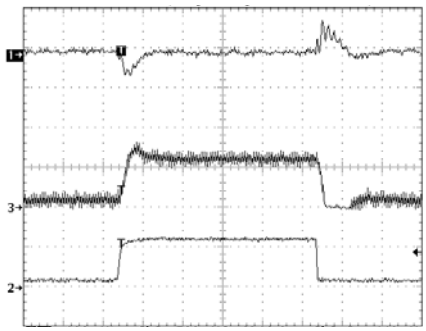

Figure 4: Load Transient 100mA to 700mA

CH 1: Output Voltage, 100mV per division AC-Coupled

CH 2: Load Current, 500mA/ div

CH 3: Inductor Current, 500mA/ div

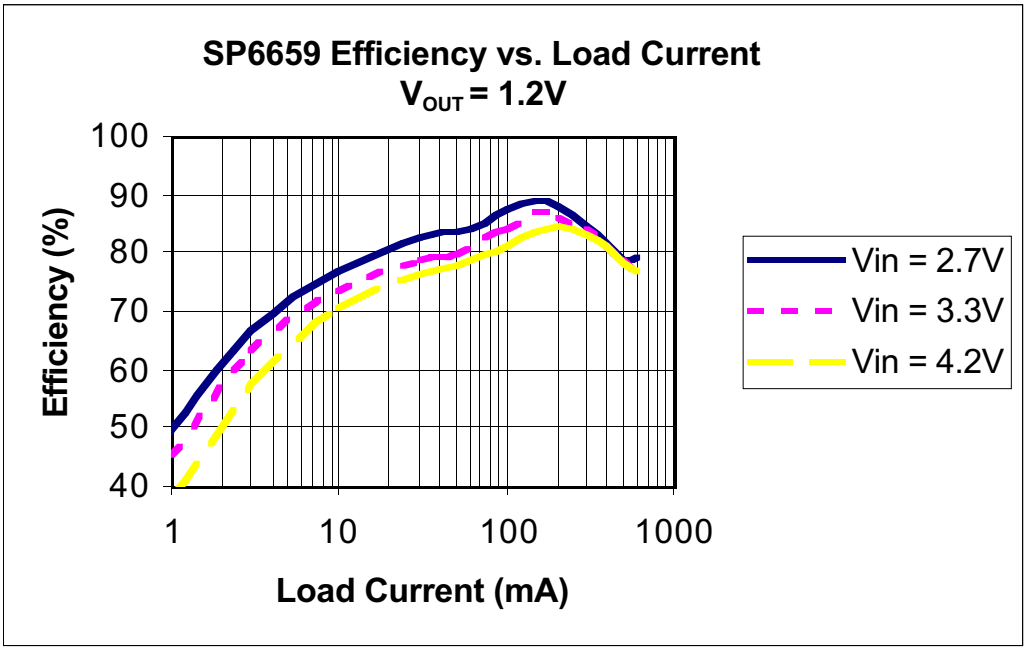

Figure 5: Efficiency Vs. Load Current, Vout =1.2V

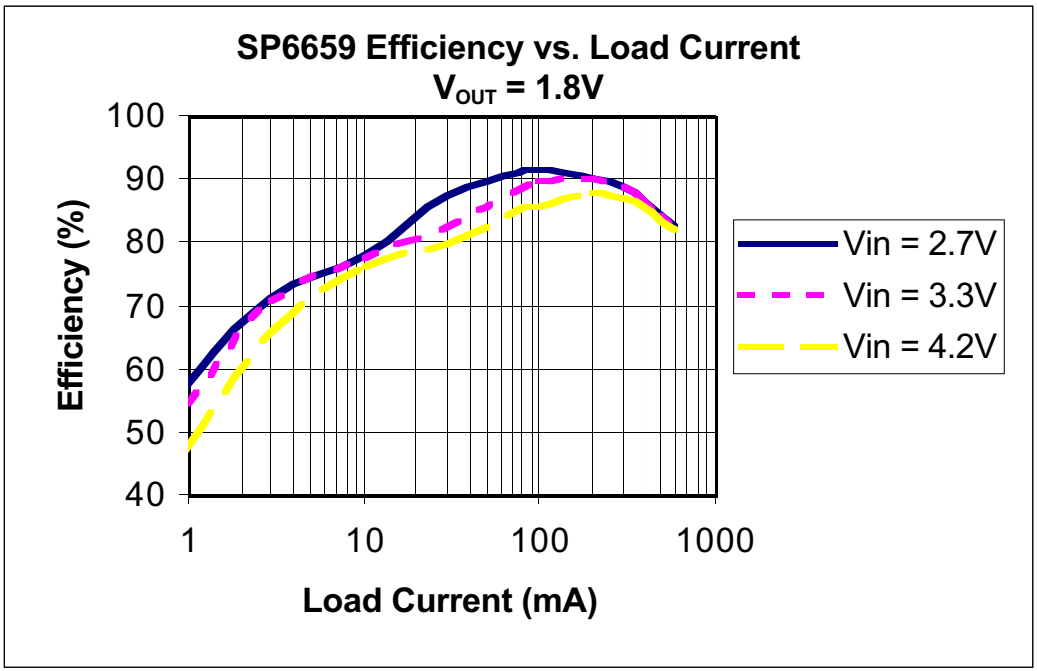

Figure 6: Efficiency Vs. Load Current, Vout =1.8V

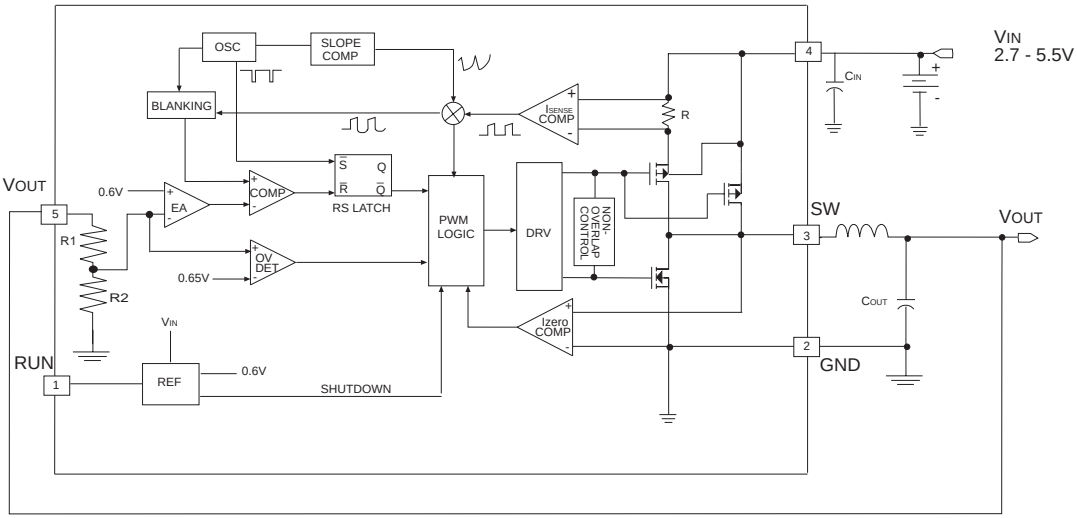

Fixed Output Version

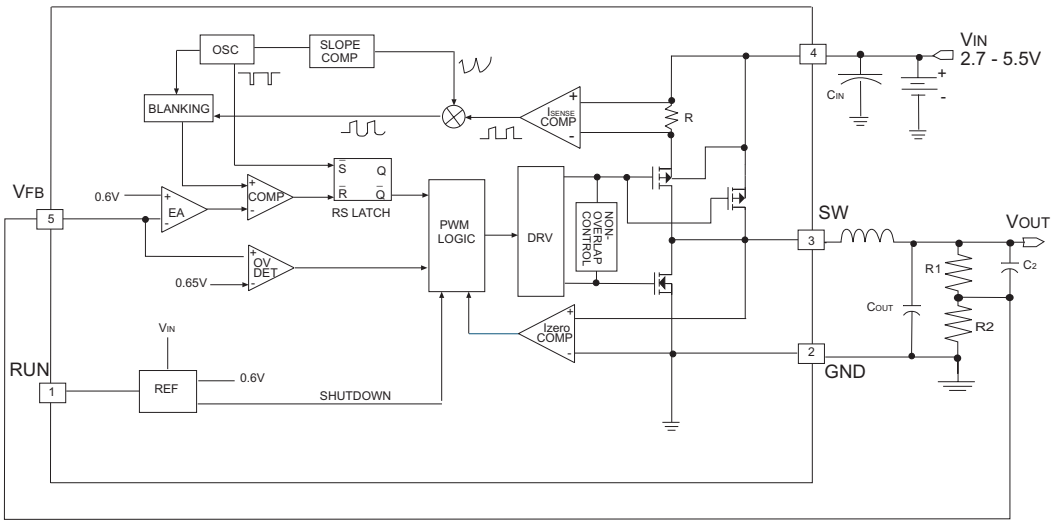

Adjustable Output Version

APPLICATION INFORMATION

A resistive divider based on the following equation determines the output voltage:

$$V_{OUT} = 0.6\ (1+\frac{R2}{R1})$$

The external resistive divider is connected to the output as shown in Figure 7 .

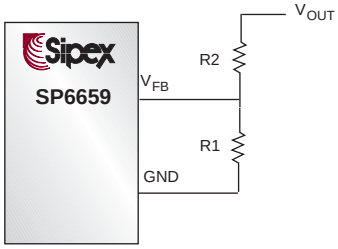

Figure 7: Setting the SP6659 Output Voltage.

THEORY OF OPERATION

The SP6659 is a monolithic switching mode Step-Down DC-DC converter. It utilizes internal MOSFETs to achieve high efficiency and can generate very low output voltage by using its internal reference at 0.6V. It operates at a fixed switching frequency, and uses slope compensated, current-mode architecture. This Step-Down DC-DC converter supplies 600mA of output current at V_{IN} = 3V. The entire input voltage range is from 2.5V to 5.5V.

CURRENT MODE PWM CONTROL

Slope compensated current mode PWM control provides stable switching and cycle-by-cycle current limit for excellent load and line responses and protection of the internal main switch (P-Channel MOSFET) as well as the synchronous rectifier (N-Channel MOSFET). During normal operation, the internal P-Channel MOSFET is turned on for a certain time to ramp the inductor current at each rising edge of the internal oscillator, and switched off when the peak inductor current is above the error voltage. The current comparator, I_{COMP}, limits the peak inductor current. When the main switch is off, the synchronous rectifier will be turned on immediately and stay on until either the inductor current starts to reverse, as indicated by the current reversal comparator, I_{ZERO}, or the beginning of the next clock cycle. The OVDET comparator controls output transient overshoots by turning the main switch off and keeping it off until the fault is no longer present.

IDLE MODE OPERATION

At very light loads, the SP6659 automatically enters Idle Mode (Figure 8). In the Idle Mode, the inductor current may reach zero Amps or reverse on each pulse. The PWM control loop will automatically skip pulses to maintain output regulation. The bottom MOSFET is turned off by the current reversal comparator, I_{ZERO}, and the switch voltage will ring. This is discontinuous mode operation, and is normal behavior for the switching regulator.

DROPOUT OPERATION

When the input voltage decreases toward the value of the output voltage, the SP6659 allows the main switch to remain on for more than one switching cycle and increases the duty cycle until it reaches 100%.

The duty cycle D of a step-down converter is defined as:

$$D = T_{ON} \times f_{OSC} \times 100\%$$

$$\approx \frac{V_{OUT}}{V_{IN}} \times 100\%$$

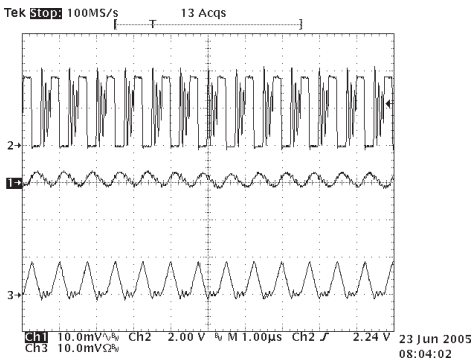

Figure 8. SP6659 Idle Mode Operation

where T_{ON} is the main switch on time, and f_{osc} is the oscillator frequency (1.5Mhz).

The output voltage then is the input voltage minus the voltage drop across the main switch and the inductor. At low input supply voltage, the R_{DSON} of the P-Channel MOSFET increases, and the efficiency of the converter decreases. Caution must be exercised to ensure that the heat dissipated does not exceed the maximum junction temperature of the IC.

MAXIMUM LOAD CURRENT

The SP6659 will operate with an input supply voltage as low as 2.5V, however, the maximum load current decreases at lower inputs due to a large IR drop on the main switch and synchronous rectifier. The slope compensation signal reduces the peak inductor current as a function of the duty cycle to prevent sub-harmonic oscillations at duty cycles greater than 50%. Conversely, the current limit increases as the duty cycle decreases.

INDUCTOR SELECTION

For most designs, the SP6659 operates with inductors of 1µH to 4.7µH. Low inductance values are physically smaller but require faster switching, which can result in some efficiency loss. The inductor value can be derived from the following equation:

$$L = \frac{V_{OUT} \times (V_{IN} - V_{OUT})}{V_{IN} \times \Delta I_L \times f_{OSC}}$$

Where ΔI_L is the inductor Ripple Current. Large value inductors lower ripple current and small value inductors result in higher ripple current. Choose inductors at ripple current of approximately 35% of the maximum load current 600mA, or ~ 210mA.

For output voltages above 2.0V, when light-load efficiency is important, the minimum recommended inductor is 2.2µH. For optimum voltage-positioning load transients, choose an inductor with DC series resistance in the 50mΩ to 150mΩ range. For higher efficiency at heavy loads (above

200mA), or minimal load regulation (but some transient overshoot), the resistance should be kept below 100mΩ. The DC current rating of the inductor should be at least equal to the maximum load current plus half the ripple current to prevent core saturation (600mA+105mA).

Table 1 lists some typical surface mount inductors that meet target applications for the SP6659.

Part #	L (µH)	Max DCR (mΩ)	Rated DC Current (Amps)	Size WxLxH (mm)
Sumida CR43	1.4	56.2	2.52	4.5x4.0x3.5
	2.2	71.2	1.5	
	3.3	86.2	1.44	
	4.7	108.7	1.15	
Sumida CDRH4D18	1.5			4.7x4.7x2.0
	2.2	75	1.32	
	3.3	110	1.04	
	4.7	162	0.84	
Toko D312C	1.5	120	1.29	3.6x3.6x1.2
	2.2	140	1.14	
	3.3	180	0.98	
	4.7	240	0.79	

Table 1: Typical Surface Mount Inductors

INPUT CAPACITOR SELECTION

The input capacitor reduces the surge current drawn from the input and switching noise from the device. The input capacitor impedance at the switching frequency shall be less than input source impedance to prevent high frequency switching current from passing to the input. A low ESR (Equivalent Series Resistance) input capacitor sized for maximum RMS current must be used. Ceramic capacitors with X5R or X7R dielectrics are highly recommended because of their low ESR and small temperature coefficients. A 4.7µF ceramic capacitor for most applications is sufficient.

OUTPUT CAPACITOR SELECTION

The output capacitor is required to keep the output voltage ripple small and to ensure regulation loop stability. The output capacitor must have low impedance at the switching frequency. Ceramic capacitors with X5R or X7R dielectrics are recommended due to their low ESR and high ripple current. The output ripple ΔV_{OUT} is determined by:

$$\Delta V_{OUT} \leq \frac{V_{OUT} \times (V_{IN} - V_{OUT})}{V_{IN} \times L \times f_{OSC}} \times \left\{ ESR + \frac{1}{(8 \times f_{OSC} \times C_{OUT})} \right\}$$

PACKAGE: 5 PIN TSOT23

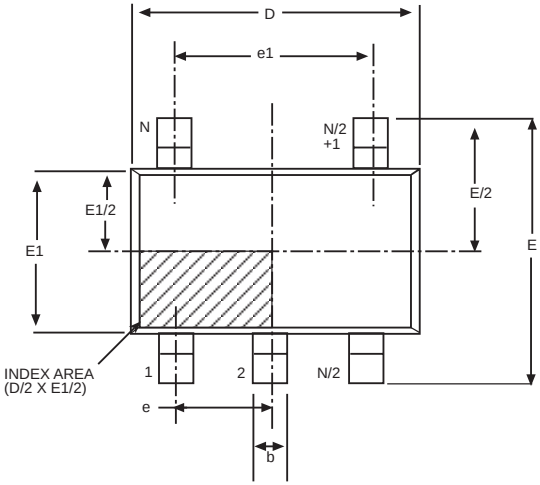

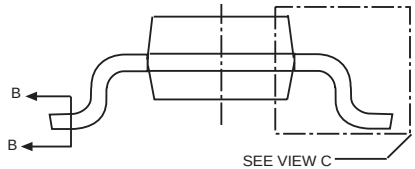

VIEW A-A

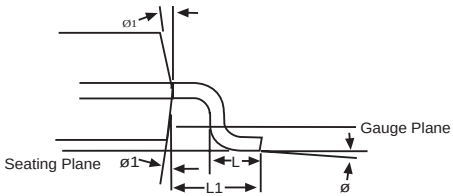

VIEW C

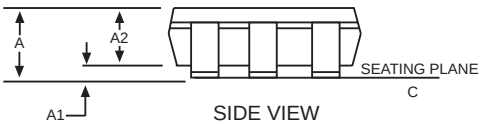

SIDE VIEW

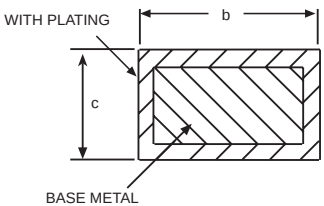

Section B-B

5 Pin TSOT JEDEC MO-193 (AB) Variation			
SYMBOL	MIN	NOM	MAX
A	-	-	1.1
A1	0	-	0.1
A2	0.7	0.9	1
b	0.3	-	0.5
c	0.08	-	0.2
D	2.90 BSC		
e	0.95 BSC		
e1	1.90 BSC		
E	2.80 BSC		
E1	1.60 BSC		
L	0.3	0.45	0.6
L1	0.60 REF		
L2	0.25 BSC		
ø	0º	4º	8º
ø1	4º	10º	12º

Note: Dimensions in (mm)

THERMAL RESISTANCE

Thermal Resistance is specified with approximately 1 square of 1 ounce of copper.

Θ_{JA} .....220°C/W
Θ_{JC} .....110°C/W

ORDERING INFORMATION

Part Number	Operating Temperature Range	Package Type
SP6659EK1	-40°C to +85°C	5 Pin TSOT23
SP6659EK1/TR	-40°C to +85°C	5 Pin TSOT23
SP6659EK1-1.5	-40°C to +85°C	5 Pin TSOT23
SP6659EK1-1.5/TR	-40°C to +85°C	5 Pin TSOT23
SP6659EK1-1.8	-40°C to +85°C	5 Pin TSOT23
SP6659EK1-1.8/TR	-40°C to +85°C	5 Pin TSOT23

Available in lead free packaging. To order add "-L" suffix to part number.

Example: SP6659EK1/TR = standard; SP6659EK1-L/TR = lead free

/TR = Tape and Reel

Pack quantity is 2,500 for TSOT23.

ANALOG EXCELLENCE

Sipex Corporation

Headquarters and
Sales Office
233 South Hillview Drive
Milpitas, CA 95035
TEL: (408) 934-7500
FAX: (408) 935-7600

Sipex Corporation reserves the right to make changes to any products described herein. Sipex does not assume any liability arising out of the application or use of any product or circuit described herein; neither does it convey any license under its patent rights nor the rights of others.