查询U1898供应商 捷多邦，专业PCB打样工厂，24小时加急出货

FAIRCHILD SEMICONDUCTOR®

U1898

N-Channel Switch

- This device is designed for low level analog switching, sample and hold circuits and chopper stabalized amplifiers.
- Sourced from Process 51.
- See J111 for characteristics.

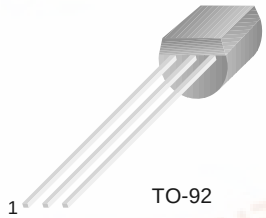

1. Drain 2. Source 3. Gate

Absolute Maximum Ratings* T_a=25°C unless otherwise noted

Symbol	Parameter	Ratings	Units
V_{DG}	Drain-Gate Voltage	40	V
V_{GS}	Gate-Source Voltage	-40	V
I_{GF}	Forward Gate Current	50	mA
T_J, T_{STG}	Operating and Storage Junction Temperature Range	-55 ~ 150	°C

* This ratings are limiting values above which the serviceability of any semiconductor device may be impaired.

NOTES:
1) These rating are based on a maximum junction temperature of 150 degrees C.
2) These are steady limits. The factory should be consulted on applications involving pulsed or low duty cycle operations.

Electrical Characteristics T_a=25°C unless otherwise noted

Symbol	Parameter	Test Condition	Min.	Max.	Units
Off Characteristics					
$V_{(BR)GS}$	Gate-Source Breakdown Voltage	I_G = 1.0 µA, V_{DS} = 0	-40		V
$V_{GS(off)}$	Gate-Source Cutoff Voltage	V_{DS} = 20 V, I_D = 1.0 nA	-2.0	-7.0	V
I_{DGO}	Drain-Gate Leakage Current	V_{DG} = 20 V, I_S = 0		-200	pA
On Characteristics					
I_{DSS}	Zero-Gate Voltage Drain Current *	V_{DS} = 20 V, V_{GS} = 0	15		mA
$r_{DS(on)}$		I_D = 1.0 mA, V_{GS} = 0		50	Ω
Small Signal Characteristics					
$r_{ds(on)}$	Drain-Source On Resistance	V_{DS} = VGS = 0, f= 1.0 kHz		50	Ω
C_{iss}	Input Capacitance	V_{DS} = 20, V_{GS} = 0, f = 1.0 MHz		16	pF
C_{rss}	Reverse Transfer Capacitance	V_{GS} = - 20 V, f = 1.0 MHz		5.0	pF
Switching Characteristics					
t_{on}	Turn-On Time	$I_{D(on)}$ = 6.0 mA		35	ns
t_{off}	Turn-Off Time	$V_{GS(off)}$ = 6.0 V		60	ns

* Pulse Test: Pulse Width ≤ 300 µs, Duty Cycle ≤ 2.0%

Thermal Characteristics T_a=25°C unless otherwise noted

Symbol	Parameter	Max.	Units
P_D	Total Device Dissipation Derate above 25°C	625 5.0	mW mW/°C
$R_{\theta JC}$	Thermal Resistance, Junction to Case	125	°C/W
$R_{\theta JA}$	Thermal Resistance, Junction to Ambient	357	°C/W

找PDF 维库一下 pdf.dzsc.com

©2004 Fairchild Semiconductor Corporation

Package Dimensions

TO-92

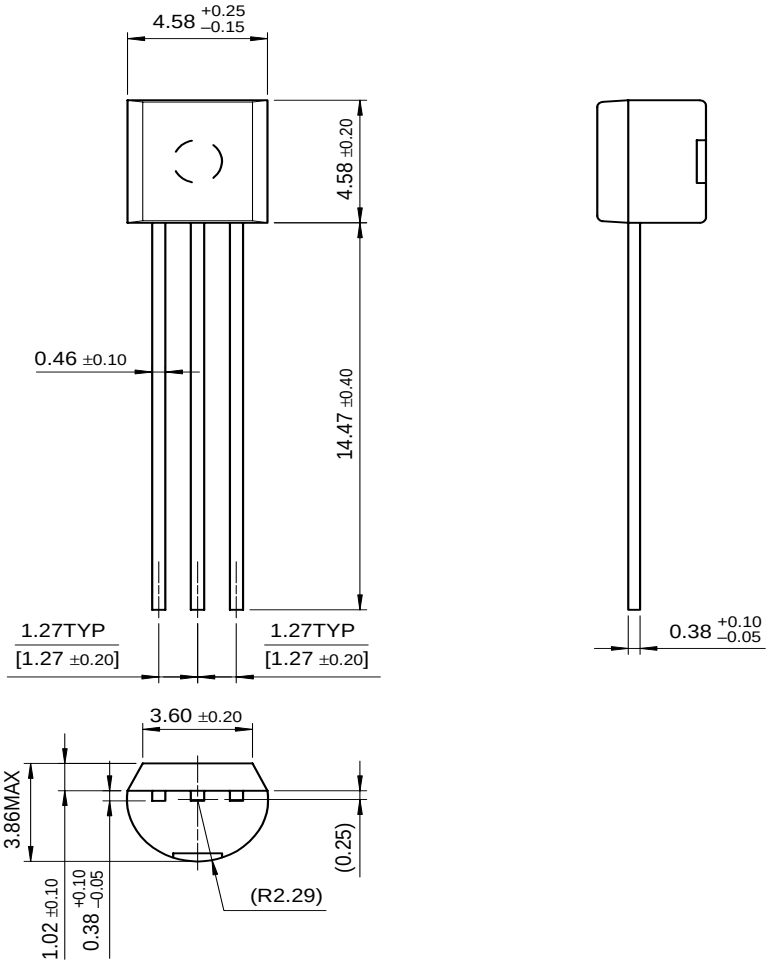

Dimensions in Millimeters

©2004 Fairchild Semiconductor Corporation

TRADEMARKS

The following are registered and unregistered trademarks Fairchild Semiconductor owns or is authorized to use and is not intended to be an exhaustive list of all such trademarks.

ACEx™	FACT Quiet Series™	ImpliedDisconnect™	PACMAN™	SPM™
ActiveArray™	FAST®	ISOPLANAR™	POP™	Stealth™
Bottomless™	FASTr™	LittleFET™	Power247™	SuperFET™
CoolFET™	FPS™	MICROCOUPLER™	PowerSaver™	SuperSOT™-3
CROSSVOLT™	FRFET™	MicroFET™	PowerTrench®	SuperSOT™-6
DOME™	GlobalOptoisolator™	MicroPak™	QFET®	SuperSOT™-8
EcoSPARK™	GTO™	MICROWIRE™	QS™	SyncFET™
E^2CMOS™	HiSeC™	MSX™	QT Optoelectronics™	TinyLogic®
EnSigna™	I^2C™	MSXPro™	Quiet Series™	TINYOPTO™
FACT™	*i-Lo*™	OCX™	RapidConfigure™	TruTranslation™
Across the board. Around the world.™		OCXPro™	RapidConnect™	UHC™
The Power Franchise®		OPTOLOGIC®	SILENT SWITCHER®	UltraFET®
Programmable Active Droop™		OPTOPLANAR™	SMART START™	VCX™

DISCLAIMER

FAIRCHILD SEMICONDUCTOR RESERVES THE RIGHT TO MAKE CHANGES WITHOUT FURTHER NOTICE TO ANY PRODUCTS HEREIN TO IMPROVE RELIABILITY, FUNCTION OR DESIGN. FAIRCHILD DOES NOT ASSUME ANY LIABILITY ARISING OUT OF THE APPLICATION OR USE OF ANY PRODUCT OR CIRCUIT DESCRIBED HEREIN; NEITHER DOES IT CONVEY ANY LICENSE UNDER ITS PATENT RIGHTS, NOR THE RIGHTS OF OTHERS.

LIFE SUPPORT POLICY

FAIRCHILD'S PRODUCTS ARE NOT AUTHORIZED FOR USE AS CRITICAL COMPONENTS IN LIFE SUPPORT DEVICES OR SYSTEMS WITHOUT THE EXPRESS WRITTEN APPROVAL OF FAIRCHILD SEMICONDUCTOR CORPORATION.

As used herein:

1. Life support devices or systems are devices or systems which, (a) are intended for surgical implant into the body, or (b) support or sustain life, or (c) whose failure to perform when properly used in accordance with instructions for use provided in the labeling, can be reasonably expected to result in significant injury to the user.

2. A critical component is any component of a life support device or system whose failure to perform can be reasonably expected to cause the failure of the life support device or system, or to affect its safety or effectiveness.

PRODUCT STATUS DEFINITIONS

Definition of Terms

Datasheet Identification	Product Status	Definition
Advance Information	Formative or In Design	This datasheet contains the design specifications for product development. Specifications may change in any manner without notice.
Preliminary	First Production	This datasheet contains preliminary data, and supplementary data will be published at a later date. Fairchild Semiconductor reserves the right to make changes at any time without notice in order to improve design.
No Identification Needed	Full Production	This datasheet contains final specifications. Fairchild Semiconductor reserves the right to make changes at any time without notice in order to improve design.
Obsolete	Not In Production	This datasheet contains specifications on a product that has been discontinued by Fairchild semiconductor. The datasheet is printed for reference information only.

©2004 Fairchild Semiconductor Corporation