ROHM

STRUCTURE Silicon Monolithic Integrated Circuit

PRODUCT SERIES Low Voltage Detector IC

TYPE **BU48XXFVE Series**

FEATURES
- Detection voltage lineup :0.9V～4.8V
- High precision detection voltage :±1%

○ABSOLUTE MAXIMUM RATINGS (Ta=25℃)

Parameter		Symbol	Limit	Unit
Supply Voltage ※1		VDD−GND	-0.3 to +7	V
Output Voltage ※1	Nch Open Drain Output	VOUT	GND-0.3 to +7	V
Power Dissipation ※2		Pd	210	mW
Operating Temperature ※1		Topr	-40 to +125	℃
Storage Temperature Range		Tstg	-55 to +125	℃
Junction Temperature		Tjmax	125	℃

※1 Do not exceed Pd.

※2 Mounted on 70mm×70mm×1.6mm Glass Epoxy PCB, Pd derated at 2.1mW/℃ for tempearture above Ta=25℃

NOTE : The product described in this specification is a strategic product (and/or service) subject to COCOM regulations. It should not be exported without authorization from the appropriate government.

NOTE : This product is not designed for protection against radioactive rays.

Status of this document
The Japanese version of this document is the formal specification.
A customer may use this translation version only for a reference to help reading the formal version.
If there are any differences in translation version of this document, formal version takes priority.

○ELECTRICAL CHARACTERISTICS (Unless Otherwise Specified Ta=-25 to 125°C)

Parameter	Symbol	Condition		Limit Min.	Limit Typ.	Limit Max.	Unit
Detection Voltage	V_{DET}	V_{DD}=H→L Ta=25°C R_L=470kΩ		V_{DET}(T) ×0.99	V_{DET}(T)	V_{DET}(T) ×1.01	V
Circuit Current when ON	I_{DD1}	V_{DD}=V_{DET}−0.2V,	V_{DET}=0.9-1.3V	-	0.15	0.88	μA
			V_{DET}=1.4-2.1V	-	0.20	1.05	
			V_{DET}=2.2-2.7V	-	0.25	1.23	
			V_{DET}=2.8-3.3V	-	0.30	1.40	
			V_{DET}=3.4-4.2V	-	0.35	1.58	
			V_{DET}=4.3-4.8V	-	0.40	1.75	
Circuit Current when OFF	I_{DD2}	V_{DD}=V_{DET}+2.0V,	V_{DET}=0.9-1.3V	-	0.30	1.40	μA
			V_{DET}=1.4-2.1V	-	0.35	1.58	
			V_{DET}=2.2-2.7V	-	0.40	1.75	
			V_{DET}=2.8-3.3V	-	0.45	1.93	
			V_{DET}=3.4-4.2V	-	0.50	2.10	
			V_{DET}=4.3-4.8V	-	0.55	2.28	
Operating Voltage Range	V_{OPL}	V_{OL}≦0.4V, R_L=470kΩ Ta=25°C～125°C		0.70	-	-	V
		V_{OL}≦0.4V, R_L=470kΩ Ta=-25°C～25°C		0.90	-	-	
'Low' Output Current (Nch)	I_{OL}	V_{DS}=0.05V, V_{DD}=0.85V		20	100	-	μA
		V_{DS}=0.5V, V_{DD}=1.5V, V_{DET}=1.7-4.8V		1.0	3.3	-	mA
		V_{DS}=0.5V, V_{DD}=2.4V, V_{DET}=2.7-4.8V		3.6	6.5	-	
Output Leak Current when OFF	Ileak	V_{DD}=V_{DS}=7V Ta=-40°C～85°C		-	0	0.1	μA
		V_{DD}=V_{DS}=7V Ta=85°C～125°C		-	0	1	
Detection Voltage Temperature Coefficient	V_{DET}/ΔT	Ta=-40°C～125°C (Designed Guarantee)		-	±30	-	ppm/°C
Hysteresis Voltage	ΔVDET	R_L=470kΩ, V_{DD}=L→H→L Ta=-40°C～125°C	V_{DET}≦1.0V	V_{DET}× 0.03	V_{DET}× 0.05	V_{DET}× 0.08	V
			V_{DET}≧1.1V	V_{DET}× 0.03	V_{DET}× 0.05	V_{DET}× 0.07	

V_{DET}(T) : Standard Detection Voltage (0.9V to 4.8V、0.1V step)
R_L : Pull-up resistor to be connected between V_{OUT} and power supply.
Designed Guarantee.(Outgoing inspection is not done on all products.)

○PHYSICAL DIMENSIONS, MARKING

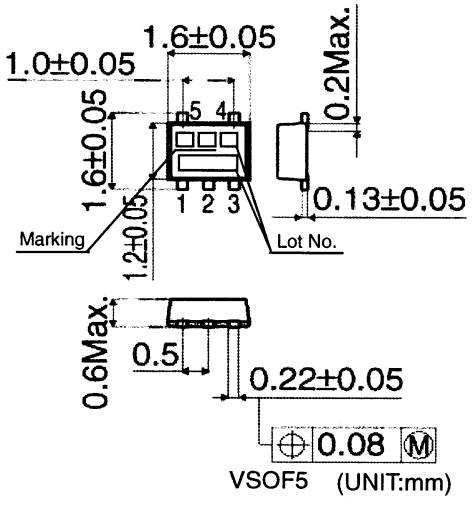

VSOF5 (UNIT:mm)

OBLOCK DIAGRAM

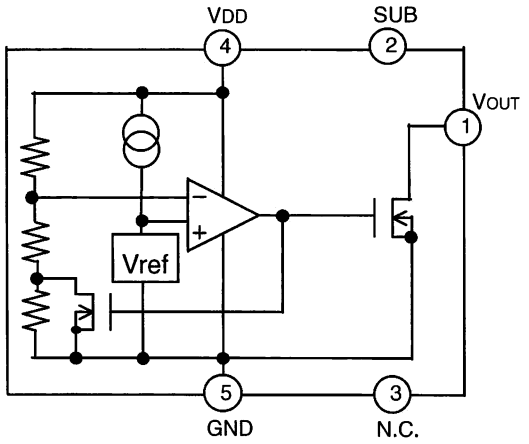

NOTE : Substrate Pin should be connected with VDD

※ Please refer to technical note concerning application circuit, and etc.

OPIN NO. , PIN NAME

Pin Number	Pin Name
1	VOUT
2	SUB
3	N.C.
4	VDD
5	GND

OSTANDARD DETECTION VOLTAGE AND MARKING

Type	Standard Detection Voltage [V]	Marking	Type	Standard Detection Voltage [V]	Marking
BU4848	4.800	JR	BU4828	2.800	HV
BU4847	4.700	JQ	BU4827	2.700	HU
BU4846	4.600	JP	BU4826	2.600	HT
BU4845	4.500	JN	BU4825	2.500	HS
BU4844	4.400	JM	BU4824	2.400	HR
BU4843	4.300	JL	BU4823	2.300	HQ
BU4842	4.200	JK	BU4822	2.200	HP
BU4841	4.100	JJ	BU4821	2.100	HN
BU4840	4.000	JH	BU4820	2.000	HM
BU4839	3.900	JG	BU4819	1.900	HL
BU4838	3.800	JF	BU4818	1.800	HK
BU4837	3.700	JE	BU4817	1.700	HJ
BU4836	3.600	JD	BU4816	1.600	HH
BU4835	3.500	JC	BU4815	1.500	HG
BU4834	3.400	JB	BU4814	1.400	HF
BU4833	3.300	JA	BU4813	1.300	HE
BU4832	3.200	HZ	BU4812	1.200	HD
BU4831	3.100	HY	BU4811	1.100	HC
BU4830	3.000	HX	BU4810	1.000	HB
BU4829	2.900	HW	BU4809	0.900	HA

ONOTES FOR USE

1 . Absolute maximum range
Absolute Maximum Ratings are those values beyond which the life of a device may be destroyed. We cannot be defined the failure mode, such as short mode or open mode. Therefore a physical security countermeasure, like fuse, is to be given when a specific mode to be beyond absolute maximum ratings is considered.

2 . GND potential
GND terminal should be a lowest voltage potential every state.
Please make sure all pins which are over ground even if include transient feature.

3 . Electrical Characteristics
Be sure to check the electrical characteristics, that is one the tentative specification will be changed by temperature, supply voltage, and external circuit.

4 . Bypass Capacitor for Noise Rejection
Please put into the to reject noise between V_{DD} pin and GND. If extremely big capacitor is used, transient response might be late. Please confirm sufficiently for the point.

5 . Short Circuit between Terminal and Soldering
Don't short-circuit between Output pin and V_{DD} pin, Output pin and GND pin, or V_{DD} pin and GND pin. When soldering the IC on circuit board, please be unusually cautious about the orientation and the position of the IC. When the orientation is mistaken the IC may be destroyed.

6 . Electromagnetic Field
Mal-function may happen when the device is used in the strong electromagnetic field.

7 . The V_{DD} line inpedance might cause oscillation because of the detection current.

8 . A V_{DD} -GND capacitor (as close connection as possible) should be used in high V_{DD} line impedance condition.

9 . Lower than the mininum input voltage makes the V_{OUT} high impedance, and it must be V_{DD} in pull up (V_{DD}) condition.

10. Recommended value of RL Resistar is over 10kΩ. (VDET≧1.5V)
over 100kΩ.(VDET≦1.4V)

11. BU48XXFVE has extremely high impedance terminals. Small leak current due to the uncleanness of PCB surface might cause unexpected operations. Application values in these conditions should be selected carefully. If the leakage is assumed between the VOUT terminal and the GND terminal, the pull up resistor should be less than 1/10 of the assumed leak resistance.

12. External parameters
The recommended parameter range for R_L is 10kΩ～1MΩ.When attempting to operate beyond these parameters, be sure to verify the actual operation before continuing use.

13. Power on reset operation
Please note that the power on reset output varies with the Vcc rise up time.
Please verify the actual operation.

Notes

- No technical content pages of this document may be reproduced in any form or transmitted by any means without prior permission of ROHM CO.,LTD.
- The contents described herein are subject to change without notice. The specifications for the product described in this document are for reference only. Upon actual use, therefore, please request that specifications to be separately delivered.
- Application circuit diagrams and circuit constants contained herein are shown as examples of standard use and operation. Please pay careful attention to the peripheral conditions when designing circuits and deciding upon circuit constants in the set.
- Any data, including, but not limited to application circuit diagrams information, described herein are intended only as illustrations of such devices and not as the specifications for such devices. ROHM CO.,LTD. disclaims any warranty that any use of such devices shall be free from infringement of any third party's intellectual property rights or other proprietary rights, and further, assumes no liability of whatsoever nature in the event of any such infringement, or arising from or connected with or related to the use of such devices.
- Upon the sale of any such devices, other than for buyer's right to use such devices itself, resell or otherwise dispose of the same, no express or implied right or license to practice or commercially exploit any intellectual property rights or other proprietary rights owned or controlled by
- ROHM CO., LTD. is granted to any such buyer.
- Products listed in this document are no antiradiation design.

The products listed in this document are designed to be used with ordinary electronic equipment or devices (such as audio visual equipment, office-automation equipment, communications devices, electrical appliances and electronic toys).
Should you intend to use these products with equipment or devices which require an extremely high level of reliability and the malfunction of with would directly endanger human life (such as medical instruments, transportation equipment, aerospace machinery, nuclear-reactor controllers, fuel controllers and other safety devices), please be sure to consult with our sales representative in advance.

About Export Control Order in Japan

Products described herein are the objects of controlled goods in Annex 1 (Item 16) of Export Trade Control Order in Japan.
In case of export from Japan, please confirm if it applies to "objective" criteria or an "informed" (by MITI clause) on the basis of "catch all controls for Non-Proliferation of Weapons of Mass Destruction.

Thank you for your accessing to ROHM product informations.

More detail product informations and catalogs are available,

please contact your nearest sales office.

Please contact our sales offices for details ;

U.S.A / San Diego	TEL : +1(858)625-3630	FAX : +1(858)625-3670
Atlanta	TEL : +1(770)754-5972	FAX : +1(770)754-0691
Dallas	TEL : +1(972)312-8818	FAX : +1(972)312-0330
Germany / Dusseldorf	TEL : +49(2154)9210	FAX : +49(2154)921400
United Kingdom / London	TEL : +44(1)908-282-666	FAX : +44(1)908-282-528
France / Paris	TEL : +33(0)1 56 97 30 60	FAX : +33(0) 1 56 97 30 80
China / Hong Kong	TEL : +852(2)740-6262	FAX : +852(2)375-8971
Shanghai	TEL : +86(21)6279-2727	FAX : +86(21)6247-2066
Dilian	TEL : +86(411)8230-8549	FAX : +86(411)8230-8537
Beijing	TEL : +86(10)8525-2483	FAX : +86(10)8525-2489
Taiwan / Taipei	TEL : +866(2)2500-6956	FAX : +866(2)2503-2869
Korea / Seoul	TEL : +82(2)8182-700	FAX : +82(2)8182-715
Singapore	TEL : +65-6332-2322	FAX : +65-6332-5662
Malaysia / Kuala Lumpur	TEL : +60(3)7958-8355	FAX : +60(3)7958-8377
Philippines / Manila	TEL : +63(2)807-6872	FAX : +63(2)809-1422
Thailand / Bangkok	TEL : +66(2)254-4890	FAX : +66(2)256-6334

Japan /
(Internal Sales)

Tokyo	2-1-1, Yaesu, Chuo-ku, Tokyo 104-0082	
	TEL : +81(3)5203-0321	FAX : +81(3)5203-0300
Yokohama	2-4-8, Shin Yokohama, Kohoku-ku, Yokohama, Kanagawa 222-8575	
	TEL : +81(45)476-2131	FAX : +81(45)476-2128
Nagoya	Dainagayo Building 9F 3-28-12, Meieki, Nakamura-ku, Nagoya,Aichi 450-0002	
	TEL : +81(52)581-8521	FAX : +81(52)561-2173
Kyoto	579-32 Higashi Shiokouji-cho, Karasuma Nishi-iru, Shiokoujidori, Shimogyo-ku, Kyoto 600-8216	
	TEL : +81(75)311-2121	FAX : +81(75)314-6559

(Contact address for overseas customers in Japan)

Yokohama	TEL : +81(45)476-9270	FAX : +81(045)476-9271

As of 18th. April 2005