查询BU97565CH-3BW供应商

STRUCTURE Silicon monolithic integrated circuit

PRODUCT NAME **BU97565CH-3BW**

FUNCTION RAM built-in, Dot-matrix STN LCD control driver

FEATURE
- 4-SPI interface
- Built-in LCD driver power-supply circuit, voltage follower, booster circuit, (Built-in capacitor)
- Built-in bias select circuit (1/6, 1/7, 1/8, 1/9)

○ Absolute maximum ratings (VSS = VSS2 = VSS3 = 0V)

Parameter	Symbol	Rated values	Unit	Remarks
Power supply voltage 1	VDD	-0.5 ～ +4.5	V	Logic power-supply
Power supply voltage 2	VCI1,2	-0.5 ～ +4.5	V	Booster power-supply
Power supply voltage 3	VLCDIN	-0.5 ～ +13.5	V	Power supply for LCD drive
Input voltage range	VIN	-0.5 ～ VDD+0.5	V	
Operational temperature range	Topr	-40 ～ +85	℃	
Storage temperature range	Tstg	-55 ～ +155	℃	

* VLCDIN＞VCI1,2≧VDD

○ Recommend operating conditions (Ta = 25℃, VSS = VSS2 = VSS3 = 0V)

Parameter	Symbol	MIN	TYP	MAX	Unit	Remarks
Power supply voltage 1	VDD	2.5	-	3.6	V	Logic power-supply
Power supply voltage 2	VCI1, 2	2.5	-	3.6	V	Booster power-supply
Power supply voltage 3	VLCDIN	6.0	-	12.0	V	Power supply for LCD drive

※ About shape / delivery forms of this product, please refer to "Specification of Chip Shipment"
※ About explanation about panel module design that used this product, please refer to "Panel Layout Design Guide"
※ About detailed function explanation of this product, please refer to "Function Description Guide"
※ About explanation about picture quality adjustment of this product, please refer to "Adjustment manual for the picture quality of LCD Display"

○ Block diagram

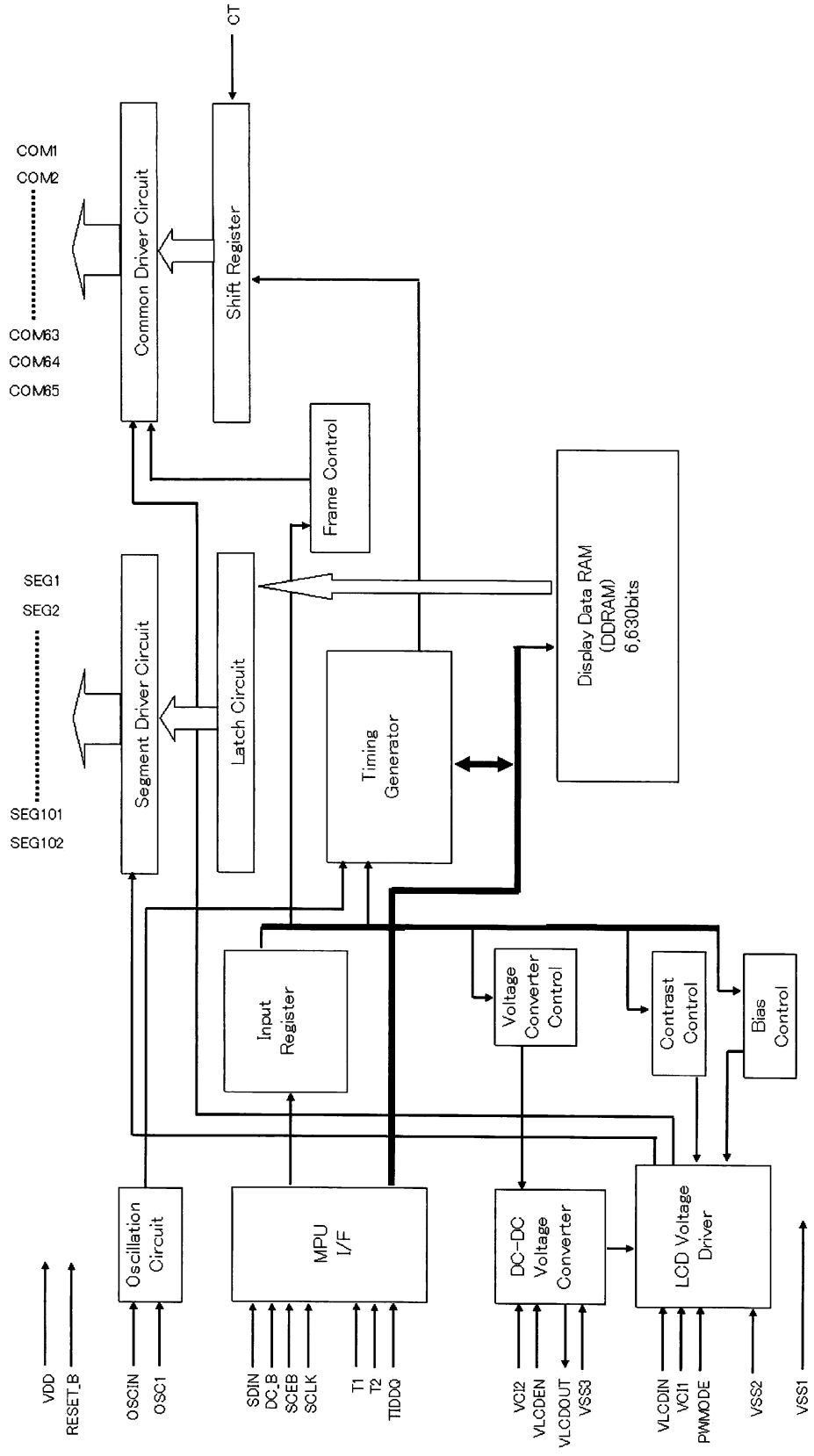

○ Electrical characteristics

DC Characteristics

(VDD=2.5～3.6V,VCI=2.5～3.6V,VSS=0V unless otherwise specified)

Parameter	Symbol	Limit			Unit	Condition
		MIN	TYP	MAX		
"H" input voltage	VIH	0.7VDD	-	-	V	
"L" input voltage	VIL	-	-	0.3VDD	V	
Input current	IIN	-1	-	1	uA	
On resistance of IC	RON	-	2.0	8.0	kΩ	|ΔVon|=0.5V
LCD Operation Voltage	VLCD	-200	-	200	mV	VCI1,2=3.0V,VLCD=8.4V, Ta=25℃
Current consumption	IDD1	-	0.1	5	uA	Standby mode
	IDD2	-	120	-	uA	Normal mode (x4 boost)
	IDD3	-	220	-	uA	Access mode (x4 boost)

Oscillation Characteristics

Parameter	Symbol	Limit			Unit	Condition
		MIN	TYP	MAX		
Internal oscillation frequency	fosc	26.5	30.5	34.3	kHz	VDD=3.0V,Ta=25℃
External clock frequency	fIN	-	30	-	kHz	
External clock duty	tW	-	50	-	%	
Frame frequency *	fFR	-	78	-	Hz	fosc=30.5kHz VDD=3.0V,Ta=25℃

*: Relations between oscillation frequency (clock frequency) and the frame frequency are shown with the next method.

f FR=fosc/390

RESET Characteristics

Parameter	Symbol	Limit			Unit	Condition
		MIN	TYP	MAX		
RESET command time	tRC	500	-	-	ns	
RESET enable pulse width	tRWe	500	-	-	ns	
RESET disable pulse width	tRWn	100	-	-	ns	

MPU interface Characteristics (4-SPI)
(VDD=2.5～3.6V,VCI=2.5～3.6V,VSS=0V unless otherwise specified)

Parameter	Symbol	Limit			Unit	Conditions
		MIN	TYP	MAX		
Input rise time	tr	-	-	100	ns	
Input fall time	tf	-	-	100	ns	
SCLK cycle	tCYCS	250	-	-	ns	
"H" SCLK pulse width	tWH	100	-	-	ns	
"L" SCLK pulse width	tWL	100	-	-	ns	
DC_B set-up time	tDCS	100	-	-	ns	
DC_B hold time	tDCH	100	-	-	ns	
SDIN set-up time	tSDINS	100	-	-	ns	
SDIN hold time	tSDINH	100	-	-	ns	
SCEB setup time	tSCES	60	-	-	ns	
SCEB hold time	tSCEH	100	-	-	ns	

○ Cautions on use

(1) Absolute Maximum Ratings
An excess in the absolute maximum ratings, such as supply voltage, temperature range of operatingconditions, etc., can break down devices, thus making impossible to identify breaking mode such as a short circuit or an open circuit. If any special mode exceeding the absolute maximum ratings is assumed, consideration should be given to take physical safety measures including the use of fuses, etc.

(2) Operating conditions
These conditions represent a range within which characteristics can be provided approximately as expected. The electrical characteristics are guaranteed under the conditions of each parameter.

(3) Reverse connection of power supply connector
The reverse connection of power supply connector can break down ICs. Take protective measures against the breakdown due to the reverse connection, such as mounting an external diode between the power supply and the IC's power supply terminal.

(4) Power supply line
Design PCB pattern to provide low impedance for the wiring between the power supply and the GND lines.In this regard, for the digital block power supply and the analog block power supply, even though these power supplies has the same level of potential, separate the power supply pattern for the digital block from that for the analog block, thus suppressing the diffraction of digital noises to the analog block power supply resulting from impedance common to the wiring patterns. For the GND line, give consideration to design the patterns in a similar manner.
Furthermore, for all power supply terminals to ICs, mount a capacitor between the power supply and the GND terminal. At the same time, in order to use an electrolytic capacitor, thoroughly check to be sure the characteristics of the capacitor to be used present no problem including the occurrence of capacity dropout at a low temperature, thus determining the constant.

(5) GND voltage
Make setting of the potential of the GND terminal so that it will be maintained at the minimum in any operating state. Furthermore, check to be sure no terminals are at a potential lower than the GND voltage including an actual electric transient.

(6) Short circuit between terminals and erroneous mounting
In order to mount ICs on a set PCB, pay thorough attention to the direction and offset of the ICs. Erroneous mounting can break down the ICs. Furthermore, if a short circuit occurs due to foreign matters entering between terminals or between the terminal and the power supply or the GND terminal, the ICs can break down.

(7) Operation in strong electromagnetic field
Be noted that using ICs in the strong electromagnetic field can malfunction them.

(8) Inspection with set PCB
On the inspection with the set PCB, if a capacitor is connected to a low-impedance IC terminal, the IC can suffer stress. Therefore, be sure to discharge from the set PCB by each process. Furthermore, in order to mount or dismount the set PCB to/from the jig for the inspection process, be sure to turn OFF the power supply and then mount the set PCB to the jig. After the completion of the inspection, be sure to turn OFF the power supply and then dismount it from the jig. In addition, for protection against static electricity, establish a ground for the assembly process and pay thorough attention to the transportation and the storage of the set PCB.

(9) Input terminals
In terms of the construction of IC, parasitic elements are inevitably formed in relation to potential. The operation of the parasitic element can cause interference with circuit operation, thus resulting in a malfunction and then breakdown of the input terminal. Therefore, pay thorough attention not to handle the input terminals, such as to apply to the input terminals a voltage lower than the GND respectively, so that any parasitic element will operate. Furthermore, do not apply a voltage to the input terminals when no power supply voltage is applied to the IC. In addition, even if the power supply voltage is applied, apply to the input terminals a voltage lower than the power supply voltage or within the guaranteed value of electrical characteristics.

(10) Ground wiring pattern
If small-signal GND and large-current GND are provided, It will be recommended to separate the large-current GND pattern from the small-signal GND pattern and establish a single ground at the reference point of the set PCB so that resistance to the wiring pattern and voltage fluctuations due to a large current will cause no fluctuations in voltages of the small-signal GND. Pay attention not to cause fluctuations in the GND wiring pattern of external parts as well.

(11) External capacitor
In order to use a ceramic capacitor as the external capacitor, determine the constant with consideration given to a degradation in the nominal capacitance due to DC bias and changes in the capacitance due to temperature, etc.

(12) No Connecting input terminals
In terms of extremely high impedance of CMOS gate, to open the input terminals causes unstable state. And unstable state brings the inside gate voltage of p-channel or n-channel transistor into active. As a result, battery current may increase. And unstable state can also causes unexpected operation of IC. So unless otherwise specified, input terminals not being used should be connected to the power supply or GND line.

Notes

- No technical content pages of this document may be reproduced in any form or transmitted by any means without prior permission of ROHM CO.,LTD.
- The contents described herein are subject to change without notice. The specifications for the product described in this document are for reference only. Upon actual use, therefore, please request that specifications to be separately delivered.
- Application circuit diagrams and circuit constants contained herein are shown as examples of standard use and operation. Please pay careful attention to the peripheral conditions when designing circuits and deciding upon circuit constants in the set.
- Any data, including, but not limited to application circuit diagrams information, described herein are intended only as illustrations of such devices and not as the specifications for such devices. ROHM CO.,LTD. disclaims any warranty that any use of such devices shall be free from infringement of any third party's intellectual property rights or other proprietary rights, and further, assumes no liability of whatsoever nature in the event of any such infringement, or arising from or connected with or related to the use of such devices.
- Upon the sale of any such devices, other than for buyer's right to use such devices itself, resell or otherwise dispose of the same, no express or implied right or license to practice or commercially exploit any intellectual property rights or other proprietary rights owned or controlled by
- ROHM CO., LTD. is granted to any such buyer.
- Products listed in this document are no antiradiation design.

The products listed in this document are designed to be used with ordinary electronic equipment or devices (such as audio visual equipment, office-automation equipment, communications devices, electrical appliances and electronic toys).
Should you intend to use these products with equipment or devices which require an extremely high level of reliability and the malfunction of with would directly endanger human life (such as medical instruments, transportation equipment, aerospace machinery, nuclear-reactor controllers, fuel controllers and other safety devices), please be sure to consult with our sales representative in advance.

About Export Control Order in Japan

Products described herein are the objects of controlled goods in Annex 1 (Item 16) of Export Trade Control Order in Japan.
In case of export from Japan, please confirm if it applies to "objective" criteria or an "informed" (by MITI clause) on the basis of "catch all controls for Non-Proliferation of Weapons of Mass Destruction.

Thank you for your accessing to ROHM product informations.

More detail product informations and catalogs are available,

please contact your nearest sales office.

Please contact our sales offices for details ;

U.S.A / San Diego	TEL : +1(858)625-3630	FAX : +1(858)625-3670
Atlanta	TEL : +1(770)754-5972	FAX : +1(770)754-0691
Dallas	TEL : +1(972)312-8818	FAX : +1(972)312-0330
Germany / Dusseldorf	TEL : +49(2154)9210	FAX : +49(2154)921400
United Kingdom / London	TEL : +44(1)908-282-666	FAX : +44(1)908-282-528
France / Paris	TEL : +33(0)1 56 97 30 60	FAX : +33(0) 1 56 97 30 80
China / Hong Kong	TEL : +852(2)740-6262	FAX : +852(2)375-8971
Shanghai	TEL : +86(21)6279-2727	FAX : +86(21)6247-2066
Dilian	TEL : +86(411)8230-8549	FAX : +86(411)8230-8537
Beijing	TEL : +86(10)8525-2483	FAX : +86(10)8525-2489
Taiwan / Taipei	TEL : +866(2)2500-6956	FAX : +866(2)2503-2869
Korea / Seoul	TEL : +82(2)8182-700	FAX : +82(2)8182-715
Singapore	TEL : +65-6332-2322	FAX : +65-6332-5662
Malaysia / Kuala Lumpur	TEL : +60(3)7958-8355	FAX : +60(3)7958-8377
Philippines / Manila	TEL : +63(2)807-6872	FAX : +63(2)809-1422
Thailand / Bangkok	TEL : +66(2)254-4890	FAX : +66(2)256-6334

Japan /
(Internal Sales)

Tokyo	2-1-1, Yaesu, Chuo-ku, Tokyo 104-0082	
	TEL : +81(3)5203-0321	FAX : +81(3)5203-0300
Yokohama	2-4-8, Shin Yokohama, Kohoku-ku, Yokohama, Kanagawa 222-8575	
	TEL : +81(45)476-2131	FAX : +81(45)476-2128
Nagoya	Dainagayo Building 9F 3-28-12, Meieki, Nakamura-ku, Nagoya,Aichi 450-0002	
	TEL : +81(52)581-8521	FAX : +81(52)561-2173
Kyoto	579-32 Higashi Shiokouji-cho, Karasuma Nishi-iru, Shiokoujidori, Shimogyo-ku, Kyoto 600-8216	
	TEL : +81(75)311-2121	FAX : +81(75)314-6559

(Contact address for overseas customers in Japan)

Yokohama	TEL : +81(45)476-9270	FAX : +81(045)476-9271

As of 18th. April 2005