查询UA759供应商

捷多邦，专业PCB打样工厂，24小时加急出货

FAIRCHILD

A Schlumberger Company

μA759 • μA77000 Power Operational Amplifiers

Linear Division Operational Amplifiers

Description

The μA759 and μA77000 are high performance monolithic operational amplifiers constructed using the Fairchild Planar Epitaxial process. The μA759 provides 325 mA and the μA77000 provides 250 mA output current and feature small signal characteristics better than the μA741. The amplifiers are designed to operate from a single or dual power supply with the input common mode range including the negative supply. The high gain and high output power provide superior performance whenever an operational amplifier is needed. The μA759 and μA77000 employ internal current limiting, thermal shutdown, and safe-area compensation making them essentially indestructible. These amplifiers are intended for a wide range of applications including voltage regulators, audio amplifiers, servo amplifiers, and power drivers.

- **Output Current**
  - **μA759 — 325 mA Minimum**
  - **μA77000 — 250 mA Minimum**
- **Internal Short Circuit Current Limiting**
- **Internal Thermal Overload Protection**
- **Internal Output Transistors Safe-Area Protection**
- **Input Common Mode Voltage Range Includes Ground Or Negative Supply**

Absolute Maximum Ratings

Storage Temperature Range	
Metal Can	−65°C to +175°C
Power Watt	−65°C to +150°C
Operating Junction Temperature Range	
Extended (μA759M)	−55 to +150°C
Commercial (μA759C, μA77000C)	0°C to +125°C
Lead Temperature	
Metal Can (soldering, 60 s)	300°C
Power Watt (soldering, 10 s)	265°C
Internal Power Dissipation[1]	Internally Limited
Supply Voltage	±18 V
Differential Input Voltage	30 V
Input Voltage[2]	±15 V

Notes

1. Although the internal power dissipation is limited, the junction temperature must be kept below the maximum specified temperature in order to meet data sheet specifications. To calculate the maximum junction temperature or heat sink required, use the thermal resistance values which follow the Electrical Characteristics Table.
2. For a supply voltage less than 30 V between V+ and V−, the absolute maximum input voltage is equal to the supply voltage.

Connection Diagram 8-Lead Metal Package (Top View)

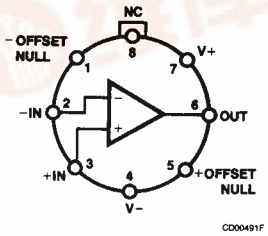

Lead 4 connected to case.

Order Information

Device Code	Package Code	Package Description
μA759HM	5W	Metal
μA759HC	5W	Metal

Connection Diagram TO-202 Package (Top View)

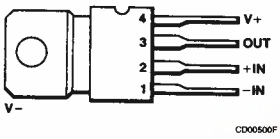

Order Information

Device Code	Package Code	Package Description
μA759U1C	8Z	Power Watt
μA77000U1C	8Z	Power Watt

找PDF 维库一下 pdf.dzsc.com

Equivalent Circuit

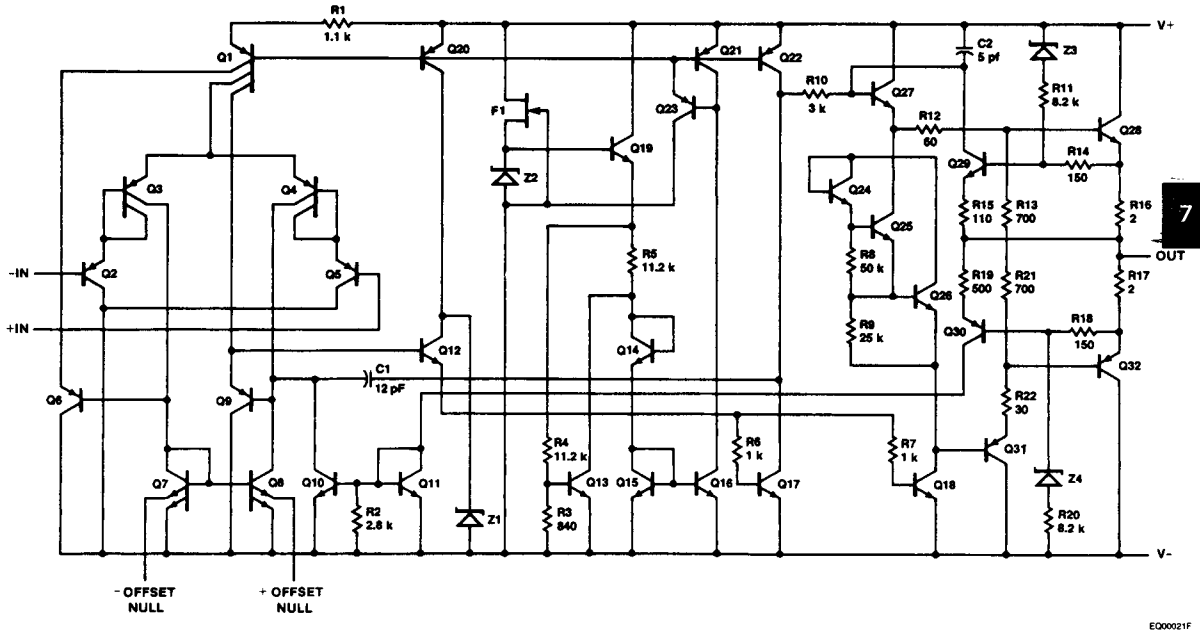

Note
All resistor values in ohms.

μA759

Electrical Characteristics $T_J = 25°C$, $V_{CC} = \pm 15$ V, unless otherwise specified.

Symbol	Characteristic		Condition	Min	Typ	Max	Unit
V_{IO}	Input Offset Voltage		$R_S \leqslant 10$ kΩ		1.0	3.0	mV
I_{IO}	Input Offset Current				5.0	30	nA
I_{IB}	Input Bias Current				50	150	nA
Z_I	Input Impedance			0.25	1.5		MΩ
I_{CC}	Supply Current				12	18	mA
V_{IR}	Input Voltage Range			+13 to V−	+13 to V−		V
I_{OS}	Output Short Circuit Current		$\lvert V_{CC} - V_O \rvert = 30$ V		±200		mA
$I_{O\ PEAK}$	Peak Output Current		$3.0\ V \leqslant \lvert V_{CC} - V_O \rvert \leqslant 10$ V	±325	±500		mA
A_{VS}	Large Signal Voltage Gain		$R_L \geqslant 50$ Ω, $V_O = \pm 10$ V	50	200		V/mV
TR	Transient Response	Rise time	$R_L = 50$ Ω, $A_V = 1.0$		300		ns
		Overshoot			5.0		%
SR	Slew Rate		$R_L = 50$ Ω, $A_V = 1.0$		0.6		V/μs
BW	Bandwidth		$A_V = 1.0$		1.0		MHz
The following specifications apply for $-55°C \leqslant T_J \leqslant +150°C$							
V_{IO}	Input Offset Voltage		$R_S \leqslant 10$ kΩ			4.5	mV
I_{IO}	Input Offset Current					60	nA
I_{IB}	Input Bias Current					300	nA
CMR	Common Mode Rejection		$R_S \leqslant 10$ kΩ	80	100		dB
PSRR	Power Supply Rejection Ratio		$R_S \leqslant 10$ kΩ	80	100		dB
A_{VS}	Large Signal Voltage Gain		$R_L \geqslant 50$ Ω, $V_O = \pm 10$ V	25	200		V/mV
V_{OP}	Output Voltage Swing		$R_L = 50$ Ω	±10	±12.5		V

μA759C
Electrical Characteristics $T_J = 25°C$, $V_{CC} = \pm 15$ V, unless otherwise specified.

Symbol	Characteristic		Condition	Min	Typ	Max	Unit
V_{IO}	Input Offset Voltage		$R_S \leqslant 10$ kΩ		1.0	6.0	mV
I_{IO}	Input Offset Current				5.0	50	nA
I_{IB}	Input Bias Current				50	250	nA
Z_I	Input Impedance			0.25	1.5		MΩ
I_{CC}	Supply Current				12	18	mA
V_{IR}	Input Voltage Range			+13 to V−	+13 to V−		V
I_{OS}	Output Short Circuit Current		$\lvert V_{CC} - V_O \rvert = 30$ V		±200		mA
$I_{O\ PEAK}$	Peak Output Current		$3.0\ V \leqslant \lvert V_{CC} - V_O \rvert \leqslant 10$ V	±325	±500		mA
A_{VS}	Large Signal Voltage Gain		$R_L \geqslant 50$ Ω, $V_O = \pm 10$ V	25	200		V/mV
TR	Transient Response	Rise time	$R_L = 50$ Ω, $A_V = 1.0$		300		ns
		Overshoot			10		%
SR	Slew Rate		$R_L = 50$ Ω, $A_V = 1.0$		0.5		V/μs
BW	Bandwidth		$A_V = 1.0$		1.0		MHz
The following specifications apply for $0° \leqslant T_J \leqslant +125°C$							
V_{IO}	Input Offset Voltage		$R_S \leqslant 10$ kΩ			7.5	mV
I_{IO}	Input Offset Current					100	nA
I_{IB}	Input Bias Current					400	nA
CMR	Common Mode Rejection		$R_S \leqslant 10$ kΩ	70	100		dB
PSRR	Power Supply Rejection Ratio		$R_S \leqslant 10$ kΩ	80	100		dB
A_{VS}	Large Signal Voltage Gain		$R_L \geqslant 50$ Ω, $V_O = \pm 10$ V	25	200		V/mV
V_{OP}	Output Voltage Swing		$R_L = 50$ Ω	±10	±12.5		V

μA77000

Electrical Characteristics $T_J = 25°C$, $V_{CC} = \pm 15$ V, unless otherwise specified.

Symbol	Characteristic		Condition	Min	Typ	Max	Unit
V_{IO}	Input Offset Voltage		$R_S \leqslant 10$ kΩ		1.0	8.0	mV
I_{IO}	Input Offset Current				5.0	50	nA
I_{IB}	Input Bias Current				50	250	nA
Z_I	Input Impedance			0.25	1.5		MΩ
I_{CC}	Supply Current				12	18	mA
V_{IR}	Input Voltage Range			+13 to V−	+13 to V−		V
I_{OS}	Output Short Circuit Current		$\lvert V_{CC} - V_O \rvert = 30$ V		±200		mA
$I_{O\ PEAK}$	Peak Output Current		$3.0\ V \leqslant \lvert V_{CC} - V_O \rvert \leqslant 10$ V	±250	±400		mA
A_{VS}	Large Signal Voltage Gain		$R_L \geqslant 50$ Ω, $V_O = \pm 10$ V	25	200		V/mV
TR	Transient Response	Rise time	$R_L = 50$ Ω, $A_V = 1.0$		300		ns
		Overshoot			10		%
SR	Slew Rate		$R_L = 50$ Ω, $A_V = 1.0$		0.5		V/μs
BW	Bandwidth		$A_V = 1.0$		1.0		MHz
The following specifications apply for $0° \leqslant T_J \leqslant +125°C$							
V_{IO}	Input Offset Voltage		$R_S \leqslant 10$ kΩ			10	mV
I_{IO}	Input Offset Current					100	nA
I_{IB}	Input Bias Current					400	nA
CMR	Common Mode Rejection		$R_S \leqslant 10$ kΩ	70	100		dB
PSRR	Power Supply Rejection Ratio		$R_S \leqslant 10$ kΩ	80	100		dB
A_{VS}	Large Signal Voltage Gain		$R_L \geqslant 50$ Ω, $V_O = \pm 10$ V	25	200		V/mV
V_{OP}	Output Voltage Swing		$R_L = 50$ Ω	±10	±12.5		V

Package	Typ	Max	Typ	Max
	θ_{JC} °C/W	θ_{JC} °C/W	θ_{JA} °C/W	θ_{JA} °C/W
Power Watt (U1)	8.0	12	75	80
Metal Can (H)	30	40	120	150

$$P_{D\,Max} = \frac{T_{J\,Max} - T_A}{\theta_{JC} + \theta_{CA}} \text{ or}$$

$$= \frac{T_{J\,Max} - T_A}{\theta_{JA}} \text{ (Without a heat sink)}$$

$$\theta_{CA} = \theta_{CS} + \theta_{SA}$$

Solving T_J:

$$T_J = T_A + P_D(\theta_{JC} + \theta_{CA}) \text{ or}$$
$$= T_A + P_D\theta_{JA} \text{ (Without a heat sink)}$$

Where:

T_J = Junction Temperature
T_A = Ambient Temperature
P_D = Power Dissipation
θ_{JA} = Junction to ambient thermal resistance
θ_{JC} = Junction to case thermal resistance
θ_{CA} = Case to ambient thermal resistance
θ_{CS} = Case to heat sink thermal resistance
θ_{SA} = Heat sink to ambient thermal resistance

Mounting Hints

Metal Can Package (μA759HC/μA759HM)
The μA759 in the 8-Lead TO-99 metal can package must be used with a heat sink. With ±15 V power supplies, the μA759 can dissipate up to 540 mW in its quiescent (no load) state. This would result in a 100°C rise in chip temperature to 125°C (assuming a 25°C ambient temperature). In order to avoid this problem, it is advisable to use either a slip on or stud mount heat sink with this package. If a stud mount heat sink is used, it may be necessary to use insulating washers between the stud and the chassis because the case of the μA759 is internally connected to the negative power supply terminal.

Power Watt Package (μA759U1C/μA77000U1C)
The μA759U1C and μA77000U1C are designed to be attached by the tab to a heat sink. This heat sink can be either one of the many heat sinks which are commercially available, a piece of metal such as the equipment chassis, or a suitable amount of copper foil as on a double sided PC board. The important thing to remember is that the negative power supply connection to the op amp must be made through the tab. Furthermore, adequate heat sinking must be provided to keep the chip temperature below 125°C under worst case load and ambient temperature conditions.

Typical Performance Curves

Frequency Response For Various Closed Loop Gains

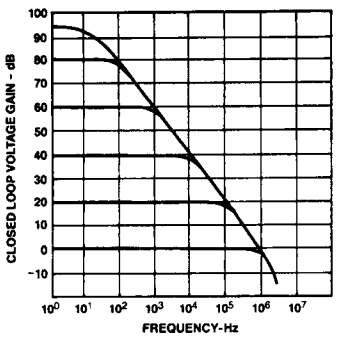

Open Loop vs Frequency Response

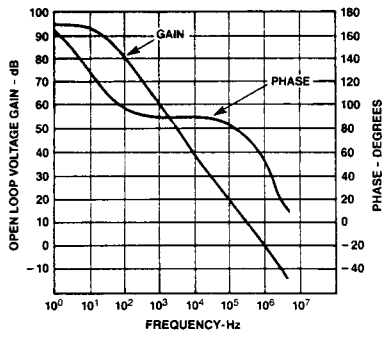

Output Voltage vs Frequency

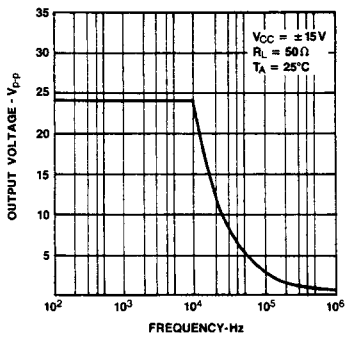

Typical Performance Curves (Cont.)

Output Voltage vs Load Resistance

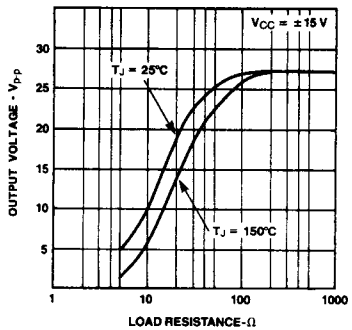

Voltage Follower Large Signal Pulse Response

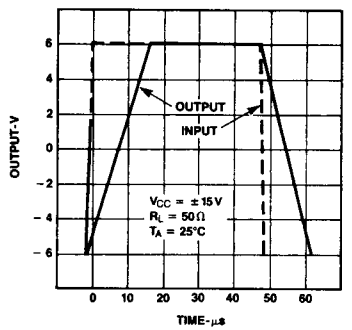

Voltage Follower Transient Response

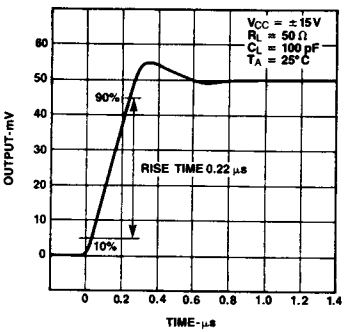

Total Harmonic Distortion vs Frequency

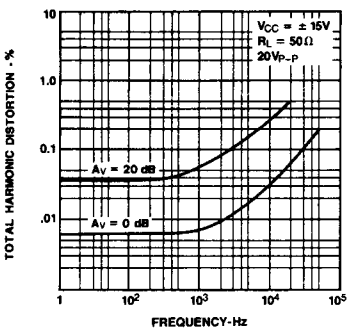

Total Harmonic Distortion vs Power Output

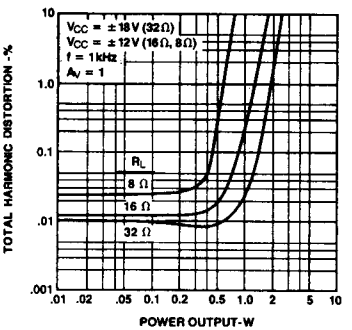

Input Noise Voltage vs Frequency

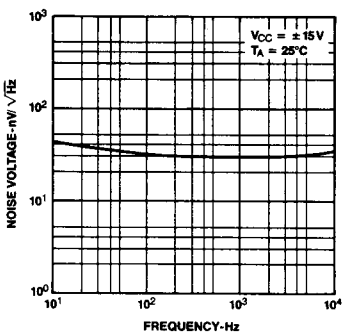

Noise Current vs Frequency

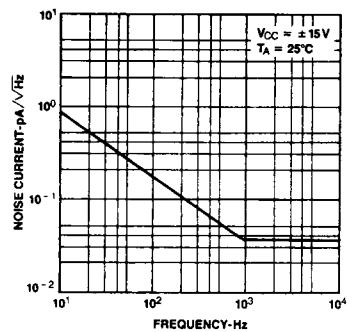

Short Circuit Current vs Junction Temperature

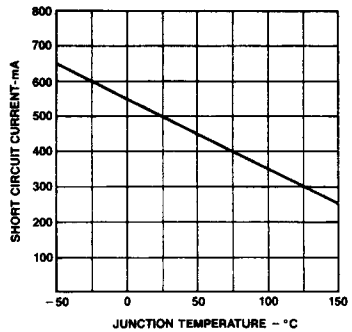

Peak Output Current vs Output Voltage

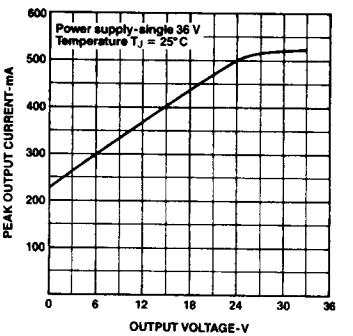

Offset Null Circuit

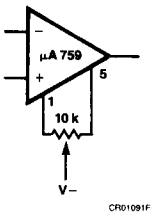

Paralleling μA759 Power Op Amps

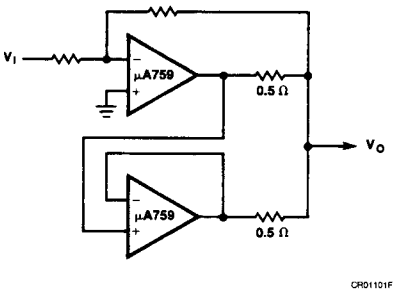

Audio Applications

Low Cost Phono Amplifier

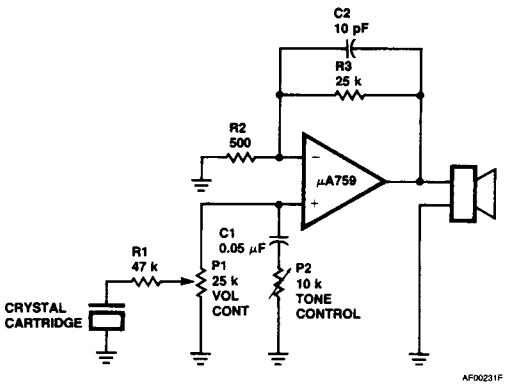

Speaker Impedance (ohms)	Output Power (watts)	Min Supply (volts)	V_{Op-p} (volts)
4	.18	9	2.4
8	.36	12	4.8
16	.72	15	9.6
32	1.44	25	19.2

Headphone Amplifier

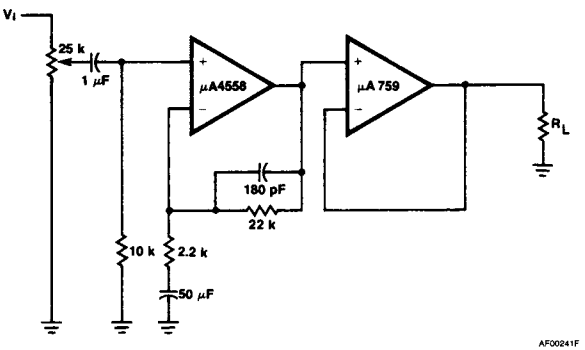

Note

1. All resistor values in ohms.

Bi-Directional Intercom System Using the μA759 Power Op Amp

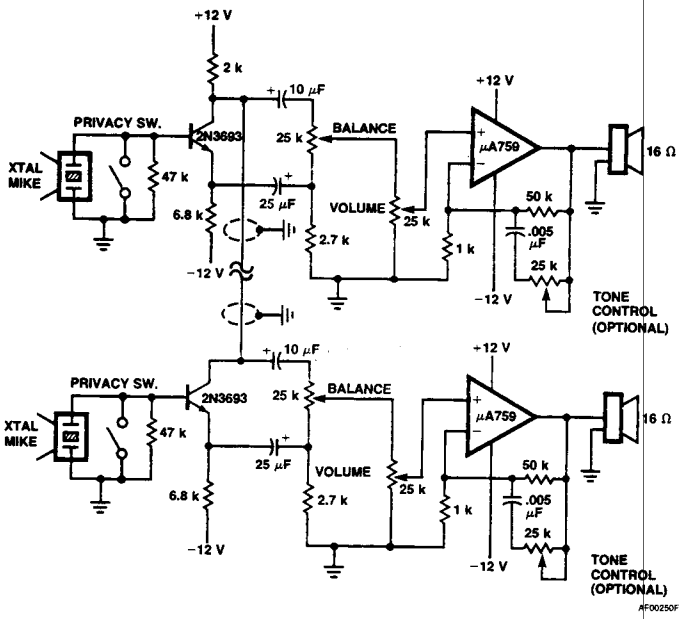

Features
Circuit Simplicity
1 Watt of Audio Output
Duplex operation with only one two-wire cable as interconnect.

Note
1. All resistor values in ohms.

High Slew Rate Power OP Amp/Audio Amp

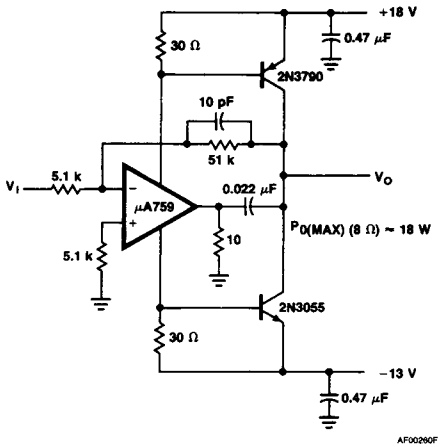

Features
High Slew Rate 9 V/μs
High 3 dB Power Bandwidth 85 kHz
18 Watts Output Power Into an 8 Ω Load.
Low Distortion — .2%, 10 VRMS, 1 kHz Into 8 Ω

Design Consideration
$A_V \geqslant 10$

Servo Applications

DC Servo Amplifiers

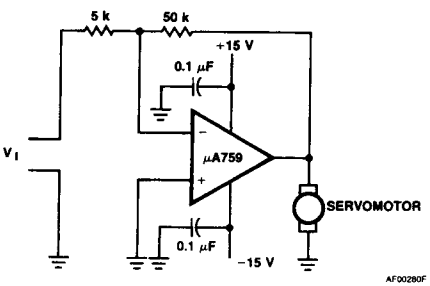

Features
Circuit Simplicity
One Chip Means Excellent Reliability

Design Considerations
$I_O \leqslant 325$ mA

Note
1. All resistor values in ohms.

AG Servo Amplifier – Bridge Type

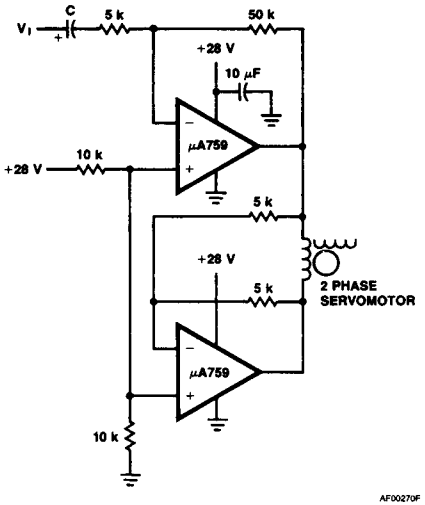

Features
Gain of 10
Use of μA759 Means Simple Inexpensive Circuit

Design Considerations
325 mA Max Output Current

Regulator Applications

Adjustable Dual Tracking Regulator

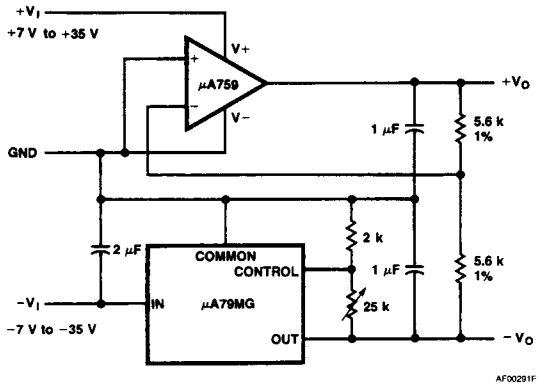

Features
Wide Output Voltage Range (±2.2 to ±30 V)
Excellent Load Regulation $\Delta V_O < \pm 5$ mV for $\Delta I_O = \pm 0.2$ A
Excellent Line Regulation $\Delta V_O < \pm 2$ mV for $\Delta V_I = 10$ V

Note
1. All resistor values in ohms.

Regulator Applications (Cont.)

10 Amp – 12 Volt Regulator

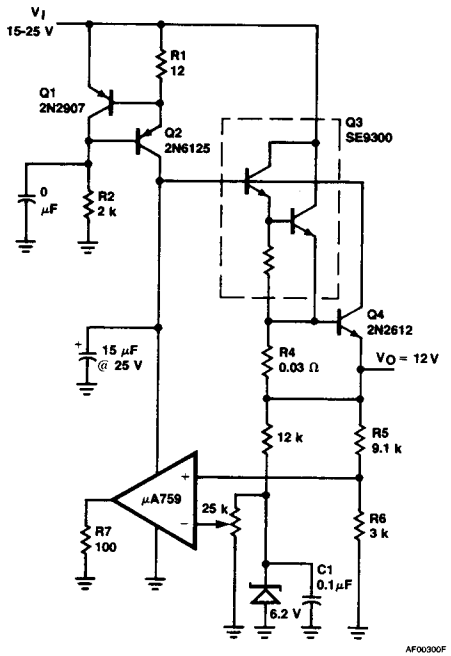

Features
Excellent Load and Line Regulation
Excellent Temperature Coefficient-Depends
Largely on Tempco of the Reference Zener

Note
1. All resistor values in ohms.