SGS-THOMSON MICROELECTRONICS

UAF1780-1781-1782

DUAL 2 A LOW DROP OUT INTELLIGENT POWER SWITCH

ADVANCE DATA

- LOW POWER DISSIPATION (LOW V_{SAT} : 0.6 V @ 2 A)
- ALL INPUTS ARE OPERATIONAL WITH CONTROL SIGNALS HIGHER THAN V_{CC}
- ALL INPUTS WITHSTAND VOLTAGES LOWER THAN GROUND
- HIGH OUTPUT CURRENTS
- PROTECTION OF OUTPUT TRANSISTORS (UP TO + 32 V)
- THE OUTPUTS CAN WITHSTAND VOLTAGES LOWER THAN GROUND
- WITHSTAND ON V_{CC} SPIKES UP TO (60 V, 10 ms)
- DIFFERENTIAL INPUTS

MULTIWATT-15

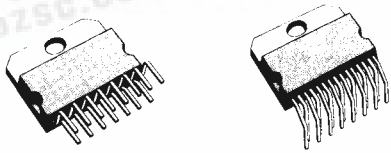

ORDER CODES :
UAF1780SP
UAF1782SP
UAF1780HSP
UAF1782HSP

DIP-16/2

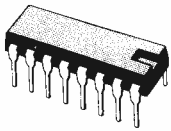

ORDER CODE :
UAF1780DP-1781DP

DESCRIPTION

The UAF1780-1781-1782 are dual interface circuits delivering high output currents and capable of driving any type of load.

An on-chip dc/dc conversion unit in conjuction with a few low-cost external components (a low value inductor and a low voltage capacitor) are implemented to limit the saturation voltage thereby optimizing the efficiency.

The devices are particularly well protected against destructive overloads. Each output implements a current limit circuitry, a desaturation monitoring unit for the detection of overloads and short-circuits, and a thermal protection feature.

Corresponding output is turned off in case of prolonged desaturation or excessive internal dissipation. This condition is reflected by a low level on ALARM output terminal. This protection unit can be reactivated by applying a logic low signal to RESET input.

However, for inductive loads, a delay is imposed on signal applied to this RESET input so as to prevent a rapid and premature conduction of output transistors.

A logic high signal applied to STROBE input will disable both power outputs.

The devices operates within a supply voltage range of + 8 V to + 32 V.

PIN CONNECTIONS

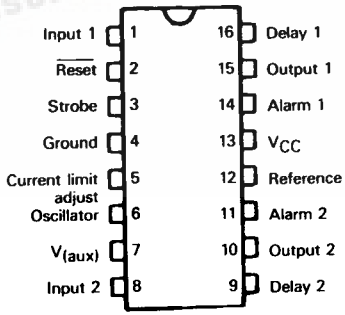

PIN CONNECTIONS

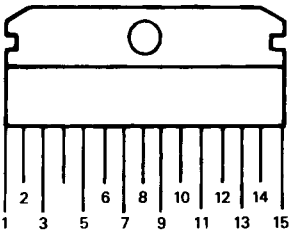

1 - Oscillator
2 - $V_{(aux)}$
3 - Input 2
4 - Delay 2
5 - Alarm 2
6 - Reference
7 - Output 2
8 - Ground
9 - V_{CC}
10 - Output 1
11 - Alarm 1
12 - Delay 1
13 - Input 1
14 - $\overline{\text{Reset}}$
15 - Strobe

ABSOLUTE MAXIMUM RATINGS

Symbol	Parameter	Value	Unit
V_{CC} (*)	Supply Voltage	+ 35	V
V_{I1} V_{I2} V_{reset} V_{strobe}	Input Voltages	30 to + 55	V
I_O	Output Current	Internally Limited	A
I_L	Current In DC/DC Converter Inductance	0.4	A
P_{tot}	Total Power Dissipation	Internally Limited	W
T_{oper}	Operating Free-air Temperature Range	− 40 to + 85	°C
T_j	Junction Temperature	+ 150	°C

* + 60 V (10 mS)

THERMAL DATA

$R_{th(j-c)}$	Maximum Junction–case Thermal Resistance	DIP.16 Multiwatt	25 2.5	°C/W
$R_{th(j-a)}$	Maximum Junction–ambient Thermal Resistance	DIP.16 Multiwatt	70 40	°C/W

BLOCK DIAGRAM

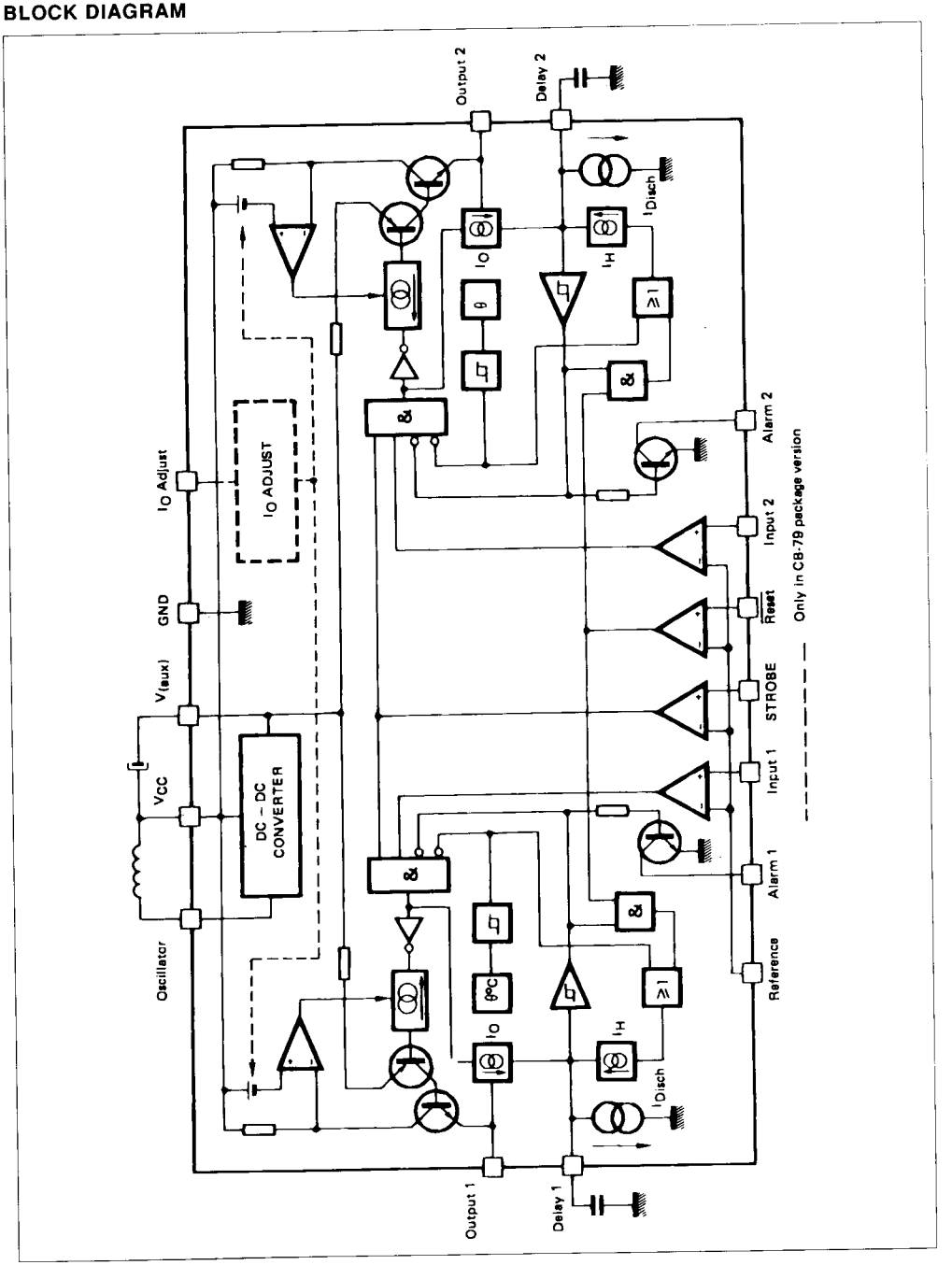

ELECTRICAL CHARACTERISTICS

V_{CC} = + 24 V, – 40 °C, ≤ T_{amb} ≤ + 85 °C (unless otherwise specified)

Symbol	Parameter	Min.	Typ.	Max.	Unit
V_{CC}	Supply Voltage	8		32	V
I_{CC}	Supply Current Input 1 = Input 2 : Low Input 1 = Input 1 : High, I_O = 2 x 2 A	–	 7 25	 32	mA
I_I	Input Current (all inputs) $V_I > V_{ref}$ $V_I < V_{ref}$		 15 0	 50	
I_{OHA}	High Level Alarm Output Leakage Current (V_A = + 10 V)		0	10	µA
V_{OLA}	Low Level Alarm Output Voltage (I_A = + 10 mA)		1.1	1.3	V
$V_{CC} - V_O$	Power Outputs Dropout Voltage I_O = 0.5 A I_O = 1 A I_O = 2 A		 0.15 0.3 0.6	 0.25 0.4 0.7	V
I_{OL}	Power Outputs Leakage Current			100	µA
t_{reset}	Reset Pulse Duration (C1 = C2 = 1 µF)		400		mS
t_d	Delay Time before Desaturation Monitoring Unit Becomes Active (C1 = C2 = 1µF) $V_{CC} - V_O$ = + 12 V $V_{CC} - V_O$ = + 24 V $V_{CC} - V_O$ = + 32 V		 20 10 5		mS
V_{ref}	Reference Input Voltage	1.4		55	V
I_{ref}	Reference Input Current (V_{ref} = 1.4 V) All Inputs < V_{ref} All Inputs > V_{ref}	 – 1	 80 0	 150 + 1	µA
I_O	Available Output Current UAF1780DP $R_O = \infty$ R_O = 2 KΩ UAF1780SP UAF1781DP $R_O = \infty$ R_O = 2 KΩ UAF1782SP	 2.5 1 2.5 2 1 2			A
$V_{CC} - V_O$	Maximum Output Voltage Swing		–	50	V
$V_{aux} - V_{CC}$	DC/DC Output Voltage 0.5 A < I_O < 2 A (each output) CO = 47 µF, L = 100 µH	–	1.25	–	V

Fig. 1 – DIP. 16 PACKAGE.

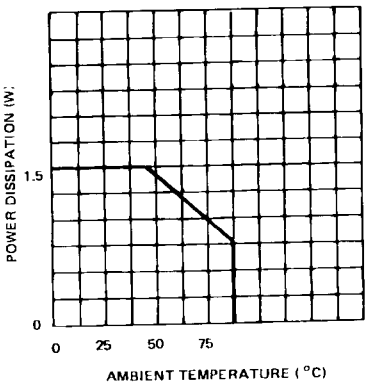

Fig 2 – MULTIWATT PACKAGE.

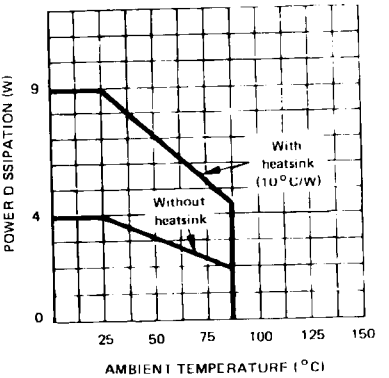

Fig. 3 – AVAILABLE OUTPUT CURRENT VS EXTERNAL RESISTANCE VALUE DIP. 16 PACKAGE.

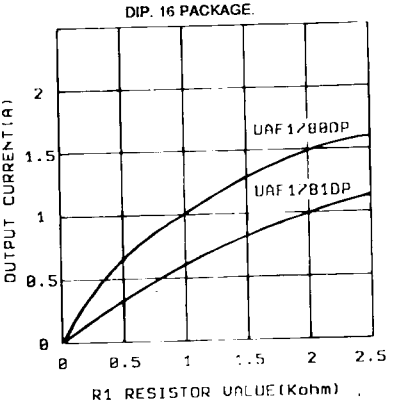

Fig 4 – SATURATION VOLTAGE VS OUTPUT CURRENT.

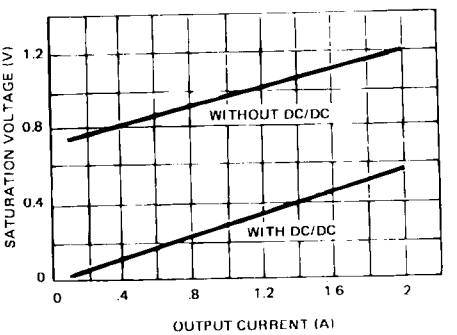

Fig 5 – RESPONSE TIME.

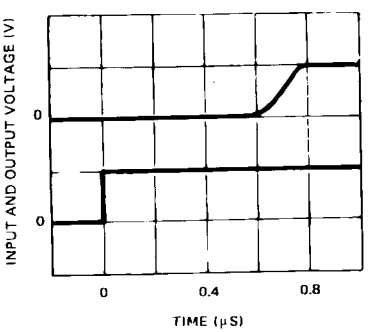

Fig. 6 – RESPONSE TIME.

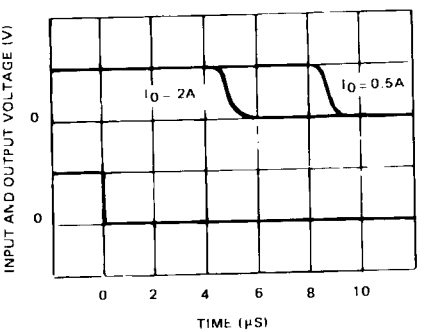

Figure 7 : Typical Application.

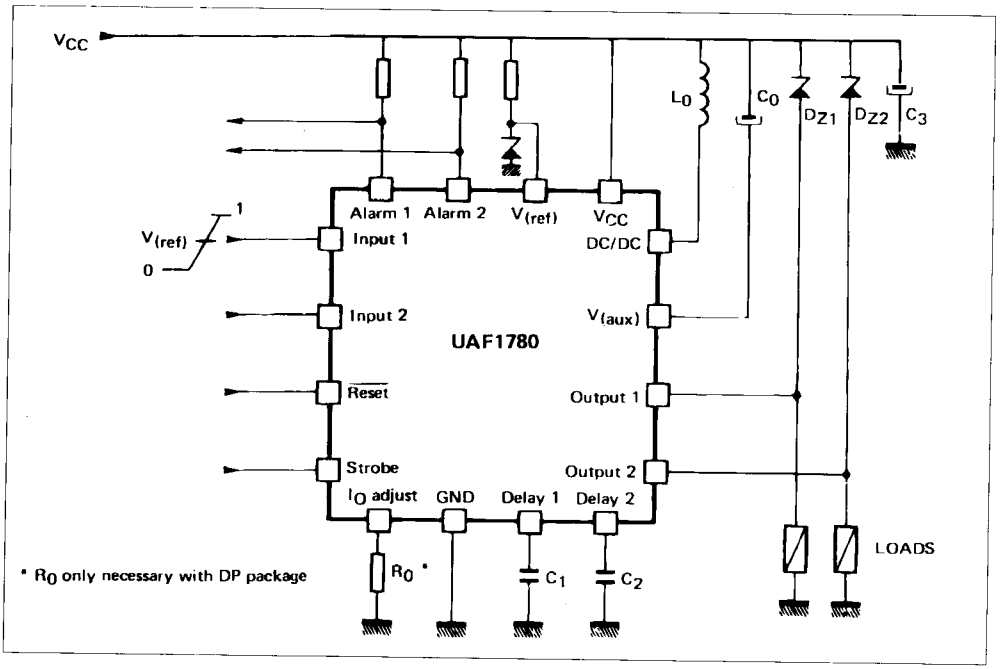

- L_O and C_O are the external elements of the dc/dc converter. Typical values and characteristics of these components are as follows :
  For L_O : - inductance = 100 µH (tolerance ± 10%)
  - maximal current ≥ 400 mA

Size Evaluation For dc/dc Inductance

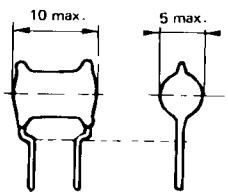

For C_O : The value of this capacitor is not critical, a capacitor of C1 ≥ 47 F, Vn ≥ 6.3 V will be suitable for the majority of the applications.

- The on-chip dc/dc converter can be disabled by connecting $V_{(aux)}$ terminal to V_{CC} and leaving "Oscillator" pin floating.

- C_1 and C_2 implement two distinct functions :
  - response time required by the desaturation monitoring unit to become active.
  - time delay imposed on each power output prior to conduction.

$$t_d = \frac{C \cdot 3.5\ V}{7\ \mu A}$$

With $C_2 = C_3 = 1\ \mu F$, the outputs are protected against voltage transients of as high as + 32 V and the response time of the desaturation monitoring unit is 400 ms.

- D_{Z1} and D_{Z2} Zener Diodes are required in the case of inductive loads. V_Z of these diodes should be < 60 V.

- R_O determines the value of maximum output current (DIP package). Its value is given in curve 3, where output current values are plotted against the corresponding values of this resistor.