查询CD4049UB供应商 捷多邦，专业PCB打样工厂，24小时加急出货

Data sheet acquired from Harris Semiconductor
SCHS046I

August 1998 - Revised May 2004

CMOS Hex Buffer/Converters

The CD4049UB and CD4050B devices are inverting and non-inverting hex buffers, respectively, and feature logic-level conversion using only one supply voltage (V_{CC}). The input-signal high level (V_{IH}) can exceed the V_{CC} supply voltage when these devices are used for logic-level conversions. These devices are intended for use as CMOS to DTL/TTL converters and can drive directly two DTL/TTL loads. (V_{CC} = 5V, $V_{OL} \leq$ 0.4V, and $I_{OL} \geq$ 3.3mA.)

The CD4049UB and CD4050B are designated as replacements for CD4009UB and CD4010B, respectively. Because the CD4049UB and CD4050B require only one power supply, they are preferred over the CD4009UB and CD4010B and should be used in place of the CD4009UB and CD4010B in all inverter, current driver, or logic-level conversion applications. In these applications the CD4049UB and CD4050B are pin compatible with the CD4009UB and CD4010B respectively, and can be substituted for these devices in existing as well as in new designs. Terminal No. 16 is not connected internally on the CD4049UB or CD4050B, therefore, connection to this terminal is of no consequence to circuit operation. For applications not requiring high sink-current or voltage conversion, the CD4069UB Hex Inverter is recommended.

Features

- CD4049UB Inverting
- CD4050B Non-Inverting
- High Sink Current for Driving 2 TTL Loads
- High-To-Low Level Logic Conversion
- 100% Tested for Quiescent Current at 20V
- Maximum Input Current of 1µA at 18V Over Full Package Temperature Range; 100nA at 18V and 25°C
- 5V, 10V and 15V Parametric Ratings

Applications

- CMOS to DTL/TTL Hex Converter
- CMOS Current “Sink” or “Source” Driver
- CMOS High-To-Low Logic Level Converter

Ordering Information

PART NUMBER	TEMP. RANGE (^{o}C)	PACKAGE
CD4049UBF3A	-55 to 125	16 Ld CERDIP
CD4050BF3A	-55 to 125	16 Ld CERDIP
CD4049UBD	-55 to 125	16 Ld SOIC
CD4049UBDR	-55 to 125	16 Ld SOIC
CD4049UBDT	-55 to 125	16 Ld SOIC
CD4049UBDW	-55 to 125	16 Ld SOIC
CD4049UBDWR	-55 to 125	16 Ld SOIC
CD4049UBE	-55 to 125	16 Ld PDIP
CD4049UBNSR	-55 to 125	16 Ld SOP
CD4049UBPW	-55 to 125	16 Ld TSSOP
CD4049UBPWR	-55 to 125	16 Ld TSSOP
CD4050BD	-55 to 125	16 Ld SOIC
CD4050BDR	-55 to 125	16 Ld SOIC
CD4050UBDT	-55 to 125	16 Ld SOIC
CD4050BDW	-55 to 125	16 Ld SOIC
CD4050BDWR	-55 to 125	16 Ld SOIC
CD4050BE	-55 to 125	16 Ld PDIP
CD4050NSR	-55 to 125	16 Ld SOP
CD4050BPW	-55 to 125	16 Ld TSSOP
CD4050BPWR	-55 to 125	16 Ld TSSOP

NOTE: When ordering, use the entire part number. The suffix R denotes tape and reel. The suffix T denotes a small-quantity reel of 250.

Pinouts

CD4049UB (PDIP, CERDIP, SOIC, SOP, TSSOP)
TOP VIEW

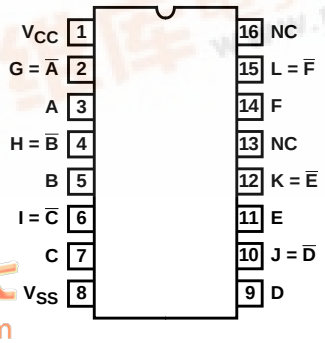

CD4050B (PDIP, CERDIP, SOIC, SOP)
TOP VIEW

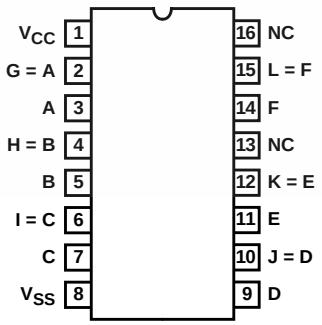

找PDF 维库一下 pdf.dzsc.com

CAUTION: These devices are sensitive to electrostatic discharge; follow proper IC Handling Procedures.

Functional Block Diagrams

CD4049UB

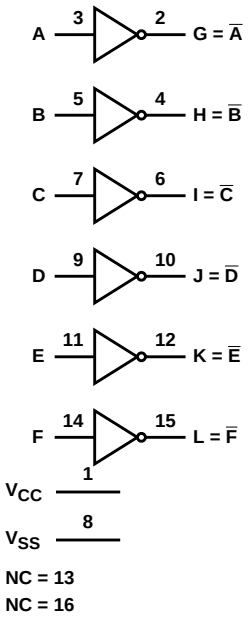

CD4050B

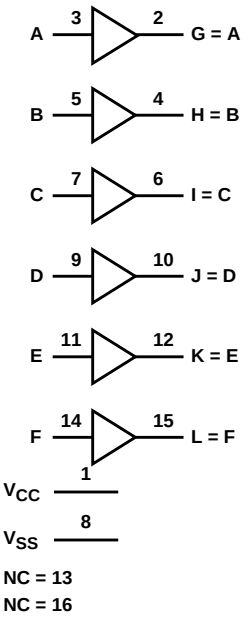

Schematic Diagrams

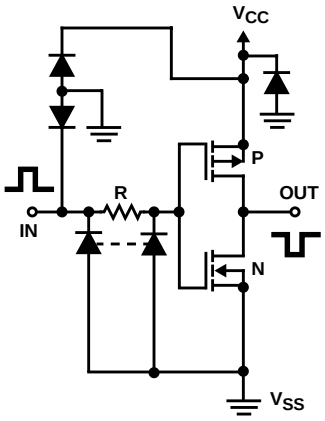

FIGURE 1A. SCHEMATIC DIAGRAM OF CD4049UB, 1 OF 6 IDENTICAL UNITS

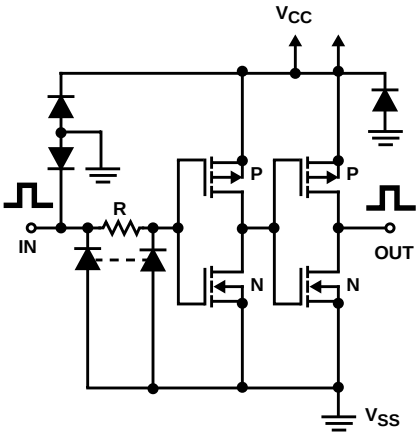

FIGURE 1B. SCHEMATIC DIAGRAM OF CD4050B, 1 OF 6 IDENTICAL UNITS

Absolute Maximum Ratings

Supply Voltage (V+ to V-) . . . . . -0.5V to 20V
DC Input Current, Any One Input . . . . . ±10mA

Operating Conditions

Temperature Range . . . . . -55°C to 125°C

Thermal Information

Package Thermal Impedance, θ_{JA} (see Note1):
E (PDIP) Package . . . . . 67°C/W
D (SOIC) Package . . . . . 73°C/W
DW (SOIC) Package . . . . . 57°C/W
NS (SOP) Package . . . . . 64°C/W
PW (TSSOP) Package . . . . . 108°C/W
Maximum Junction Temperature (Plastic Package) . . . . . .150°C
Maximum Storage Temperature Range . . . . . 65°C to 150°C
Maximum Lead Temperature (Soldering 10s) . . . . . .265°C
SOIC - Lead Tips Only

CAUTION: Stresses above those listed in "Absolute Maximum Ratings" may cause permanent damage to the device. This is a stress only rating and operation of the device at these or any other conditions above those indicated in the operational sections of this specification is not implied.

NOTE:

1. The package thermal impedance is calculated in accordance with JESD 51-7.

DC Electrical Specifications

PARAMETER	TEST CONDITIONS			LIMITS AT INDICATED TEMPERATURE (^{o}C)							UNITS
								25			
	V_O (V)	V_{IN} (V)	V_{CC} (V)	-55	-40	85	125	MIN	TYP	MAX	
Quiescent Device Current I_{DD} (Max)	-	0,5	5	1	1	30	30	-	0.02	1	µA
	-	0,10	10	2	2	60	60	-	0.02	2	µA
	-	0,15	15	4	4	120	120	-	0.02	4	µA
	-	0,20	20	20	20	600	600	-	0.04	20	µA
Output Low (Sink) Current I_{OL} (Min)	0.4	0,5	4.5	3.3	3.1	2.1	1.8	2.6	5.2	-	mA
	0.4	0,5	5	4	3.8	2.9	2.4	3.2	6.4	-	mA
	0.5	0,10	10	10	9.6	6.6	5.6	8	16	-	mA
	1.5	0,15	15	26	25	20	18	24	48	-	mA
Output High (Source) Current I_{OH} (Min)	4.6	0,5	5	-0.81	-0.73	-0.58	-0.48	-0.65	-1.2	-	mA
	2.5	0,5	5	-2.6	-2.4	-1.9	-1.55	-2.1	-3.9	-	mA
	9.5	0,10	10	-2.0	-1.8	-1.35	-1.18	-1.65	-3.0	-	mA
	13.5	0,15	15	-5.2	-4.8	-3.5	-3.1	-4.3	-8.0	-	mA
Out Voltage Low Level V_{OL} (Max)	-	0,5	5	0.05	0.05	0.05	0.05	-	0	0.05	V
	-	0,10	10	0.05	0.05	0.05	0.05	-	0	0.05	V
	-	0,15	15	0.05	0.05	0.05	0.05	-	0	0.05	V
Output Voltage High Level V_{OH} (Min)	-	0,5	5	4.95	4.95	4.95	4.95	4.95	5	-	V
	-	0,10	10	9.95	9.95	9.95	9.95	9.95	10	-	V
	-	0,15	15	14.95	14.95	14.95	14.95	14.95	15	-	V
Input Low Voltage, V_{IL} (Max) CD4049UB	4.5	-	5	1	1	1	1	-	-	1	V
	9	-	10	2	2	2	2	-	-	2	V
	13.5	-	15	2.5	2.5	2.5	2.5	-	-	2.5	V
Input Low Voltage, V_{IL} (Max) CD4050B	0.5	-	5	1.5	1.5	1.5	1.5	-	-	1.5	V
	1	-	10	3	3	3	3	-	-	3	V
	1.5	-	15	4	4	4	4	-	-	4	V

DC Electrical Specifications (Continued)

PARAMETER	TEST CONDITIONS			LIMITS AT INDICATED TEMPERATURE (^oC)							UNITS
								25			
	V_O (V)	V_{IN} (V)	V_{CC} (V)	-55	-40	85	125	MIN	TYP	MAX	
Input High Voltage, V_{IH} Min CD4049UB	0.5	-	5	4	4	4	4	4	-	-	V
	1	-	10	8	8	8	8	8	-	-	V
	1.5	-	15	12.5	12.5	12.5	12.5	12.5	-	-	V
Input High Voltage, V_{IH} Min CD4050B	4.5	-	5	3.5	3.5	3.5	3.5	3.5	-	-	V
	9	-	10	7	7	7	7	7	-	-	V
	13.5	-	15	11	11	11	11	11	-	-	V
Input Current, I_{IN} Max	-	0,18	18	±0.1	±0.1	±1	±1	-	$\pm10^{-5}$	±0.1	µA

AC Electrical Specifications

$T_A = 25^oC$, Input t_r, t_f = 20ns, C_L = 50pF, R_L = 200kΩ

PARAMETER	TEST CONDITIONS		LIMITS (ALL PACKAGES)		UNITS
	V_{IN}	V_{CC}	TYP	MAX	
Propagation Delay Time Low to High, t_{PLH} CD4049UB	5	5	60	120	ns
	10	10	32	65	ns
	10	5	45	90	ns
	15	15	25	50	ns
	15	5	45	90	ns
Propagation Delay Time Low to High, t_{PLH} CD4050B	5	5	70	140	ns
	10	10	40	80	ns
	10	5	45	90	ns
	15	15	30	60	ns
	15	5	40	80	ns
Propagation Delay Time High to Low, t_{PHL} CD4049UB	5	5	32	65	ns
	10	10	20	40	ns
	10	5	15	30	ns
	15	15	15	30	ns
	15	5	10	20	ns
Propagation Delay Time High to Low, t_{PHL} CD4050B	5	5	55	110	ns
	10	10	22	55	ns
	10	5	50	100	ns
	15	15	15	30	ns
	15	5	50	100	ns
Transition Time, Low to High, t_{TLH}	5	5	80	160	ns
	10	10	40	80	ns
	15	15	30	60	ns
Transition Time, High to Low, t_{THL}	5	5	30	60	ns
	10	10	20	40	ns
	15	15	15	30	ns

AC Electrical Specifications $T_A = 25^oC$, Input t_r, t_f = 20ns, C_L = 50pF, R_L = 200kΩ **(Continued)**

PARAMETER	TEST CONDITIONS		LIMITS (ALL PACKAGES)		UNITS
	V_{IN}	V_{CC}	TYP	MAX	
Input Capacitance, C_{IN} CD4049UB	-	-	15	22.5	pF
Input Capacitance, C_{IN} CD4050B	-	-	5	7.5	pF

Typical Performance Curves

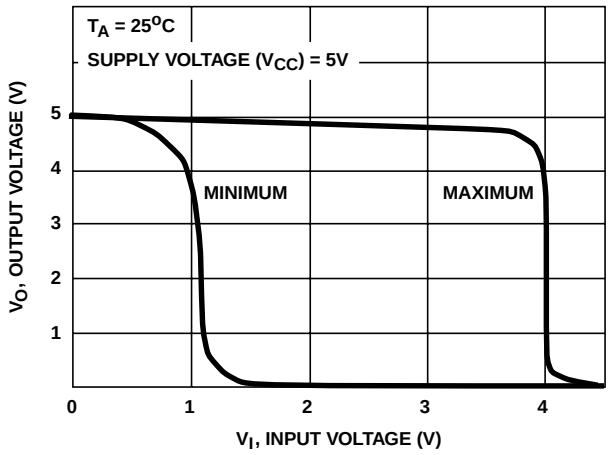

FIGURE 2. MINIMUM AND MAXIMUM VOLTAGE TRANSFER CHARACTERISTICS FOR CD4049UB

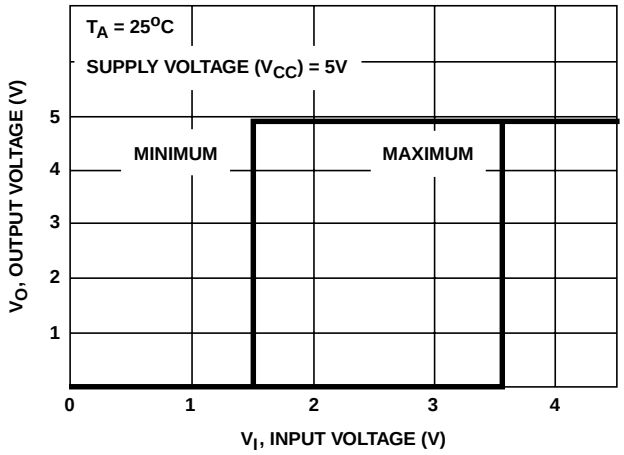

FIGURE 3. MINIMUM AND MAXIMUM VOLTAGE TRANSFER CHARACTERISTICS FOR CD4050B

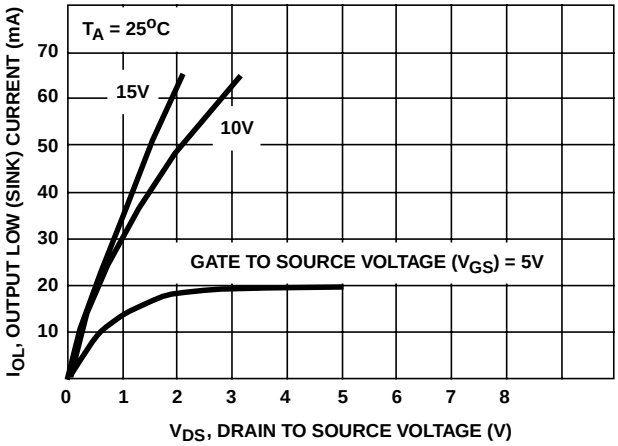

FIGURE 4. TYPICAL OUTPUT LOW (SINK) CURRENT CHARACTERISTICS

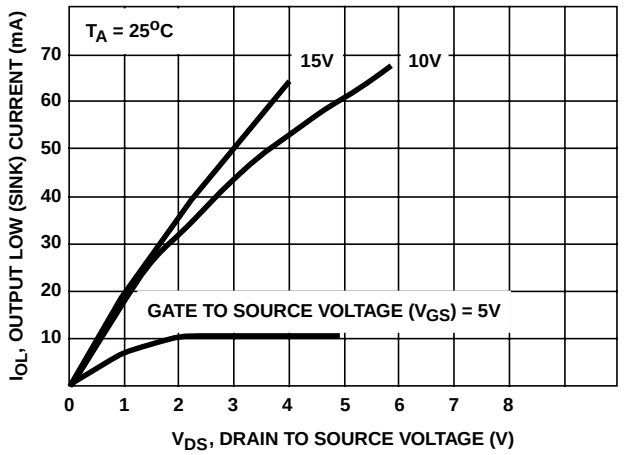

FIGURE 5. MINIMUM OUTPUT LOW (SINK) CURRENT DRAIN CHARACTERISTICS

Typical Performance Curves (Continued)

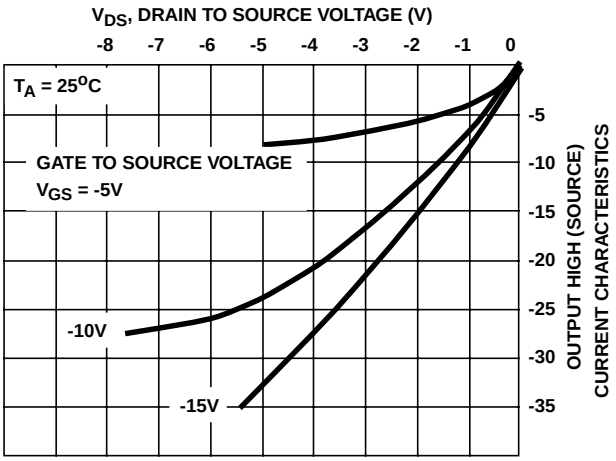

FIGURE 6. TYPICAL OUTPUT HIGH (SOURCE) CURRENT CHARACTERISTICS

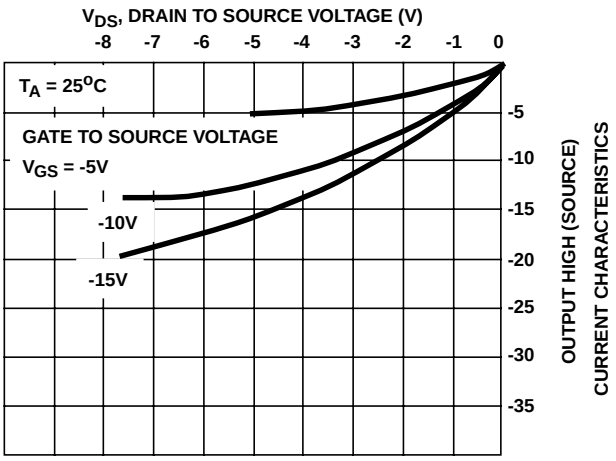

FIGURE 7. MINIMUM OUTPUT HIGH (SOURCE) CURRENT CHARACTERISTICS

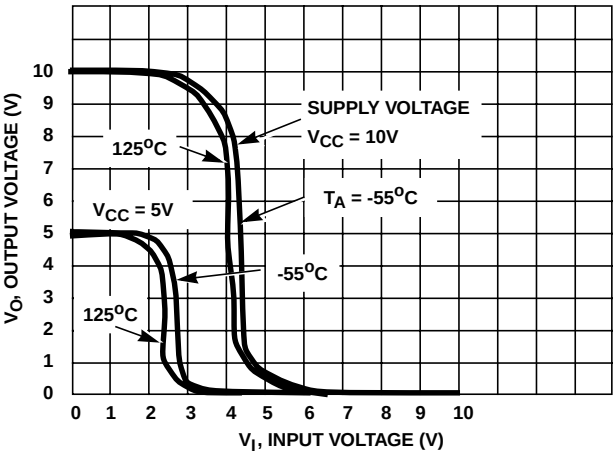

FIGURE 8. TYPICAL VOLTAGE TRANSFER CHARACTERISTICS AS A FUNCTION OF TEMPERATURE FOR CD4049UB

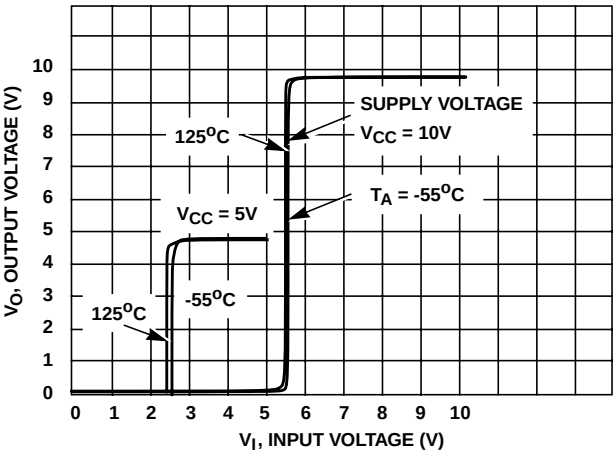

FIGURE 9. TYPICAL VOLTAGE TRANSFER CHARACTERISTICS AS A FUNCTION OF TEMPERATURE FOR CD4050B

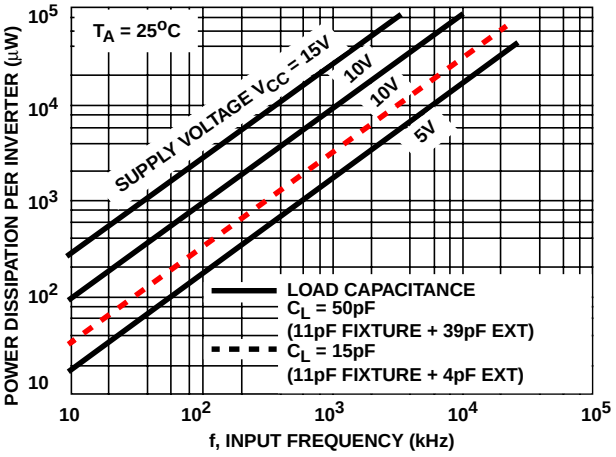

FIGURE 10. TYPICAL POWER DISSIPATION vs FREQUENCY CHARACTERISTICS

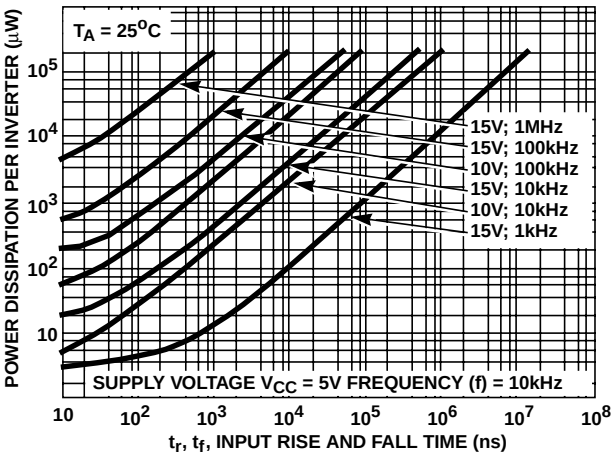

FIGURE 11. TYPICAL POWER DISSIPATION vs INPUT RISE AND FALL TIMES PER INVERTER FOR CD4049UB

Typical Performance Curves (Continued)

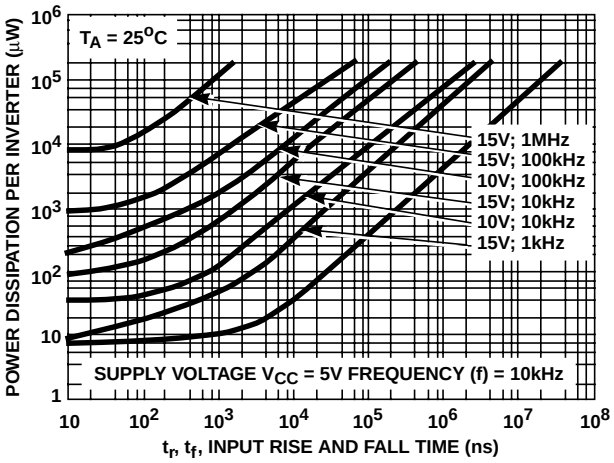

FIGURE 12. TYPICAL POWER DISSIPATION vs INPUT RISE AND FALL TIMES PER INVERTER FOR CD4050B

Test Circuits

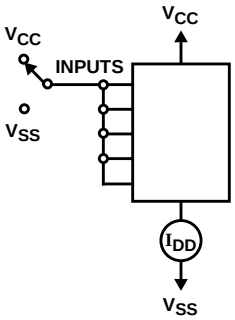

FIGURE 13. QUIESCENT DEVICE CURRENT TEST CIRCUIT

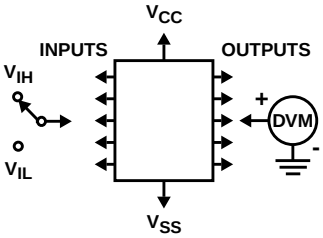

NOTE: Test any one input with other inputs at V_{CC} or V_{SS}.

FIGURE 14. INPUT VOLTAGE TEST CIRCUIT

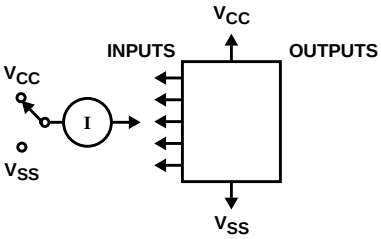

NOTE: Measure inputs sequentially, to both V_{CC} and V_{SS} connect all unused inputs to either V_{CC} or V_{SS}.

FIGURE 15. INPUT CURRENT TEST CIRCUIT

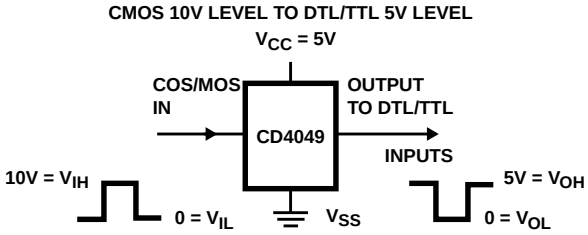

In Terminal - 3, 5, 7, 9, 11, or 14
Out Terminal - 2, 4, 6, 10, 12 or 15
V_{CC} Terminal - 1
V_{SS} Terminal - 8

FIGURE 16. LOGIC LEVEL CONVERSION APPLICATION

Test Circuits (Continued)

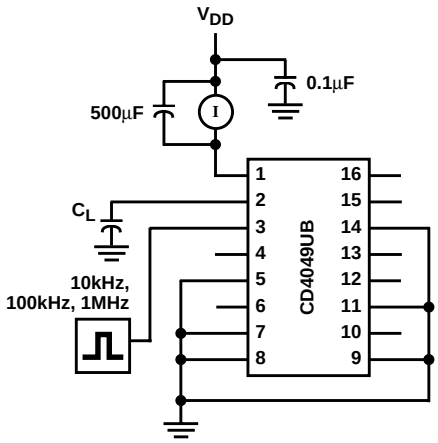

C_L INCLUDES FIXTURE CAPACITANCE

FIGURE 17. DYNAMIC POWER DISSIPATION TEST CIRCUITS

PACKAGING INFORMATION

Orderable Device	Status (1)	Package Type	Package Drawing	Pins	Package Qty	Eco Plan (2)	Lead/Ball Finish	MSL Peak Temp (3)
CD4049UBD	ACTIVE	SOIC	D	16	40	Pb-Free (RoHS)	CU NIPDAU	Level-2-260C-1 YEAR/ Level-1-235C-UNLIM
CD4049UBDR	ACTIVE	SOIC	D	16	2500	Pb-Free (RoHS)	CU NIPDAU	Level-2-260C-1 YEAR/ Level-1-235C-UNLIM
CD4049UBDT	ACTIVE	SOIC	D	16	250	Pb-Free (RoHS)	CU NIPDAU	Level-2-260C-1 YEAR/ Level-1-235C-UNLIM
CD4049UBDW	ACTIVE	SOIC	DW	16	40	Pb-Free (RoHS)	CU NIPDAU	Level-2-250C-1 YEAR/ Level-1-235C-UNLIM
CD4049UBDWR	ACTIVE	SOIC	DW	16	2000	Pb-Free (RoHS)	CU NIPDAU	Level-2-250C-1 YEAR/ Level-1-235C-UNLIM
CD4049UBE	ACTIVE	PDIP	N	16	25	Pb-Free (RoHS)	CU NIPDAU	Level-NC-NC-NC
CD4049UBF	ACTIVE	CDIP	J	16	1	None	Call TI	Level-NC-NC-NC
CD4049UBF3A	ACTIVE	CDIP	J	16	1	None	Call TI	Level-NC-NC-NC
CD4049UBM	OBSOLETE	SOIC	D	16		None	Call TI	Call TI
CD4049UBM96	OBSOLETE	SOIC	D	16		None	Call TI	Call TI
CD4049UBNSR	ACTIVE	SO	NS	16	2000	Pb-Free (RoHS)	CU NIPDAU	Level-2-260C-1 YEAR/ Level-1-235C-UNLIM
CD4049UBPW	ACTIVE	TSSOP	PW	16	90	Pb-Free (RoHS)	CU NIPDAU	Level-1-250C-UNLIM
CD4049UBPWR	ACTIVE	TSSOP	PW	16	2000	Pb-Free (RoHS)	CU NIPDAU	Level-1-250C-UNLIM
CD4050BD	ACTIVE	SOIC	D	16	40	Pb-Free (RoHS)	CU NIPDAU	Level-2-260C-1 YEAR/ Level-1-235C-UNLIM
CD4050BDR	ACTIVE	SOIC	D	16	2500	Pb-Free (RoHS)	CU NIPDAU	Level-2-260C-1 YEAR/ Level-1-235C-UNLIM
CD4050BDT	ACTIVE	SOIC	D	16	250	Pb-Free (RoHS)	CU NIPDAU	Level-2-260C-1 YEAR/ Level-1-235C-UNLIM
CD4050BDW	ACTIVE	SOIC	DW	16	40	Pb-Free (RoHS)	CU NIPDAU	Level-2-250C-1 YEAR/ Level-1-235C-UNLIM
CD4050BDWR	ACTIVE	SOIC	DW	16	2000	Pb-Free (RoHS)	CU NIPDAU	Level-2-250C-1 YEAR/ Level-1-235C-UNLIM
CD4050BE	ACTIVE	PDIP	N	16	25	Pb-Free (RoHS)	CU NIPDAU	Level-NC-NC-NC
CD4050BF	ACTIVE	CDIP	J	16	1	None	Call TI	Level-NC-NC-NC
CD4050BF3A	ACTIVE	CDIP	J	16	1	None	Call TI	Level-NC-NC-NC
CD4050BM	OBSOLETE	SOIC	D	16		None	Call TI	Call TI
CD4050BNSR	ACTIVE	SO	NS	16	2000	Pb-Free (RoHS)	CU NIPDAU	Level-2-260C-1 YEAR/ Level-1-235C-UNLIM
CD4050BPW	ACTIVE	TSSOP	PW	16	90	Pb-Free (RoHS)	CU NIPDAU	Level-1-250C-UNLIM
CD4050BPWR	ACTIVE	TSSOP	PW	16	2000	Pb-Free (RoHS)	CU NIPDAU	Level-1-250C-UNLIM
JM38510/05553BEA	ACTIVE	CDIP	J	16	1	None	Call TI	Level-NC-NC-NC
JM38510/05554BEA	ACTIVE	CDIP	J	16	1	None	Call TI	Level-NC-NC-NC

(1) The marketing status values are defined as follows:
ACTIVE: Product device recommended for new designs.

LIFEBUY: TI has announced that the device will be discontinued, and a lifetime-buy period is in effect.
NRND: Not recommended for new designs. Device is in production to support existing customers, but TI does not recommend using this part in a new design.
PREVIEW: Device has been announced but is not in production. Samples may or may not be available.
OBSOLETE: TI has discontinued the production of the device.

(2) Eco Plan - May not be currently available - please check http://www.ti.com/productcontent for the latest availability information and additional product content details.
None: Not yet available Lead (Pb-Free).
Pb-Free (RoHS): TI's terms "Lead-Free" or "Pb-Free" mean semiconductor products that are compatible with the current RoHS requirements for all 6 substances, including the requirement that lead not exceed 0.1% by weight in homogeneous materials. Where designed to be soldered at high temperatures, TI Pb-Free products are suitable for use in specified lead-free processes.
Green (RoHS & no Sb/Br): TI defines "Green" to mean "Pb-Free" and in addition, uses package materials that do not contain halogens, including bromine (Br) or antimony (Sb) above 0.1% of total product weight.

(3) MSL, Peak Temp. -- The Moisture Sensitivity Level rating according to the JEDECindustry standard classifications, and peak solder temperature.

Important Information and Disclaimer: The information provided on this page represents TI's knowledge and belief as of the date that it is provided. TI bases its knowledge and belief on information provided by third parties, and makes no representation or warranty as to the accuracy of such information. Efforts are underway to better integrate information from third parties. TI has taken and continues to take reasonable steps to provide representative and accurate information but may not have conducted destructive testing or chemical analysis on incoming materials and chemicals. TI and TI suppliers consider certain information to be proprietary, and thus CAS numbers and other limited information may not be available for release.

In no event shall TI's liability arising out of such information exceed the total purchase price of the TI part(s) at issue in this document sold by TI to Customer on an annual basis.

J (R–GDIP–T**) CERAMIC DUAL IN–LINE PACKAGE

14 LEADS SHOWN

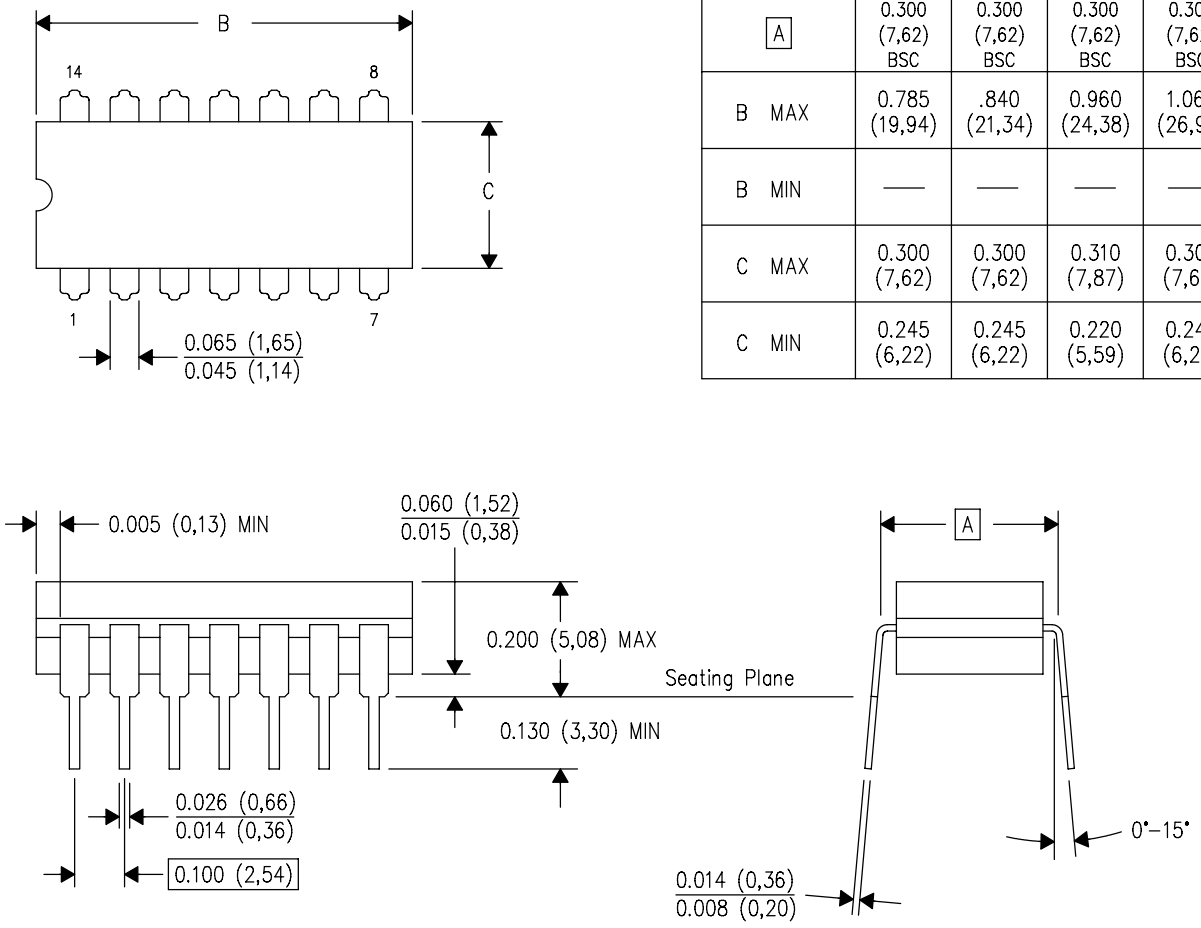

DIM \ PINS **	14	16	18	20
A	0.300 (7,62) BSC	0.300 (7,62) BSC	0.300 (7,62) BSC	0.300 (7,62) BSC
B MAX	0.785 (19,94)	.840 (21,34)	0.960 (24,38)	1.060 (26,92)
B MIN	—	—	—	—
C MAX	0.300 (7,62)	0.300 (7,62)	0.310 (7,87)	0.300 (7,62)
C MIN	0.245 (6,22)	0.245 (6,22)	0.220 (5,59)	0.245 (6,22)

4040083/F 03/03

NOTES:
A. All linear dimensions are in inches (millimeters).
B. This drawing is subject to change without notice.
C. This package is hermetically sealed with a ceramic lid using glass frit.
D. Index point is provided on cap for terminal identification only on press ceramic glass frit seal only.
E. Falls within MIL STD 1835 GDIP1–T14, GDIP1–T16, GDIP1–T18 and GDIP1–T20.

N (R–PDIP–T**) PLASTIC DUAL–IN–LINE PACKAGE

16 PINS SHOWN

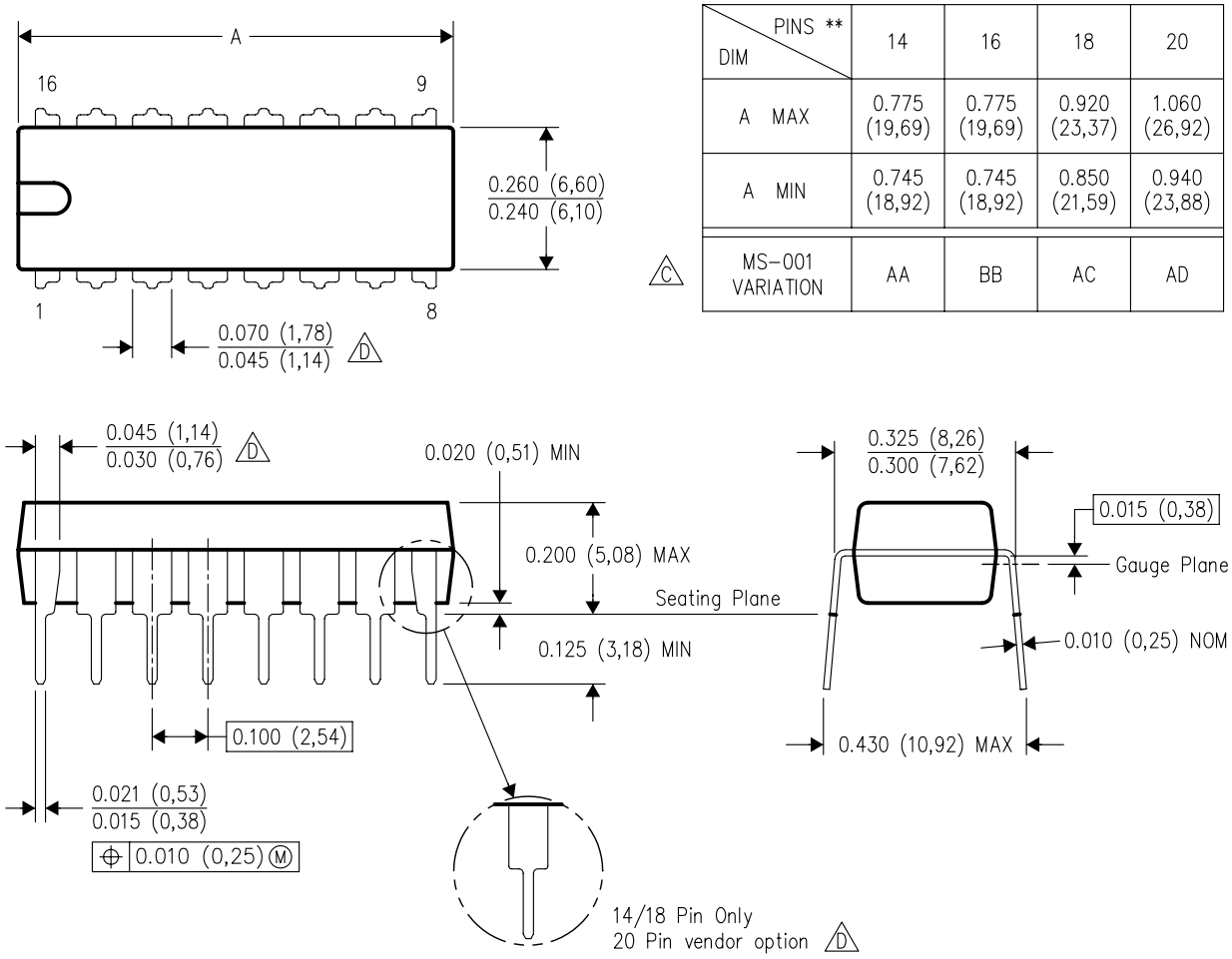

DIM \ PINS **	14	16	18	20
A MAX	0.775 (19,69)	0.775 (19,69)	0.920 (23,37)	1.060 (26,92)
A MIN	0.745 (18,92)	0.745 (18,92)	0.850 (21,59)	0.940 (23,88)
C MS–001 VARIATION	AA	BB	AC	AD

4040049/E 12/2002

NOTES:
A. All linear dimensions are in inches (millimeters).
B. This drawing is subject to change without notice.
C. Falls within JEDEC MS–001, except 18 and 20 pin minimum body length (Dim A).
D. The 20 pin end lead shoulder width is a vendor option, either half or full width.

D (R–PDSO–G16) PLASTIC SMALL–OUTLINE PACKAGE

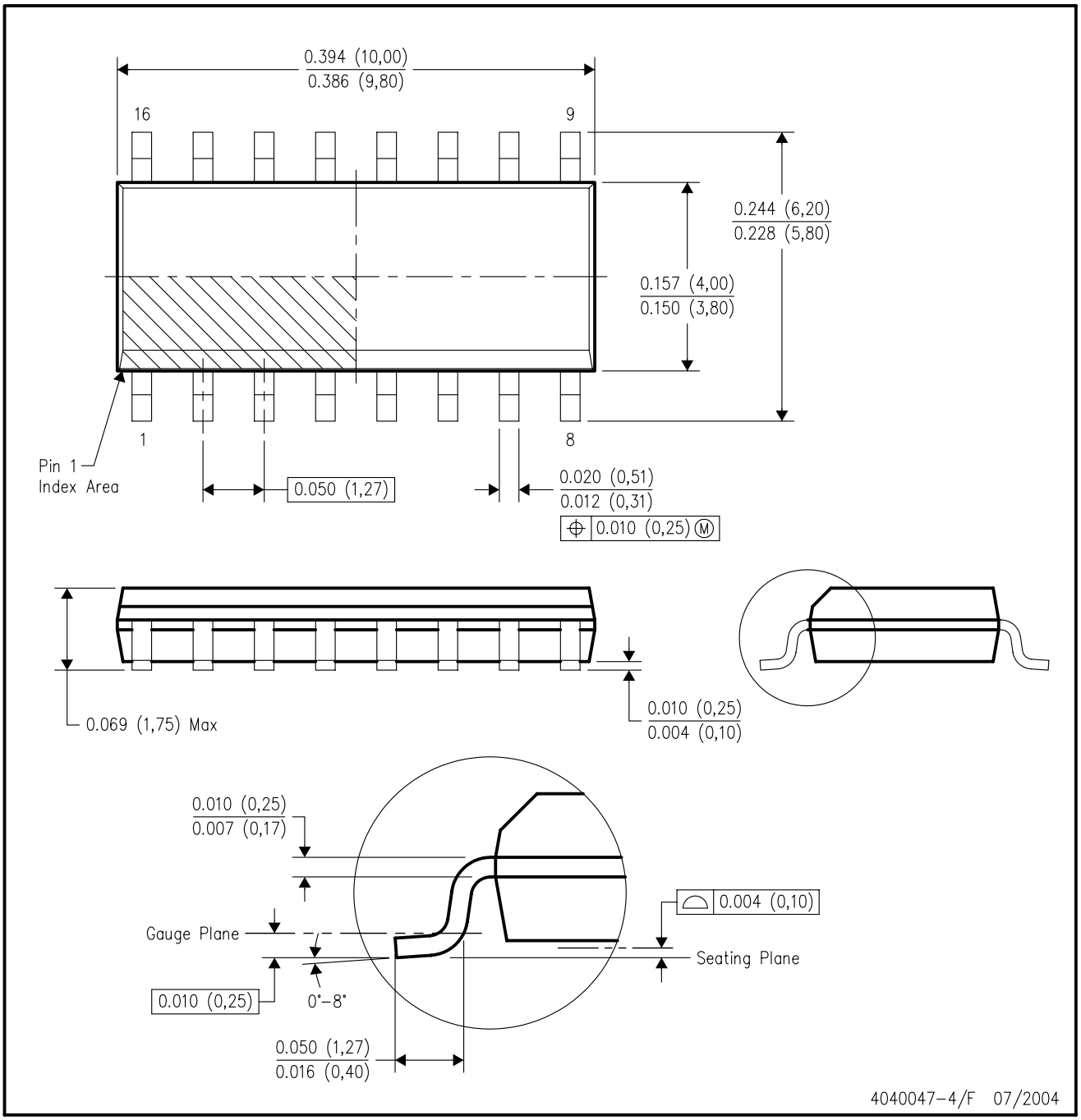

NOTES:
A. All linear dimensions are in inches (millimeters).
B. This drawing is subject to change without notice.
C. Body dimensions do not include mold flash or protrusion not to exceed 0.006 (0,15).
D. Falls within JEDEC MS–012 variation AC.

DW (R–PDSO–G16) PLASTIC SMALL–OUTLINE PACKAGE

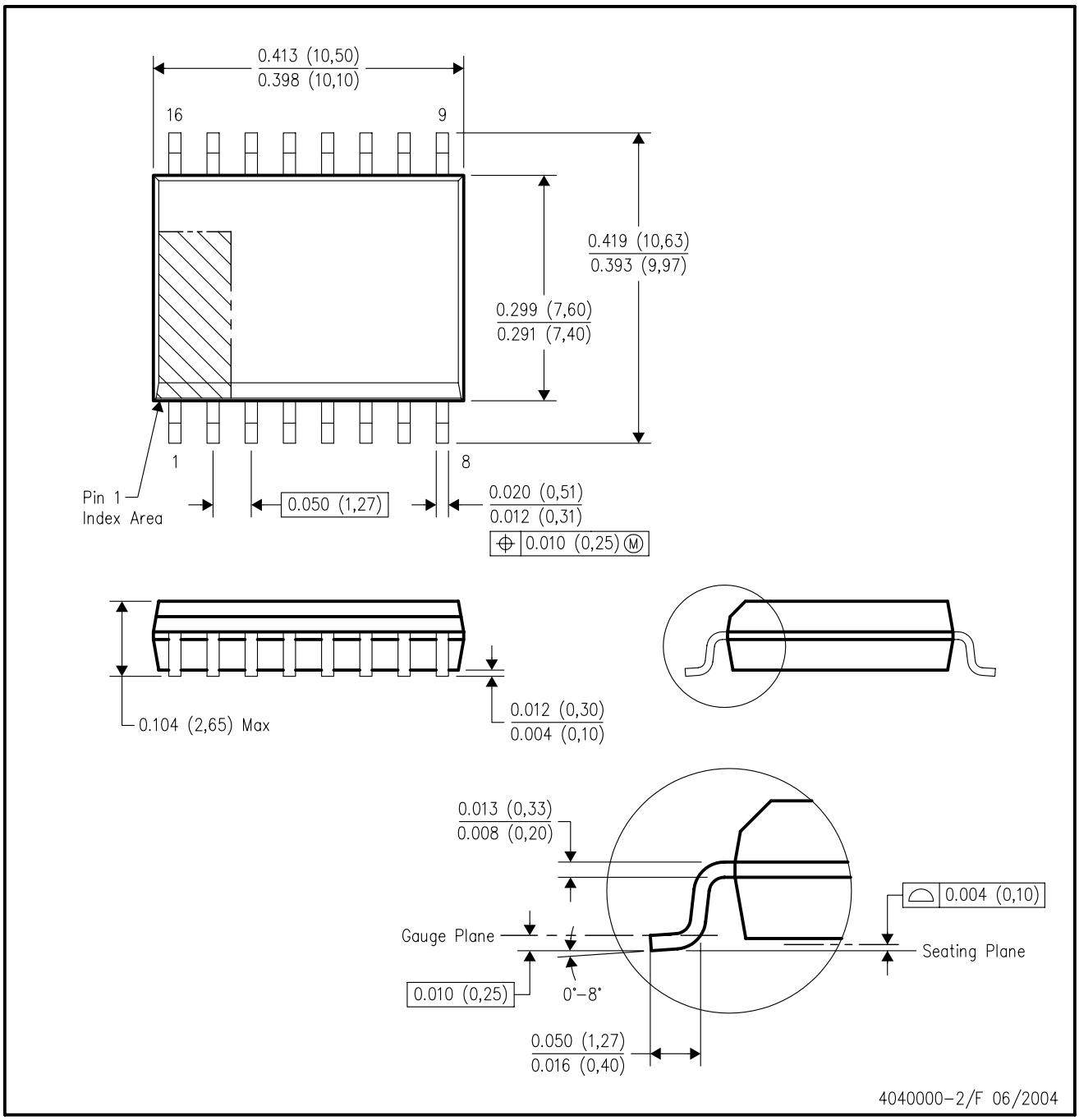

NOTES:
A. All linear dimensions are in inches (millimeters).
B. This drawing is subject to change without notice.
C. Body dimensions do not include mold flash or protrusion not to exceed 0.006 (0,15).
D. Falls within JEDEC MS–013 variation AA.

MECHANICAL DATA

NS (R-PDSO-G)** **PLASTIC SMALL-OUTLINE PACKAGE**

14-PINS SHOWN

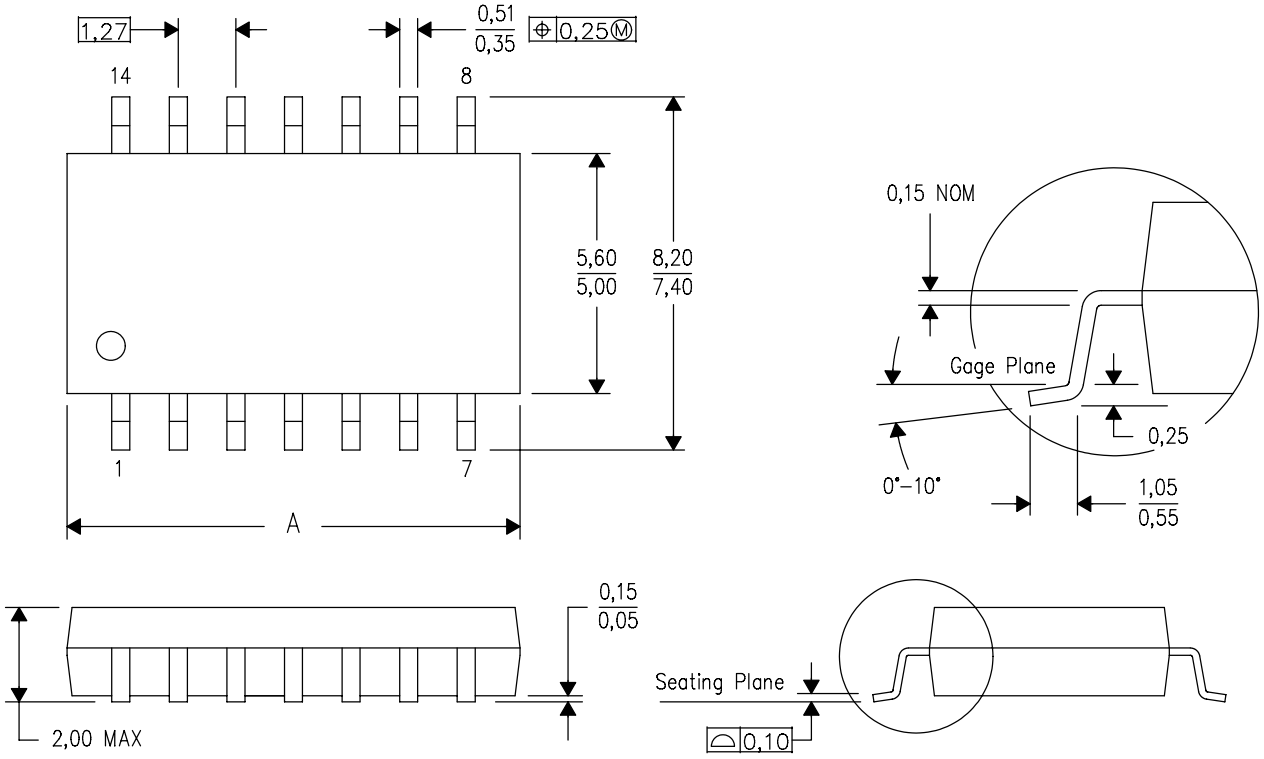

DIM \ PINS **	14	16	20	24
A MAX	10,50	10,50	12,90	15,30
A MIN	9,90	9,90	12,30	14,70

4040062/C 03/03

NOTES:
A. All linear dimensions are in millimeters.
B. This drawing is subject to change without notice.
C. Body dimensions do not include mold flash or protrusion, not to exceed 0,15.

PW (R-PDSO-G)** **PLASTIC SMALL-OUTLINE PACKAGE**

14 PINS SHOWN

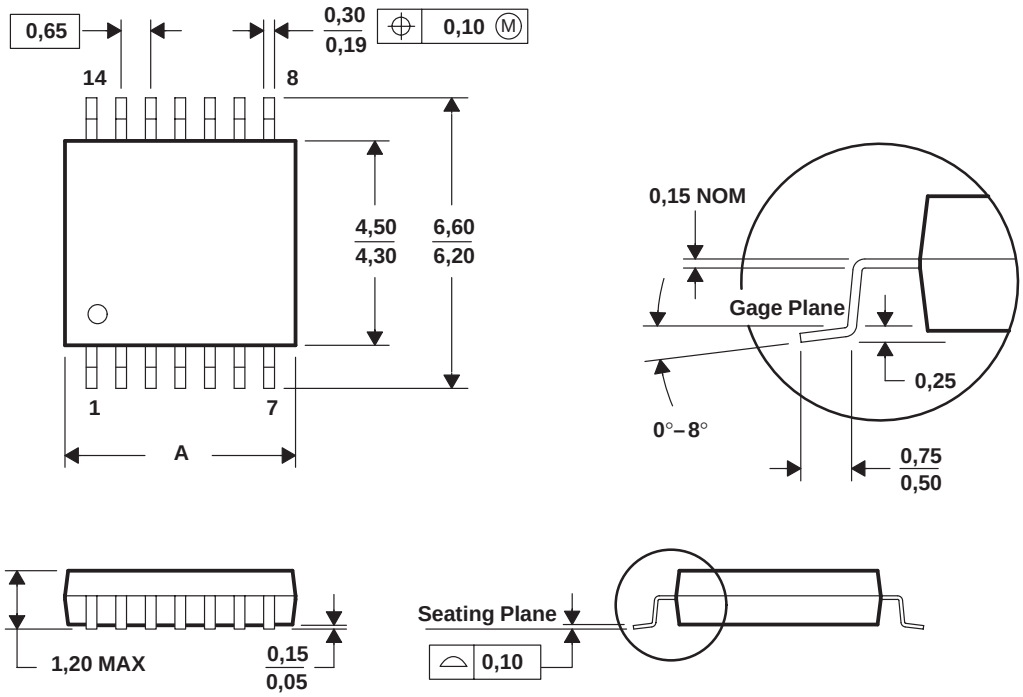

DIM \ PINS **	8	14	16	20	24	28
A MAX	3,10	5,10	5,10	6,60	7,90	9,80
A MIN	2,90	4,90	4,90	6,40	7,70	9,60

4040064/F 01/97

NOTES: A. All linear dimensions are in millimeters.
B. This drawing is subject to change without notice.
C. Body dimensions do not include mold flash or protrusion not to exceed 0,15.
D. Falls within JEDEC MO-153

IMPORTANT NOTICE

Texas Instruments Incorporated and its subsidiaries (TI) reserve the right to make corrections, modifications, enhancements, improvements, and other changes to its products and services at any time and to discontinue any product or service without notice. Customers should obtain the latest relevant information before placing orders and should verify that such information is current and complete. All products are sold subject to TI's terms and conditions of sale supplied at the time of order acknowledgment.

TI warrants performance of its hardware products to the specifications applicable at the time of sale in accordance with TI's standard warranty. Testing and other quality control techniques are used to the extent TI deems necessary to support this warranty. Except where mandated by government requirements, testing of all parameters of each product is not necessarily performed.

TI assumes no liability for applications assistance or customer product design. Customers are responsible for their products and applications using TI components. To minimize the risks associated with customer products and applications, customers should provide adequate design and operating safeguards.

TI does not warrant or represent that any license, either express or implied, is granted under any TI patent right, copyright, mask work right, or other TI intellectual property right relating to any combination, machine, or process in which TI products or services are used. Information published by TI regarding third-party products or services does not constitute a license from TI to use such products or services or a warranty or endorsement thereof. Use of such information may require a license from a third party under the patents or other intellectual property of the third party, or a license from TI under the patents or other intellectual property of TI.

Reproduction of information in TI data books or data sheets is permissible only if reproduction is without alteration and is accompanied by all associated warranties, conditions, limitations, and notices. Reproduction of this information with alteration is an unfair and deceptive business practice. TI is not responsible or liable for such altered documentation.

Resale of TI products or services with statements different from or beyond the parameters stated by TI for that product or service voids all express and any implied warranties for the associated TI product or service and is an unfair and deceptive business practice. TI is not responsible or liable for any such statements.

Following are URLs where you can obtain information on other Texas Instruments products and application solutions:

Products		**Applications**	
Amplifiers	amplifier.ti.com	Audio	www.ti.com/audio
Data Converters	dataconverter.ti.com	Automotive	www.ti.com/automotive
DSP	dsp.ti.com	Broadband	www.ti.com/broadband
Interface	interface.ti.com	Digital Control	www.ti.com/digitalcontrol
Logic	logic.ti.com	Military	www.ti.com/military
Power Mgmt	power.ti.com	Optical Networking	www.ti.com/opticalnetwork
Microcontrollers	microcontroller.ti.com	Security	www.ti.com/security
		Telephony	www.ti.com/telephony
		Video & Imaging	www.ti.com/video
		Wireless	www.ti.com/wireless

Mailing Address: Texas Instruments
Post Office Box 655303 Dallas, Texas 75265

Copyright © 2005, Texas Instruments Incorporated