M48T251Y
M48T251V

5.0 or 3.3V, 4096K TIMEKEEPER® SRAM with PHANTOM

FEATURES SUMMARY

- 5.0V OR 3.3V OPERATING VOLTAGE
- REAL TIME CLOCK KEEPS TRACK OF TENTHS/HUNDREDTHS OF SECONDS, SECONDS, MINUTES, HOURS, DAYS, DATE OF THE MONTH, MONTHS, AND YEARS
- AUTOMATIC LEAP YEAR CORRECTION VALID UP TO THE YEAR 2100
- AUTOMATIC SWITCH-OVER AND DESELECT CIRCUITRY
- CHOICE OF POWER-FAIL DESELECT VOLTAGES:
  (V_{PFD} = Power-fail Deselect Voltage):
  - M48T251Y: $4.25V \leq V_{PFD} \leq 4.50V$
  - M48T251V: $2.80V \leq V_{PFD} \leq 2.97V$
- FULL 10% V_{CC} OPERATING RANGE
- OVER 10 YEARS' DATA RETENTION IN THE ABSENCE OF POWER
- WATCH FUNCTION IS TRANSPARENT TO RAM OPERATION
- 512K x 8 NV SRAM DIRECTLY REPLACES VOLATILE STATIC RAM OR EEPROM

Figure 1. 32-pin, DIP Package

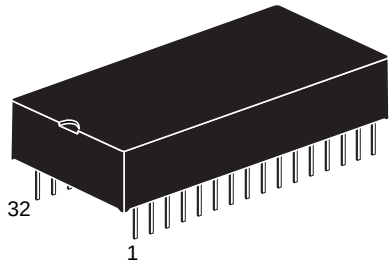

PMDIP32 (PM)

TABLE OF CONTENTS

SUMMARY DESCRIPTION

The M48T251Y/V TIMEKEEPER® RAM is a 512Kbit x 8 non-volatile static RAM and real time clock organized as 524,288 words by 8 bits. The special DIP package provides a fully integrated battery back-up memory and real time clock solution. In the event of power instability or absence, a self-contained battery maintains the timekeeping operation and provides power for a CMOS static RAM. Control circuitry monitors V_{CC} and invokes write protection to prevent data corruption in the memory and RTC.

The clock keeps track of tenths/hundredths of seconds, seconds, minutes, hours, day, date, month, and year information. The last day of the month is automatically adjusted for months with less than 31 days, including leap year correction.

The clock operates in one of two formats:

- a 12-hour mode with an AM/PM indicator; or
- a 24-hour mode

The M48T251Y/V is a 32-pin (PM) DIP module that integrates the RTC, the battery, and SRAM in one package.

The modules are shipped in plastic, anti-static tubes (see Table 14., page 22).

Figure 2. Logic Diagram

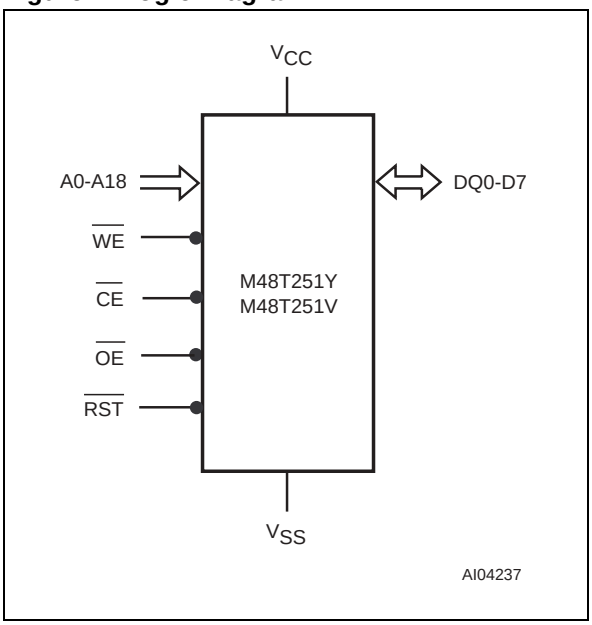

Table 1. Signal Names

A0–A18	Address Input
$\overline{RST}$	Reset Input
$\overline{CE}$	Chip Enable
$\overline{OE}$	Output Enable Input
$\overline{WE}$	WRITE Enable Input
DQ0–DQ7	Data Inputs/Outputs
V_{CC}	Supply Voltage Input
V_{SS}	Ground

Figure 3. DIP Connections

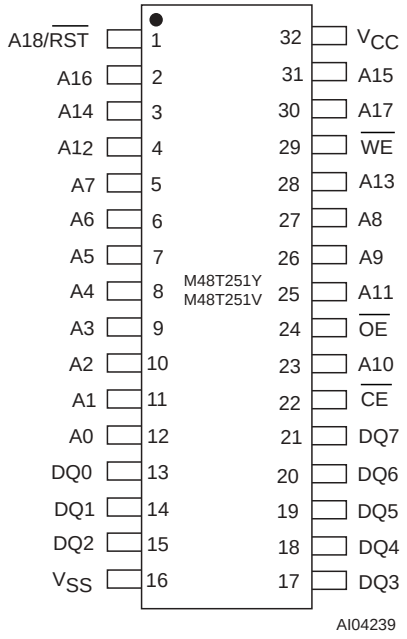

Figure 4. Block Diagram

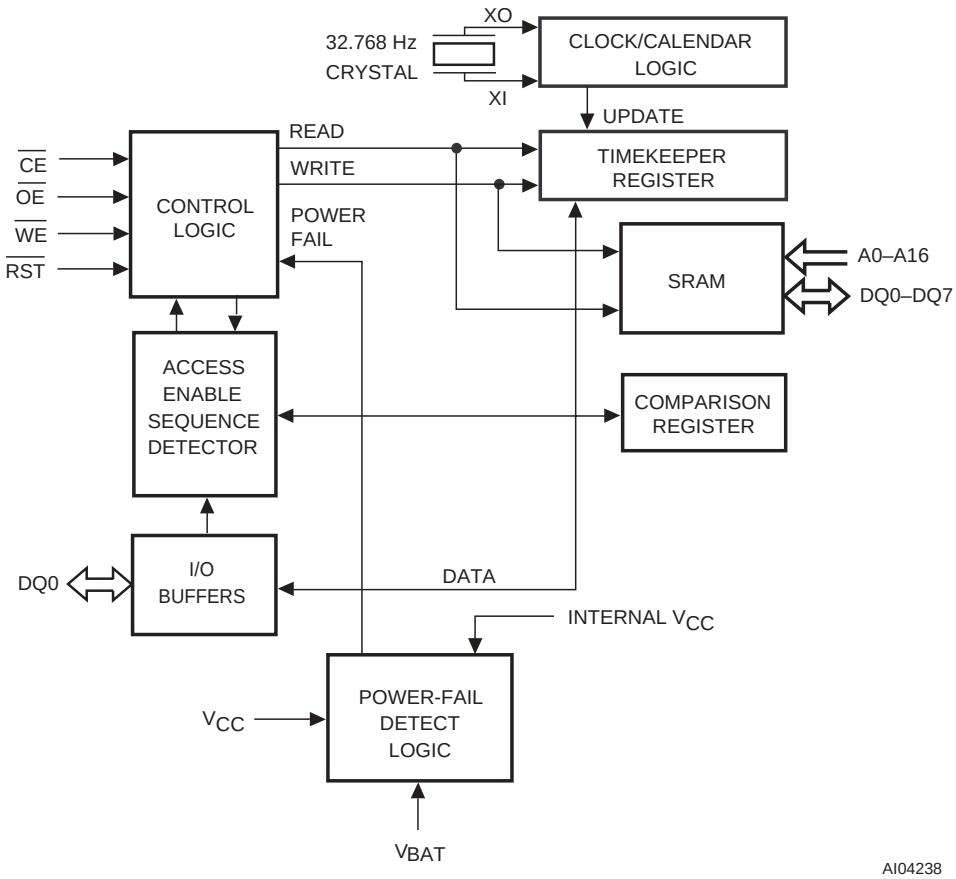

OPERATION MODES

Table 2. Operating Modes

Mode	V_{CC}	$\overline{CE}$	$\overline{OE}$	$\overline{WE}$	DQ7-DQ0	Power
Deselect	4.5V to 5.5V or 3.0V to 3.6V	V_{IH}	X	X	High-Z	Standby
WRITE		V_{IL}	X	V_{IL}	D_{IN}	Active
READ		V_{IL}	V_{IL}	V_{IH}	D_{OUT}	Active
READ		V_{IL}	V_{IH}	V_{IH}	High-Z	Active
Deselect	V_{SO} to V_{PFD} (min)(1)	X	X	X	High-Z	CMOS Standby
Deselect	$\leq V_{SO}$(1)	X	X	X	High-Z	Battery Back-Up

Note: X = V_{IH} or V_{IL}; V_{SO} = Battery Back-up Switchover Voltage
1. See Table 12., page 20 for details.

READ

A READ cycle executes whenever WRITE Enable ($\overline{WE}$) is high and Chip Enable ($\overline{CE}$) is low (see Figure 5.). The distinct address defined by the 19 address inputs (A0-A18) specifies which of the 512K bytes of data is to be accessed. Valid data will be accessed by the eight data output drivers within the specified Access Time (t_{ACC}) after the last address input signal is stable, the $\overline{CE}$ and $\overline{OE}$ access times, and their respective parameters are satisfied. When $\overline{CE}$ t_{ACC} and $\overline{OE}$ t_{ACC} are not satisfied, then data access times must be measured from the more recent $\overline{CE}$ and $\overline{OE}$ signals, with the limiting parameter being t_{CO} (for $\overline{CE}$) or t_{OE} (for $\overline{OE}$) instead of address access.

Figure 5. Memory READ Cycle

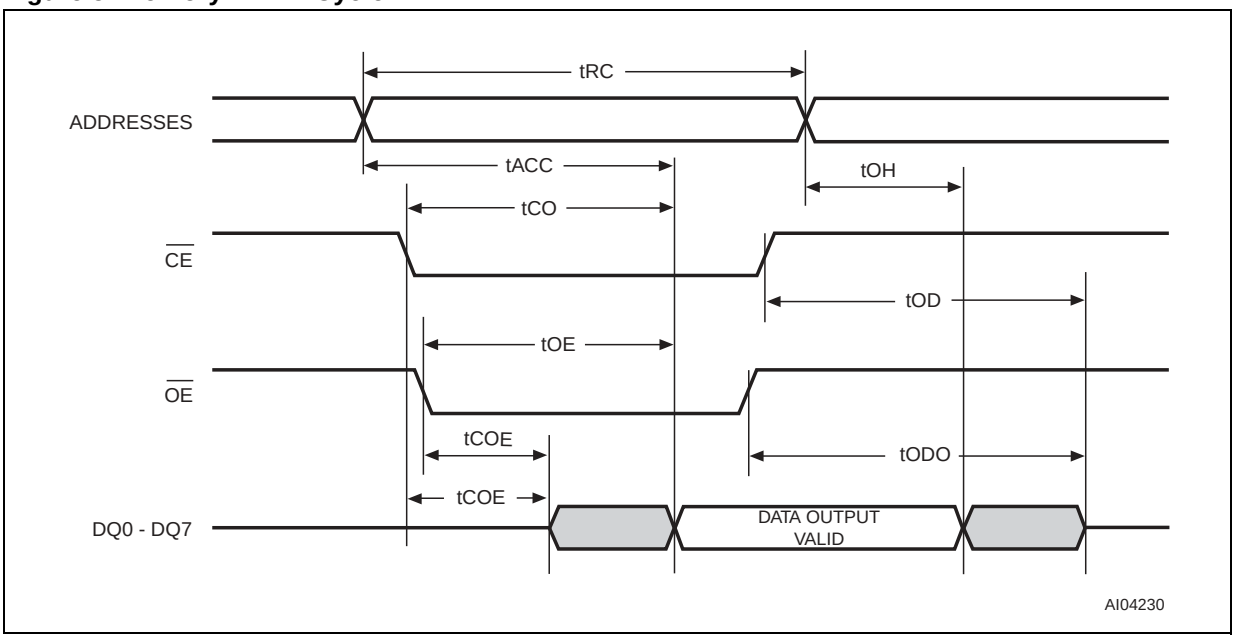

Note: $\overline{WE}$ is high for a READ cycle.

WRITE

WRITE Mode (see Figure 6.) occurs whenever $\overline{CE}$ and $\overline{WE}$ signals are low (after address inputs are stable). The most recent falling edge of $\overline{CE}$ and $\overline{WE}$ will determine when the WRITE cycle begins (the earlier, rising edge of $\overline{CE}$ or $\overline{WE}$ determines cycle termination). All address inputs must be kept stable throughout the WRITE cycle. $\overline{WE}$ must be high (inactive) for a minimum recovery time (t_{WR}) before a subsequent cycle is initiated. The $\overline{OE}$ control signal should be kept high (inactive) during the WRITE cycles to avoid bus contention. If $\overline{CE}$ and $\overline{OE}$ are low (active), $\overline{WE}$ will disable the outputs for Output Data WRITE Time (t_{ODW}) from its falling edge.

Figure 6. Memory WRITE Cycle 1

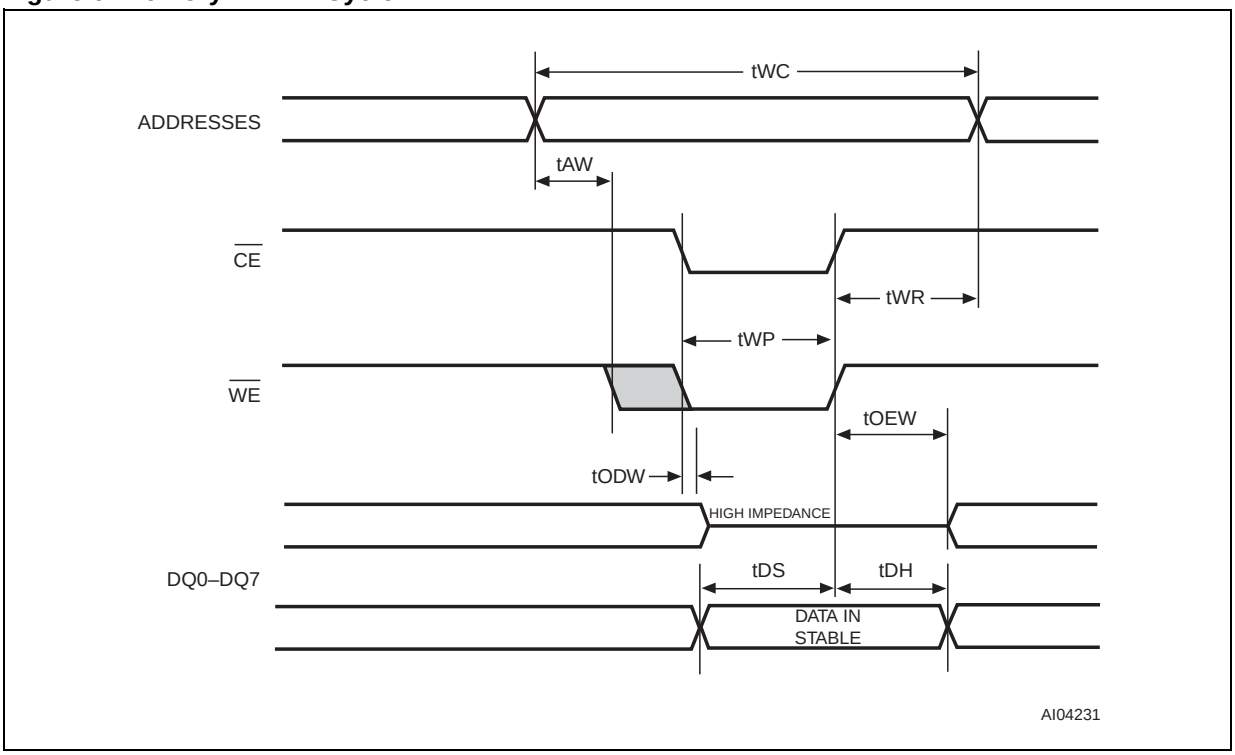

Note: 1. $\overline{OE} = V_{IH}$ or V_{IL}. If $\overline{OE} = V_{IH}$ during a WRITE cycle, the output buffers remain in a high impedance state.
2. If the $\overline{CE}$ low transition occurs simultaneously with or later than the $\overline{WE}$ low transition in WRITE Cycle 1, the output buffers remain in a high impedance state during this period.
3. If the $\overline{CE}$ high transition occurs simultaneously with the $\overline{WE}$ high transition, the output buffers remain in a high impedance state during this period.

Figure 7. Memory WRITE Cycle 2

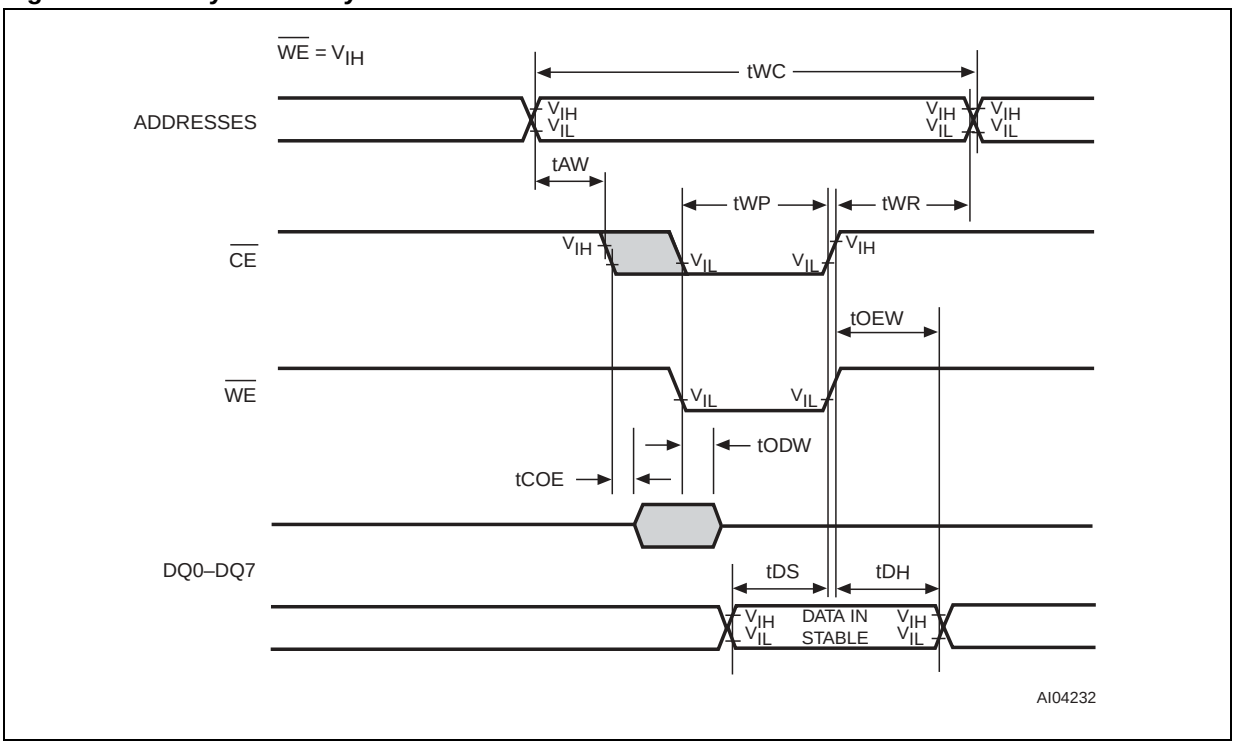

Note: 1. $\overline{OE} = V_{IH}$ or V_{IL}. If $\overline{OE} = V_{IH}$ during a WRITE cycle, the output buffers remain in a high impedance state.
2. If $\overline{WE}$ is low or the $\overline{WE}$ low transition occurs prior to or simultaneously with the $\overline{CE}$ low transition, the output buffers remain in a high impedance state during this period.

Table 3. Memory AC Characteristics, M48T251Y

Symbol		Parameter[1]	M48T251Y–70		Unit
			Min	Max	
t_{AVAV}	t_{RC}	READ Cycle Time	70		ns
t_{AVQV}	t_{ACC}	Access Time		70	ns
t_{ELQV}	t_{CO}	Chip Enable Low to Output Valid		70	ns
t_{GLQV}	t_{OE}	Output Enable Low to Output Valid		35	ns
t_{ELQX} t_{GLQX}	t_{COE}	Chip Enable or Output Enable Low to Output Transition	5		ns
t_{AXQX}	t_{OH}	Output Hold from Address Change	5		ns
t_{EHQZ} t_{GHQZ}	t_{OD}[2]	Chip Enable or Output Enable High to Output Hi-Z		25	ns
t_{WLQZ}	t_{ODW}[2]	Output Hi-Z from $\overline{WE}$		25	ns
t_{AVAV}	t_{WC}	WRITE Cycle Time	70		ns
t_{WLWH} t_{ELEH}	t_{WP}[3]	$\overline{WE}$, $\overline{CE}$ Pulse Width	50		ns
t_{AVEL} t_{AVWL}	t_{AW}	Address Setup Time	0		ns
t_{EHAX}	t_{WR1}	WRITE Recovery Time	15		ns
t_{WHAX}	t_{WR2}	Address Hold Time from $\overline{WE}$	0		ns
t_{WHQX}	t_{OEW}	Output Active from $\overline{WE}$	5		ns
t_{DVEH} t_{DVWH}	t_{DS}[4]	Data Setup Time	30		ns
t_{WHDX}	t_{DH1}[4]	Data Hold Time from $\overline{WE}$	0		ns
t_{EHDX}	t_{DH2}[4]	Data Hold Time from $\overline{CE}$	10		ns

Note: 1. Valid for Ambient Operating Temperature: T_A = 0 to 70°C; V_{CC} = 4.5 to 5.5V or 3.0 to 3.6V (except where noted).
2. These parameters are sampled with a 5 pF load are not 100% tested.
3. t_{WP} is specified as the logical AND of $\overline{CE}$ and $\overline{WE}$. t_{WP} is measured from the latter of $\overline{CE}$ or $\overline{WE}$ going low to the earlier of $\overline{CE}$ or $\overline{WE}$ going high.
4. t_{DH} and t_{DS} are measured from the earlier of $\overline{CE}$ or $\overline{WE}$ going high.

Table 4. Memory AC Characteristics, M48T251V

Symbol		Parameter[1]	M48T251V–85		Unit
			Min	Max	
t_{AVAV}	t_{RC}	READ Cycle Time	85		ns
t_{AVQV}	t_{ACC}	Access Time		85	ns
t_{ELQV}	t_{CO}	Chip Enable Low to Output Valid		85	ns
t_{GLQV}	t_{OE}	Output Enable Low to Output Valid		45	ns
t_{ELQX} t_{GLQX}	t_{COE}	Chip Enable or Output Enable Low to Output Transition	5		ns
t_{AXQX}	t_{OH}	Output Hold from Address Change	5		ns
t_{EHQZ} t_{GHQZ}	t_{OD}[2]	Chip Enable or Output Enable High to Output Hi-Z		35	ns
t_{WLQZ}	t_{ODW}[2]	Output Hi-Z from $\overline{WE}$		30	ns
t_{AVAV}	t_{WC}	WRITE Cycle Time	85		ns
t_{WLWH}	t_{WP1}[3]	WRITE Enable Pulse Width	65		ns
t_{ELEH}	t_{WP2}	Chip Enable Pulse Width	75		ns
t_{AVEL} t_{AVWL}	t_{AW}	Address Setup Time	0		ns
t_{EHAX}	t_{WR1}[4]	WRITE Recovery Time	15		ns
t_{WHAX}	t_{WR2}	Address Hold Time from $\overline{WE}$	5		ns
t_{WHQX}	t_{OEW}	Output Active from $\overline{WE}$	5		ns
t_{DVEH} t_{DVWH}	t_{DS}[5]	Data Setup Time	35		ns
t_{WHDX}	t_{DH1}[5]	Data Hold Time from $\overline{WE}$	0		ns
t_{EHDX}	t_{DH2}	Data Hold Time from $\overline{CE}$	15		ns

Note: 1. Valid for Ambient Operating Temperature: T_A = 0 to 70°C; V_{CC} = 4.5 to 5.5V or 3.0 to 3.6V (except where noted).
2. These parameters are sampled with a 5 pF load are not 100% tested.
3. t_{WP} is specified as the logical AND of $\overline{CE}$ and $\overline{WE}$. t_{WP} is measured from the latter of $\overline{CE}$ or $\overline{WE}$ going low to the earlier of $\overline{CE}$ or $\overline{WE}$ going high.
4. t_{WR} is a function of the latter occurring edge of $\overline{WE}$ or $\overline{CE}$.
5. t_{DH} and t_{DS} are measured from the earlier of $\overline{CE}$ or $\overline{WE}$ going high.

Data Retention Mode

Data can be read or written only when V_{CC} is greater than V_{PFD}. When V_{CC} is below V_{PFD} (the point at which write protection occurs), the clock registers and the SRAM are blocked from any access. When V_{CC} falls below the Battery Switch Over threshold (V_{SO}), the device is switched from V_{CC} to battery backup (V_{BAT}). RTC operation and SRAM data are maintained via battery backup until power is stable. All control, data, and address signals must be powered down when V_{CC} is powered down.

The lithium power source is designed to provide power for RTC activity as well as RTC and RAM data retention when V_{CC} is absent or unstable. The capability of this source is sufficient to power the device continuously for the life of the equipment into which it has been installed. For specification purposes, life expectancy is ten (10) years at 25°C with the internal oscillator running without V_{CC}. Each unit is shipped with its energy source disconnected, guaranteeing full energy capacity. When V_{CC} is first applied at a level greater than V_{PFD}, the energy source is enabled for battery backup operation. The actual life expectancy will be much longer if no battery energy is used (e.g., when V_{CC} is present).

PHANTOM CLOCK OPERATION

Communication with the Phantom Clock is established by pattern recognition of a serial bit-stream of 64 bits which must be matched by executing 64 consecutive WRITE cycles containing the proper data on DQ0.

All accesses which occur prior to recognition of the 64-bit pattern are directed to memory.

After recognition is established, the next 64 READ or WRITE cycles either extract or update data in the clock while disabling the memory.

Data transfer to and from the timekeeping function is accomplished with a serial bit-stream under control of Chip Enable ($\overline{CE}$), Output Enable ($\overline{OE}$), and WRITE Enable ($\overline{WE}$). Initially, a READ cycle using the $\overline{CE}$ and $\overline{OE}$ control of the clock starts the pattern recognition sequence by moving the pointer to the first bit of the 64-bit comparison register (see Figure 8., page 12).

Next, 64 consecutive WRITE cycles are executed using the $\overline{CE}$ and $\overline{WE}$ control of the device. These 64 WRITE cycles are used only to gain access to the clock. Therefore, any address to the memory is acceptable. However, the WRITE cycles generated to gain access to the Phantom Clock are also writing data to a location in the mated RAM. The preferred way to manage this requirement is to set aside just one address location in RAM as a Phantom Clock scratch pad.

When the first WRITE cycle is executed, it is compared to Bit 1 of the 64-bit comparison register. If a match is found, the pointer increments to the next location of the comparison register and awaits the next WRITE cycle.

If a match is not found, the pointer does not advance and all subsequent WRITE cycles are ignored. If a READ cycle occurs at any time during pattern recognition, the present sequence is aborted and the comparison register pointer is reset. Pattern recognition continues for a total of 64 WRITE cycles as described above until all of the bits in the comparison register have been matched. With a correct match for 64-bits, the Phantom Clock is enabled and data transfer to or from the timekeeping registers can proceed. The next 64 cycles will cause the Phantom Clock to either receive or transmit data on DQ0, depending on the level of the $\overline{OE}$ pin or the $\overline{WE}$ pin. Cycles to other locations outside the memory block can be interleaved with $\overline{CE}$ cycles without interrupting the pattern recognition sequence or data transfer sequence to the Phantom Clock.

Figure 8. Comparison Register Definition

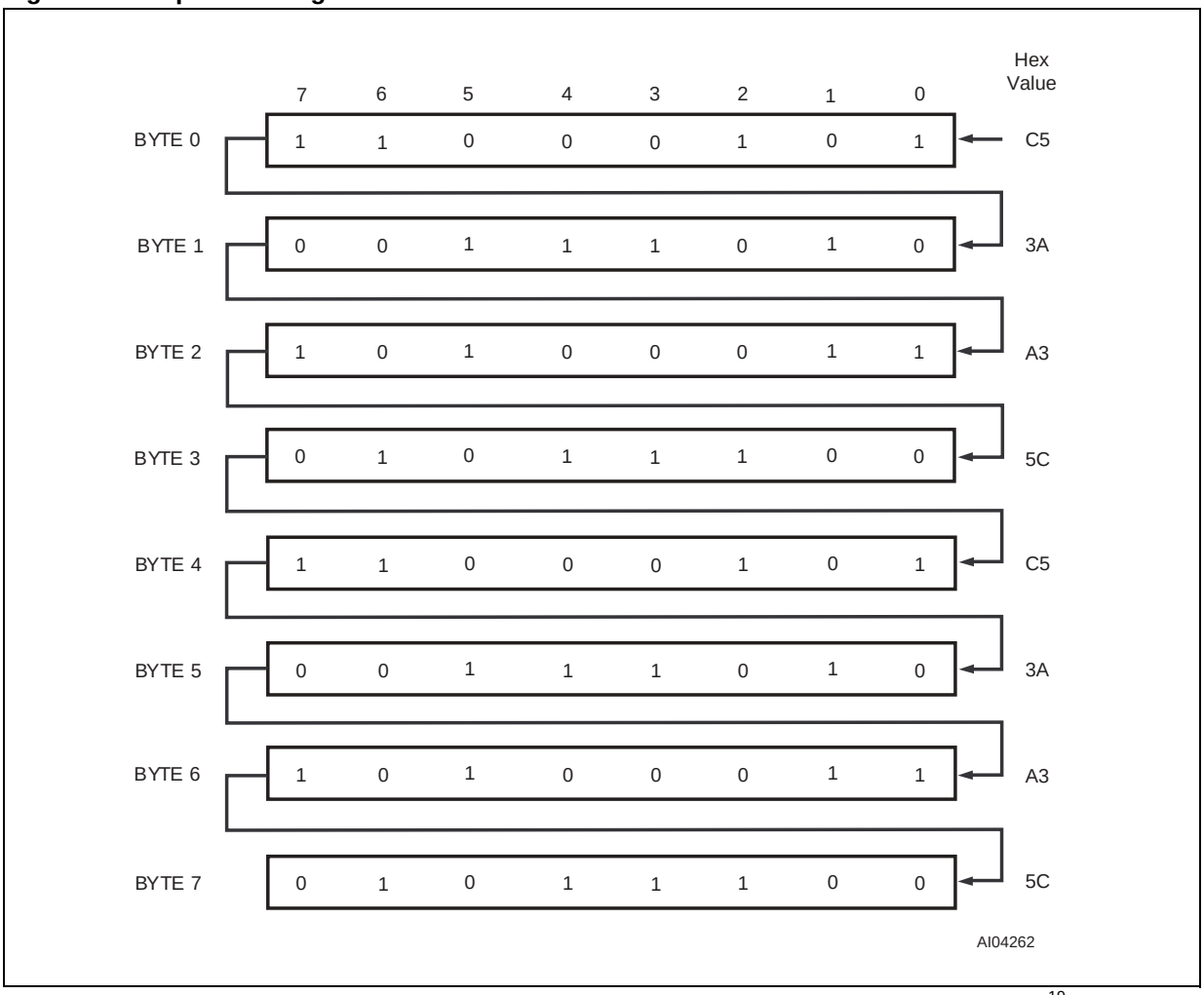

Note: The odds of this pattern being accidentally duplicated and sending aberrant entries to the RTC is less than 1 in 10^{19}. This pattern is sent to the clock LSB to MSB.

Clock Register Information

Clock information is contained in eight registers of 8 bits, each of which is sequentially accessed one (1) bit at a time after the 64-bit pattern recognition sequence has been completed. When updating the clock registers, each must be handled in groups of 8 bits. Writing and reading individual bits within a register could produce erroneous results. These READ/WRITE registers are defined in the clock register map (see Table 5.).

Data contained in the clock registers is in Binary Coded Decimal format (BCD). Reading and writing the registers is always accomplished by stepping through all eight registers, starting with Bit 0 of Register 0 and ending with Bit 7 of Register 7.

Clock Accuracy

The RTC is guaranteed to keep time accuracy to with ±1 minute per month at 25°C. The clock is factory-tuned with special calibration elements, and does not require additional calibration. Moderate temperature deviation will have a negligible effect in most applications.

AM-PM/12/24 Mode

Bit 7 of the hours register is defined as the 12-hour or 24-hour mode select bit. When it is high, the 12-hour mode is selected. In the 12-hour mode, Bit 5 is the AM/PM bit with the logic high being “PM.” In the 24-hour mode, Bit 5 is the second 10-hour bit (20-23 hours).

Oscillator and Reset Bits

Bits 4 and 5 of the day register are used to control the reset and oscillator functions. Bit 4 controls the reset pin input. When the reset bit is set to logic '1,' the Reset Input pin is ignored. When the reset bit logic is set to '0,' a low input on the reset pin will cause the device to abort data transfer without changing data in the timekeeping registers. Reset operates independently of all other inputs. Bit 5 controls the oscillator. When set to logic '0,' the oscillator turns on and the RTC/calendar begins to increment.

Zero Bits

Registers 1, 2, 3, 4, 5, and 6 contain one (1) or more bits that will always read logic '0.' When writing to these locations, either a logic '1' or '0' is acceptable.

Table 5. Phantom Clock Register Map

									Function/Range BCD Format	
Register	**D7**	**D6**	**D5**	**D4**	**D3**	**D2**	**D1**	**D0**		
0	0.1 Seconds				0.01 Seconds				Seconds	00-99
1	0	10 Seconds			Seconds				Seconds	00-59
2	0	10 Minutes			Minutes				Minutes	00-59
3	12/24	0	10 / A/P	Hrs	Hours (24 Hour Format)				Hours	01-12/ 00-23
4	0	0	$\overline{OSC}$	$\overline{RST}$	0	Day of the Week			Day	01-7
5	0	0	10 date		Date: Day of the Month				Date	01-31
6	0	0	0	10M	Month				Month	01-12
7	10 Years				Year				Year	00-99

Keys: A/P = AM/PM Bit
12/24 = 12 or 24-hour mode Bit
$\overline{OSC}$ = Oscillator Bit
$\overline{RST}$ = Reset Bit
0 = Must be set to '0'

Figure 9. Phantom Clock READ Cycle

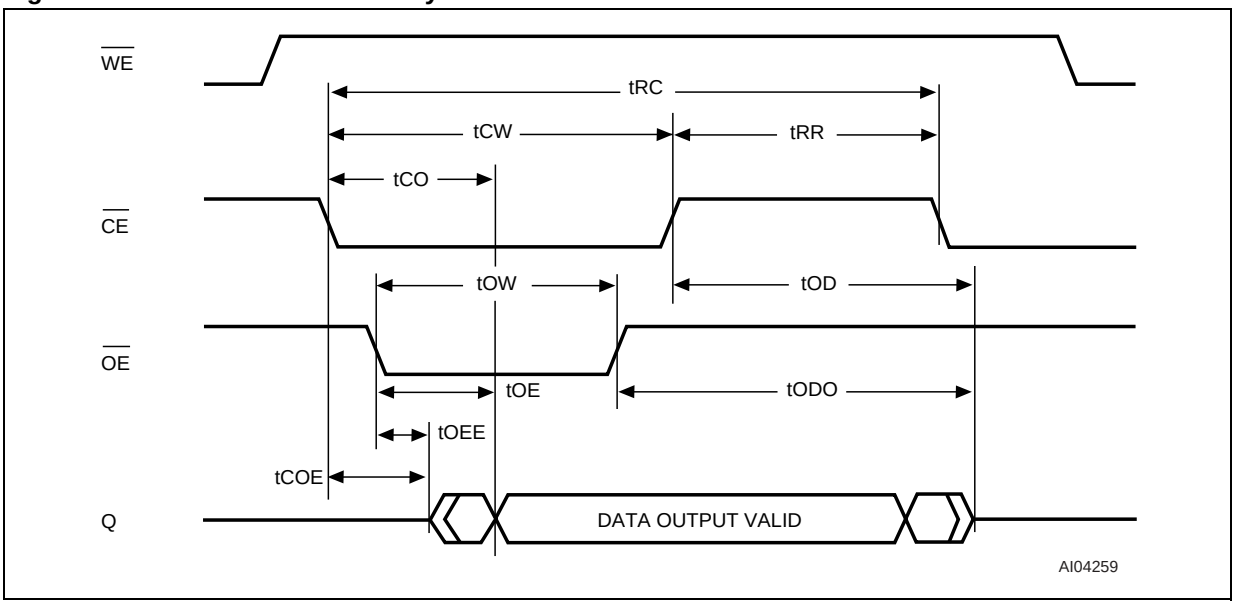

Figure 10. Phantom Clock WRITE Cycle

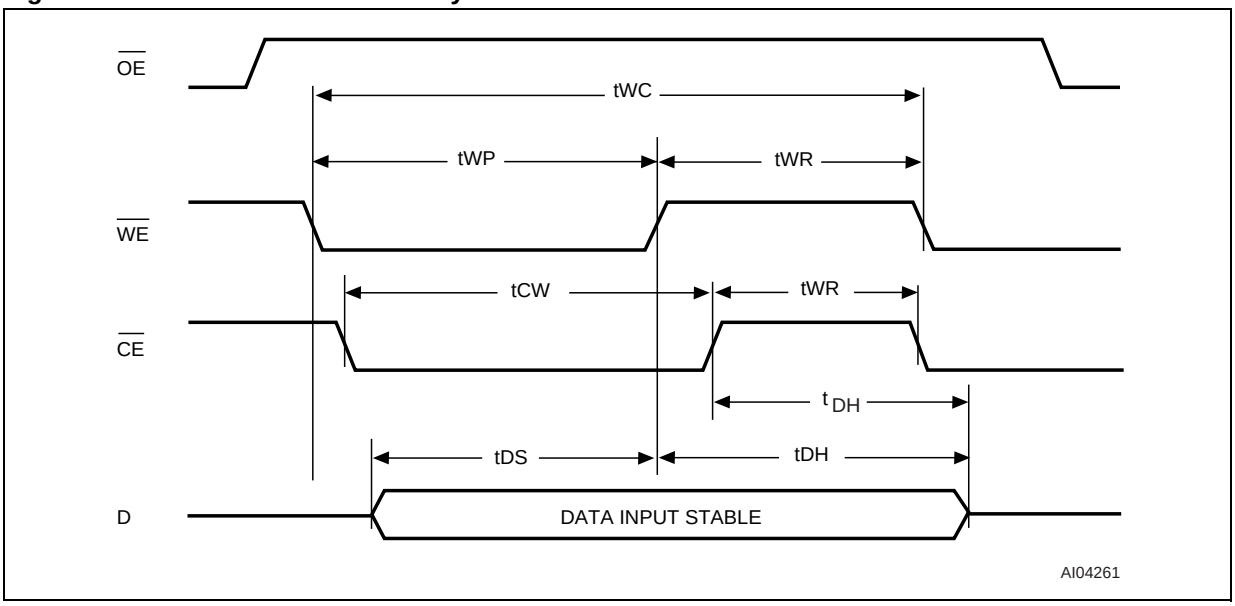

Figure 11. Phantom Clock Reset

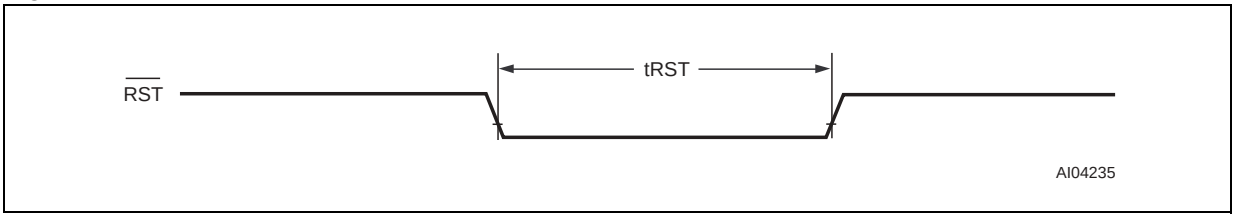

Table 6. Phantom Clock AC Characteristics (M48T251Y)

Symbol		Parameter[1]	Min	Typ	Max	Unit
t_{AVAV}	t_{RC}	READ Cycle Time	65			ns
t_{ELQV}	t_{CO}	$\overline{CE}$ Access Time			55	ns
t_{GLQV}	t_{OE}	$\overline{OE}$ Access Time			55	ns
t_{ELQX}	t_{COE}	$\overline{CE}$ to Output Low Z	5			ns
t_{GLQX}	t_{OEE}	$\overline{OE}$ to Output Low Z	5			ns
t_{EHQZ}	t_{OD}[2]	$\overline{CE}$ to Output High Z			25	ns
t_{GHQZ}	t_{ODO}[2]	$\overline{OE}$ to Output High Z			25	ns
	t_{RR}	READ Recovery	10			ns
t_{AVAV}	t_{WC}	WRITE Cycle Time	65			ns
t_{WLWH}	t_{WP}[3]	WRITE Pulse Width	55			ns
t_{EHAX}	t_{WR}[4]	WRITE Recovery	10			ns
t_{DVEH}	t_{DS}[5]	Data Setup Time	30			ns
t_{WHDX}	t_{DH1}[5]	Data Hold Time from $\overline{WE}$	0			ns
t_{EHDX}	t_{DH2}[5]	Data Hold Time from $\overline{CE}$	0			ns
t_{ELEH}	t_{CW}	$\overline{CE}$ Pulse Width	55			ns
	t_{RST}	$\overline{RST}$ Pulse Width	65			ns

Note: 1. Valid for Ambient Operating Temperature: T_A = 0 to 70°C; V_{CC} = 4.5 to 5.5V or 3.0 to 3.6V (except where noted).
2. These parameters are sampled with a 5 pF load and are not 100% tested.
3. t_{WP} is specified as the logical AND of $\overline{CE}$ and $\overline{WE}$. t_{WP} is measured from the latter of $\overline{CE}$ or $\overline{WE}$ going low to the earlier of $\overline{CE}$ or $\overline{WE}$ going high.
4. t_{WR} is a function of the latter occurring edge of $\overline{WE}$ or $\overline{CE}$.
5. t_{DH} and t_{DS} are measured from the earlier of $\overline{CE}$ or $\overline{WE}$ going high.

Table 7. Phantom Clock AC Characteristics (M48T251V)

Symbol		Parameter(1)	Min	Typ	Max	Unit
t_{AVAV}	t_{RC}	READ Cycle Time	85			ns
t_{ELQV}	t_{CO}	$\overline{CE}$ Access Time			85	ns
t_{GLQV}	t_{OE}	$\overline{OE}$ Access Time			85	ns
t_{ELQX}	t_{COE}	$\overline{CE}$ to Output Low Z	5			ns
t_{GLQX}	t_{OEE}	$\overline{OE}$ to Output Low Z	5			ns
t_{EHQZ}	t_{OD}(2)	$\overline{CE}$ to Output High Z			30	ns
t_{GHQZ}	t_{ODO}(2)	$\overline{OE}$ to Output High Z			30	ns
	t_{RR}	READ Recovery	20			ns
t_{AVAV}	t_{WC}	WRITE Cycle Time	85			ns
t_{WLWH}	t_{WP}(3)	WRITE Pulse Width	60			ns
t_{EHAX}	t_{WR}(4)	WRITE Recovery	20			ns
t_{DVEH}	t_{DS}(5)	Data Setup Time	35			ns
t_{WHDX}	t_{DH1}(5)	Data Hold Time from $\overline{WE}$	0			ns
t_{EHDX}	t_{DH2}(5)	Data Hold Time from $\overline{CE}$	0			ns
t_{ELEH}	t_{CW}	$\overline{CE}$ Pulse Width	65			ns
	t_{RST}	$\overline{RST}$ Pulse Width	85			ns

Note: 1. Valid for Ambient Operating Temperature: T_A = 0 to 70°C; V_{CC} = 4.5 to 5.5V or 3.0 to 3.6V (except where noted).
2. These parameters are sampled with a 5 pF load and are not 100% tested.
3. t_{WP} is specified as the logical AND of $\overline{CE}$ and $\overline{WE}$. t_{WP} is measured from the latter of $\overline{CE}$ or $\overline{WE}$ going low to the earlier of $\overline{CE}$ or $\overline{WE}$ going high.
4. t_{WR} is a function of the latter occurring edge of $\overline{WE}$ or $\overline{CE}$.
5. t_{DH} and t_{DS} are measured from the earlier of $\overline{CE}$ or $\overline{WE}$ going high.

MAXIMUM RATING

Stressing the device above the rating listed in the "Absolute Maximum Ratings" table may cause permanent damage to the device. These are stress ratings only and operation of the device at these or any other conditions above those indicated in the Operating sections of this specification is not implied. Exposure to Absolute Maximum Rating conditions for extended periods may affect device reliability. Refer also to the STMicroelectronics SURE Program and other relevant quality documents.

Table 8. Absolute Maximum Ratings

Symbol	Parameter		Value	Unit
T_A	Operating Temperature		0 to 70	°C
T_{STG}	Storage Temperature (V_{CC}, Oscillator Off)		–40 to 85	°C
T_{SLD}(1)	Lead Solder Temperature for 10 seconds		260	°C
V_{CC}	Supply Voltage (on any pin relative to Ground)	M48T251Y	–0.3 to +7.0	V
		M48T251V	–0.3 to +4.6	V
V_{IO}	Input or Output Voltages		–0.3 to V_{CC} + 0.3	V
I_O	Output Current		20	mA
P_D	Power Dissipation		1	W

Note: 1. Soldering temperature not to exceed 260°C for 10 seconds (total thermal budget not to exceed 150°C for longer than 30 seconds). No preheat above 150°C, or direct exposure to IR reflow (or IR preheat) allowed, to avoid damaging the Lithium battery.

CAUTION! *Negative undershoots below -0.3V are not allowed on any pin while in the Battery Back-up Mode.*

DC AND AC PARAMETERS

This section summarizes the operating and measurement conditions, as well as the DC and AC characteristics of the device. The parameters in the following DC and AC Characteristic tables are derived from tests performed under the Measurement Conditions listed in the relevant tables. Designers should check that the operating conditions in their projects match the measurement conditions when using the quoted parameters.

Table 9. DC and AC Measurement Conditions

Parameter	M48T251Y	M48T251V
V_{CC} Supply Voltage	4.5 to 5.5V	3.0 to 3.6V
Ambient Operating Temperature	0 to 70°C	0 to 70°C
Load Capacitance (C_L)	100pF	50pF
Input Rise and Fall Times	≤ 5ns	≤ 5ns
Input Pulse Voltages	0 to 3V	0 to 3V
Input and Output Timing Ref. Voltages	1.5V	1.5V

Note: Output High Z is defined as the point where data is no longer driven (see Table 9., page 18).

Figure 12. AC Testing Load Circuit

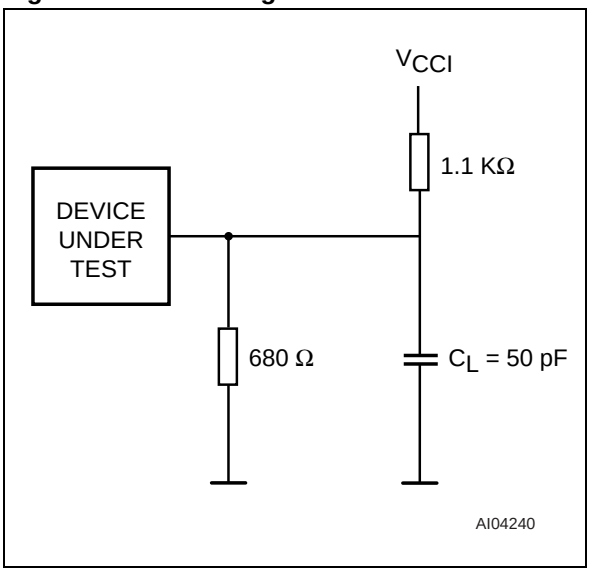

Note: 50pF for M48T251V.

Table 10. Capacitance

Symbol	Parameter(1,2)	Min	Max	Unit
C_{IN}	Input Capacitance		10	pF
C_{IO}(3)	Input / Output Capacitance		10	pF

Note: 1. Effective capacitance measured with power supply at 5V. Sampled only; not 100% tested.
2. At 25°C, f = 1MHz.
3. Outputs were deselected.

Table 11. DC Characteristics

Sym	Parameter(1)	Test Condition	M48T251Y			M48T251V			Unit
			–70			–85			
			Min	Typ	Max	Min	Typ	Max	
I_{LI}(2)	Input Leakage Current	$0V \le V_{IN} \le V_{CC}$			±1			±1	µA
I_{LO}	Output Leakage Current	$0V \le V_{OUT} \le V_{CC}$			±1			±1	µA
I_{CC1}	Supply Current				85			50	mA
I_{CC2}	Supply Current (TTL Standby)	$\overline{CE} = V_{IH}$		5	10		5	7	mA
I_{CC3}	V_{CC} Power Supply Current	$\overline{CE} = V_{CCI} – 0.2$		3	5		2	3	mA
V_{IL}(3)	Input Low Voltage		–0.3		0.8	–0.3		0.6	V
V_{IH}(3)	Input High Voltage		2.2		V_{CC} + 0.3	2.2		V_{CC} + 0.3	V
V_{OL}	Output Low Voltage	I_{OL} = 2.0 mA			0.4			0.4	V
V_{OH}	Output High Voltage	I_{OH} = –1.0 mA	2.4			2.4			V
V_{PFD}(3)	Power Fail Deselect		4.25	4.37	4.50	2.80		2.97	V
V_{SO}(3)	Battery Back-up Switchover			V_{BAT}			2.5		V

Note: 1. Valid for Ambient Operating Temperature: T_A = 0 to 70°C; V_{CC} = 4.5 to 5.5V or 3.0 to 3.6V (except where noted).
2. $\overline{RST}$ (Pin 1) has an internal pull-up resistor.
3. All voltages are referenced to Ground.

Figure 13. Power Down/Up Mode AC Waveforms

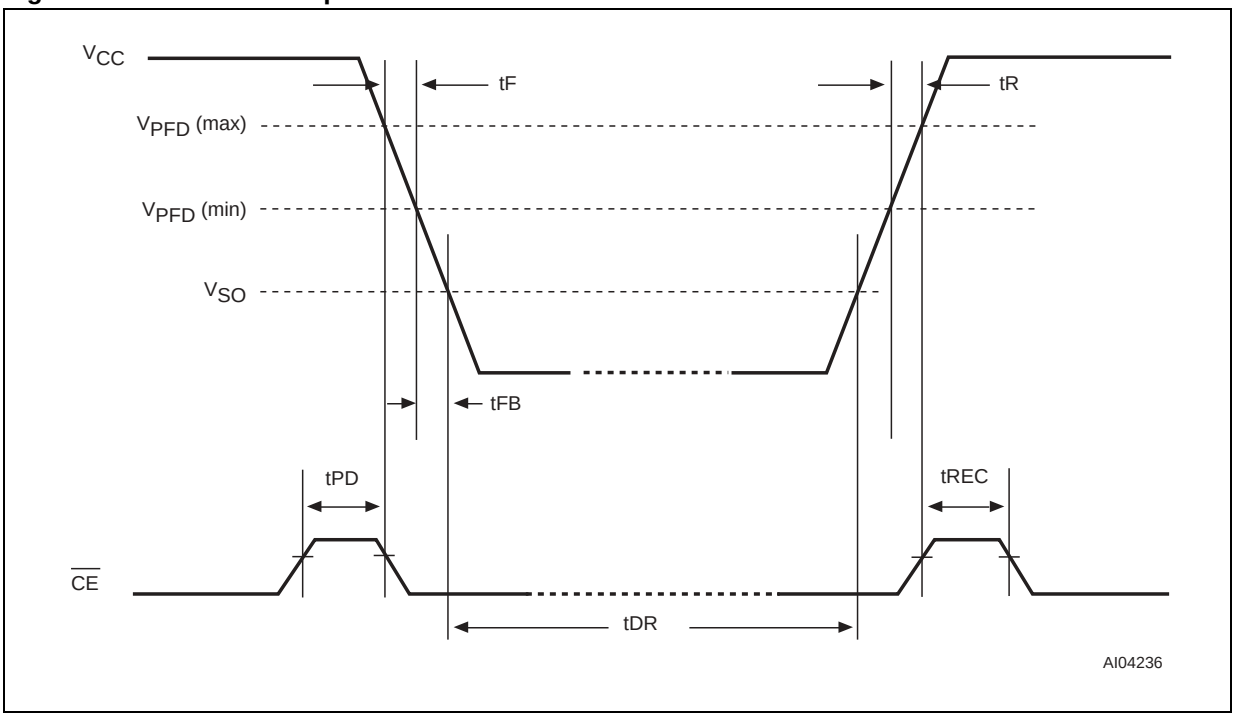

Table 12. Power Down/Up Trip Points DC Characteristics

Symbol	Parameter(1)	Min	Max	Unit
t_{REC}	V_{PFD} (max) to $\overline{CE}$ low	1.5	2.5	ms
t_F	V_{PFD} (max) to V_{PFD} (min) V_{CC} Fall Time	300		µs
t_{FB}	V_{PFD} (min) to V_{SO} V_{CC} Fall Time	10		µs
t_R	V_{PFD} (min) to V_{PFD} (max) V_{CC} Rise Time	0		µs
t_{PD}	$\overline{CE}$ High to Power-Fail	0		µs
t_{DR}(2)	Expected Data Retention Time	10		Years

Note: 1. Valid for Ambient Operating Temperature: T_A = 0 to 70°C; V_{CC} = 4.5 to 5.5V or 3.0 to 3.6V (except where noted).
2. At 25°C, V_{CC} = 0V; the expected t_{DR} is defined as cumulative time in the absence of V_{CC} with the clock oscillator running.

PACKAGE MECHANICAL INFORMATION

Figure 14. PMDIP32 – 32-pin Plastic Module DIP, Package Outline

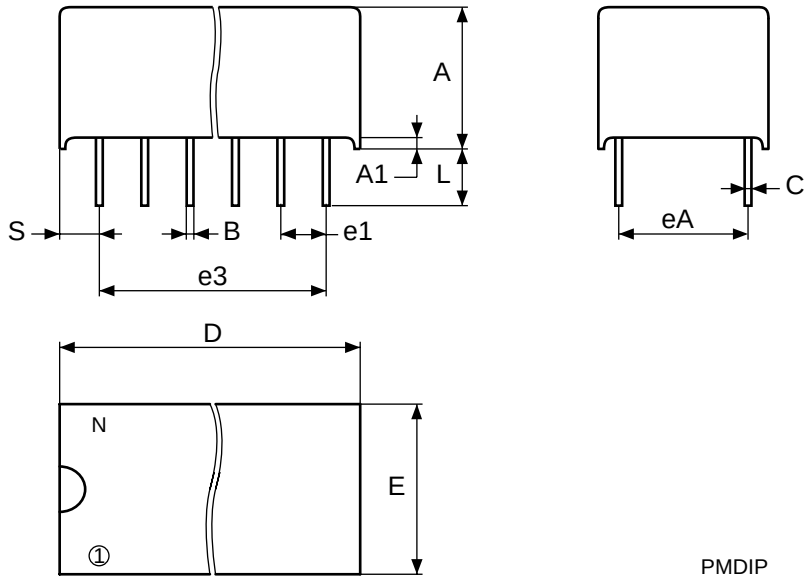

Note: Drawing is not to scale.

Table 13. PMDIP32 – 32-pin Plastic Module DIP, Package Mechanical Data

Symb	mm			inches		
	Typ	Min	Max	Typ	Min	Max
A		9.27	9.52		0.365	0.375
A1		0.38	–		0.015	–
B		0.43	0.59		0.017	0.023
C		0.20	0.33		0.008	0.013
D		42.42	43.18		1.670	1.700
E		18.03	18.80		0.710	0.740
e1		2.29	2.79		0.090	0.110
e3		34.29	41.91		1.350	1.650
eA		14.99	16.00		0.590	0.630
L		3.05	3.81		0.120	0.150
S		1.91	2.79		0.075	0.110
N	32			32		

PART NUMBERING

Table 14. Ordering Information Example

Example: M48T 251Y –70 PM 1 TR

Device Type

M48T

Supply Voltage and Write Protect Voltage

251Y = V_{CC} = 4.5 to 5.5V; V_{PFD} = 4.25 to 4.50V

251V = V_{CC} = 3.0 to 3.6V; V_{PFD} = 2.80 to 2.97V

Speed

–70 = 70ns (M48T251Y)

–85 = 85ns (M48T251V)

Package

PM = PMDIP32

Temperature Range

1 = 0 to 70°C

Shipping Method for SOIC

blank = Tubes

TR = Tape & Reel

For other options, or for more information on any aspect of this device, please contact the ST Sales Office nearest you.

REVISION HISTORY

Table 15. Document Revision History

Date	Version	Revision Details
June 2001	1.0	First Issue
20-May-02	1.1	Add countries to disclaimer
28-Mar-03	2.0	v2.2 template applied; test condition updated (Table 12)
22-Feb-05	3.0	Reformatted; IR reflow update (Table 8)