查询W83L785R供应商 捷多邦，专业PCB打样工厂，24小时加急出货

W83L785R

Winbond Electronics Corp.

WINBOND H/W MONITORING IC FOR NOTEBOOK

1. GENERAL DESCRIPTION

W83L785R is a condensed product of W83L785R --- Winbond's most popular hardware monitoring IC for notebook. Specifically designed for the graphic cards and notebook systems, W83L785R can be used to monitor several critical hardware parameters of the system, including voltages, fan speeds, and temperatures, which are very important for the system to work stably and properly.

An 8-bit analog-to-digital converter (ADC) was built inside W83L785R. The W83L785R can monitor 4 analog voltage inputs, 2 fan tachometer inputs, 2 remote temperature sensors. The remote temperature sensing can be performed by thermistors, or 2N3904 NPN-type transistors, or connected from Intel™ Deschutes CPU thermal diode output. The W83L785R provides 2 PWM (pulse width modulation) outputs for the fan speed control. Also the W83L785R provides: SMI#, OVT#, Temp fault, GPIO signals for system protection events; I^2C™ serial bus interface. W83L785R also provides 4 pure GPIO and 7 multifunctional GPIO pins, and powered by 3.3V.

Through the application software or BIOS, the users can read all the monitored parameters of system from time to time. And a pop-up warning can be also activated when the monitored item was out of the proper/preset range. The application software could be Winbond's Hardware Doctor™, or Intel™ LDCM (LanDesk Client Management), or other management application software. Also the users can set up the upper and lower limits (alarm thresholds) of these monitored parameters and to activate one programmable and maskable interrupts. For the spacing saving consideration of the Notebook system, W83L785R is in the package of 209mil 20pins-SSOP.

找PDF 维库一下 pdf.dzsc.com

2. FEATURES

2.1 Monitoring Items

- 2 thermal inputs from remote thermistors or 2N3904 NPN-type transistors or Pentium™ II (Deschutes) thermal diode output
- 4 voltage inputs
  --- typical for Vcore, +3.3V (Power), +2.5V, +1.5V
- 2 sets of PWM fan speed control
- WATCHDOG comparison of all monitored values
- Programmable hysteresis and setting points (alarm thresholds) for all monitored items

2.2 Actions Enabling

- 2 PWM (pulse width modulation) outputs for fan speed control

--- Total up to 2 sets of fan speed monitoring and controlling

- Issue temperature fault signal as the temperature of the system/CPU exceeds its limit.
- Issue SMI#, OVT#, GPIO and Temp. Fault signals to activate system protection
- Warning signal pop-up in application software

2.3 General

- I^2C™ serial bus interface
- Intel™ LDCM (DMI driver 2.0) support
- Winbond hardware monitoring application software (Hardware Doctor™) support, for both Windows 95/98 and Windows NT 4.0/5.0
- Meet WfM 2.0 (Wired for Management) spec.
- 3.3V VCC operation

2.4 Package

- 20-pin SSOP (209mil)

3. KEY SPECIFICATIONS

- Voltage monitoring accuracy ±1% (Max)
- Monitoring Temperature Range and Accuracy
  - 40°C to +120°C ± 3°C(Max)
- Supply Voltage 2.7V ~ 5.5V
- Operating Supply Current 2 mA typ.
- Power Down Supply Current 20 uA typ.
- ADC Resolution 8 Bits

4. PIN CONFIGURATION

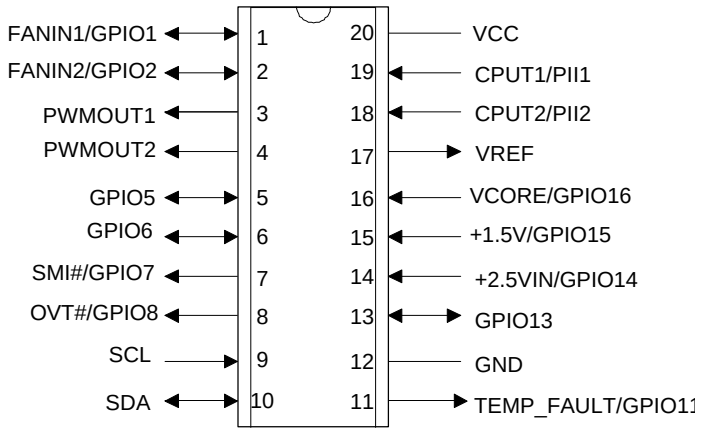

5. PIN DESCRIPTION

I/O_{12t} - TTL level bi-directional pin with 12 mA source-sink capability,open drain output

I/O_{12ts} - TTL level and schmitt trigger

OUT_{12} - Output pin with 12 mA source-sink capability

AOUT - Output pin(Analog)

OD_{12} - Open-drain output pin with 12 mA sink capability

IN_t - TTL level input pin

IN_{ts} - TTL level input pin and schmitt trigger

AIN - Input pin(Analog)

PIN NAME	PIN NO.	TYPE	DESCRIPTION
FANIN1 / GPIO1	1	IN_{ts} / I/OD_{12ts}	0V to +3.3V amplitude fan tachometer input.(Default) / General purpose I/O function. This multi-functional pin is programmable.
FANIN2 / GPIO2	2	IN_{ts} / OUT_{12}	0V to +3.3V amplitude fan tachometer input. (Default) / General purpose I/O function. This multi-functional pin is programmable.
PWMOUT1	3	OD_{12}	Fan speed control PWM output. This pin is open-drain
PWMOUT2	4	OD_{12}	Fan speed control PWM output. This pin is open-drain
GPIO5	5	I/OD_{12ts}	General purpose I/O function.
GPIO6	6	I/OD_{12ts}	General purpose I/O function.
SMI#/ GPIO7	7	OD_{12} I/OD_{12ts}	System Management Interrupt. General purpose I/O function. This multi-functional pin is programmable.
OVT#/ GPIO8	8	OD_{12} I/OD_{12ts}	Over temperature Shutdown Output. General purpose I/O function. This multi-functional pin is programmable.
SCL	9	IN_{ts}	Serial Bus Clock.
SDA	10	I/OD_{12}	Serial Bus bi-directional Data.
TEMP_FAULT GPIO11	11	OD_{12} I/OD_{12ts}	Active-Low output. This pin will be a logic LOW when the temperature of the system or CPU exceeds its limit. (Default) / General purpose I/O function. This multi-functional pin is programmable.
GND	12	Ground	Ground.

Pin Discription, continued

PIN NAME	PIN NO.	TYPE	DESCRIPTION
GPIO13	13	I/OD_{12ts}	General purpose I/O function. Default Open drain.
+2.5V/ GPIO14	14	AIN I/OD_{12ts}	0V to 2.048V FSR Analog Inputs. (This pin is connected to the +2.5V). General purpose I/O function. This multi-functional pin is programmable.
+1.5V/ GPIO15	15	AIN I/OD_{12ts}	0V to 2.048V FSR Analog Inputs. (This pin is connected to the +1.5V). General purpose I/O function. This multi-functional pin is programmable.
VCORE/ GPIO16	16	AIN I/OD_{12ts}	0V to 2.048V FSR Analog Inputs. (This pin connected to VCORE) General purpose I/O function. This multi-functional pin is programmable.
VREF	17	AOUT	Reference Voltage.
CPUT2 / PII2	18	AIN	Thermistor terminal input.(Default) / Pentium™ II diode input. This multi-functional pin is programmable.
CPUT1 / PII1	19	AIN	Thermistor terminal input.(Default) / Pentium™ II diode input. This multi-functional pin is programmable.
VCC	20	POWER	+3.3 VCC power supply input.

6. FUNCTIONAL DESCRIPTION

6.1 General Description

The W83L785R provides most 4 analog positive inputs, 2 fan speed monitors, 2 sets for fan PWM (Pulse Width Modulation) control, 2 remote thermal inputs from remote thermistors or 2N3904 transistors or Pentium™ II (Deschutes) thermal diode outputs. W83L785R also provides software power down this chip to save power, but I2C interface is still working. When W83L785 starts the monitor function on the chip, the Watch Dog machine monitor every function and store the value to registers. If the monitor value exceeds the limit value, the interrupt status will be set to 1.

6.2 Access Interface

The W83L785R provides I^2C Serial Bus to read/write internal registers. In the W83L785R, the I2C address defined value is 0101101.

6.2.1 The first serial bus access timing are shown as follow:

(a) Serial bus write to internal address register followed by the data byte

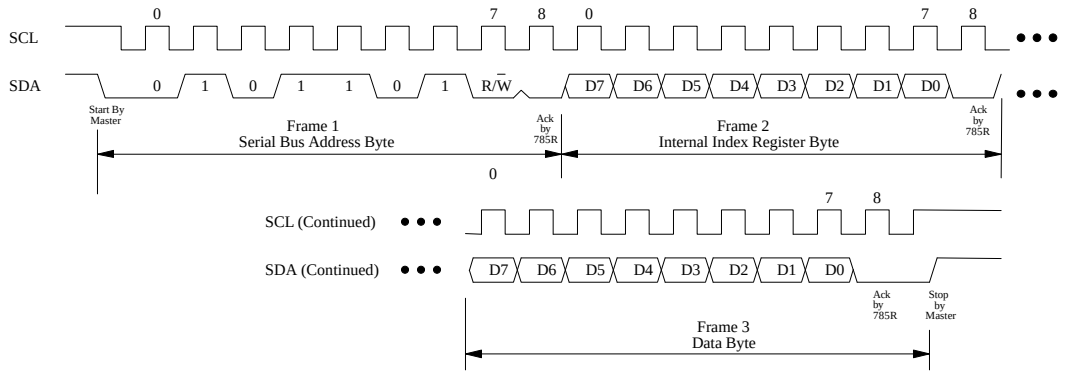

Figure 1. Serial Bus Write to Internal Address Register followed by the Data Byte

(b) Serial bus read form internal address register followed by the data byte

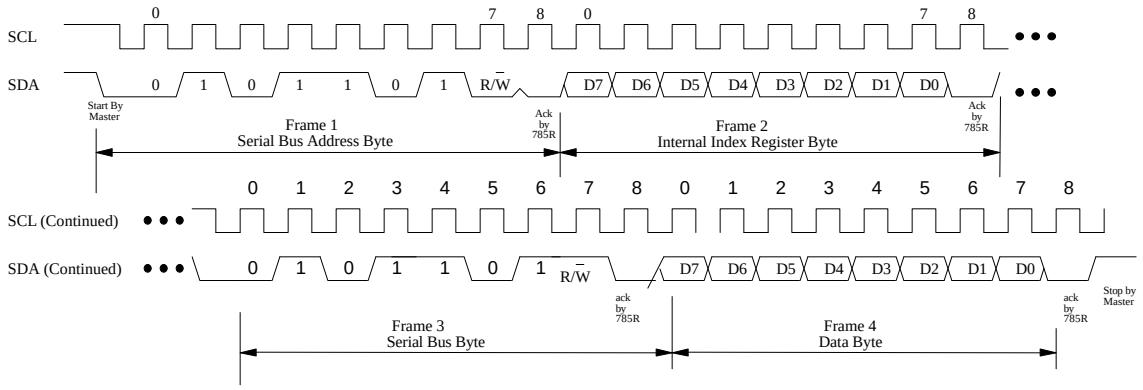

Figure 2. Serial Bus read from Internal Address Register followed by the Data Byte

6.3 Analog Inputs

The maximum input voltage of the analog pin is 2.048V because the 8-bit ADC has the 8mv LSB. Actually, the application of the voltage monitoring would most often be connected to power suppliers. The +1.5V voltage can directly connected to these analog inputs. The +2.5V and CPU VOCRE, the inputs higher than 2.048V, should be reduced a factor with external resistors so as to obtain the input range. As Figure 3 shows.

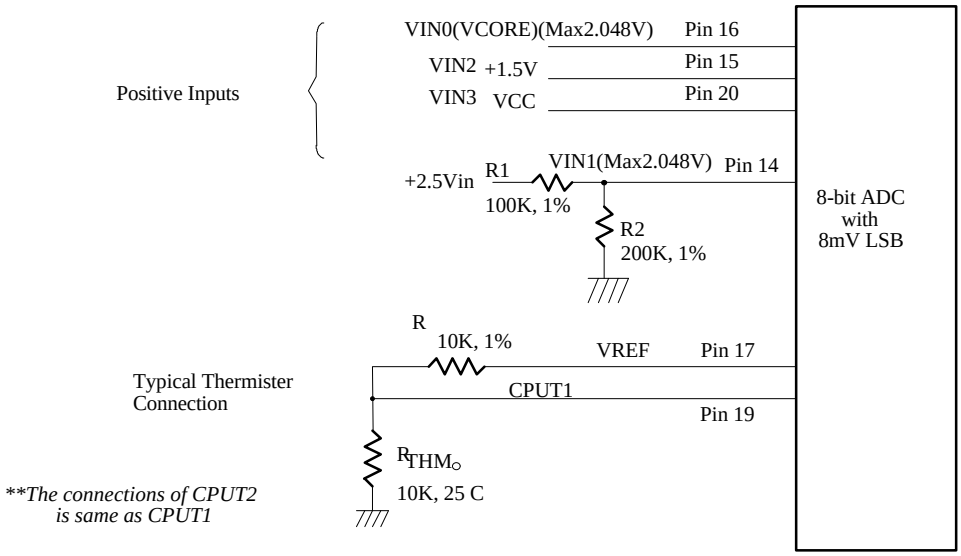

Figure. 3.

6.3.1 Voltage Monitor input can not be over 2.048V :

The input voltage VIN1 or Vcore can be expressed as following equation:

$$VIN1 = V_{+2.5V} \times \frac{R_2}{R_1 + R_2}$$. $V_{+2.5V}$ is +2.5V inputs.

The value of R1 and R2 can be selected to 100K Ohms and 200K Ohms, respectively, when the input voltage is 2.5V. The node voltage of VIN3 can be subject to less than 2.048V for the maximum input range of the 8-bit ADC. The pin 20 is connected to the power supply VCC with +3.3V. There are two functions in this pin with 3.3V. The first function is to supply internal analog power of the W83L785R and the second function is that this voltage with 3.3V is connected to internal serial resistors to monitor the +3.3V voltage. The value of two serial resistors are 20K ohms and 40K ohms so that input voltage to ADC is 1.1V which is less than 2.048V of ADC maximum input voltage. The express equation can represent as follows.

$$V_{in} = VCC \times \frac{20K\Omega}{20K\Omega + 40K\Omega} \cong 1.1V$$

where VCC is set to 3.3V.

6.4 Temperature Measurement Machine

The temperature data format is 8-bit two-complement for thermal sensor. The 8-bit temperature data can be obtained by reading the CR[26h] or CR[27h]. The format of the temperature data is show in Table 1.

Temperature	8-Bit Digital Output	
	8-Bit Binary	8-Bit Hex
+125°C	0111,1101	7Dh
+25°C	0001,1001	19h
+2°C	0000,0010	02h
+1°C	0000,0001	01h
+0°C	0000,0000	00h
-1°C	1111,1111	FFh
-2°C	1111,1110	FEh
-25°C	1110,0111	E7h
-55°C	1100,1001	C9h

Table 1.

6.4.1 Monitor temperature from thermistor:

The W83L785R can connect two thermistors to measure three different environment temperature or remote temperature. The specification of thermistor should be considered to (1) β value is 3435K, (2) resistor value is 10K ohms at 25°C. In the Figure 3, the themistor is connected by a serial resistor with 10K Ohms, then connect to VREF (pin 17).

6.4.2 Monitor temperature from Pentium II™ thermal diode or bipolar transistor 2N3904

The W83L785R can alternate the thermistor to Pentium II™ (Deschutes) thermal diode interface or transistor 2N3904 and the circuit connection is shown as Figure 4. The pin of Pentium II™ D- is connected to power supply ground (GND) and the pin D+ is connected to pin PIIx in the W83L785R. The resistor R=15K ohms should be connected to VREF to supply the diode bias current and the

bypass capacitor C=3300pF should be added to filter the high frequency noise. The transistor 2N3904 should be connected to a form with a diode, that is, the Base (B) and Collector (C) in the 2N3904 should be tied together to act as a thermal diode.

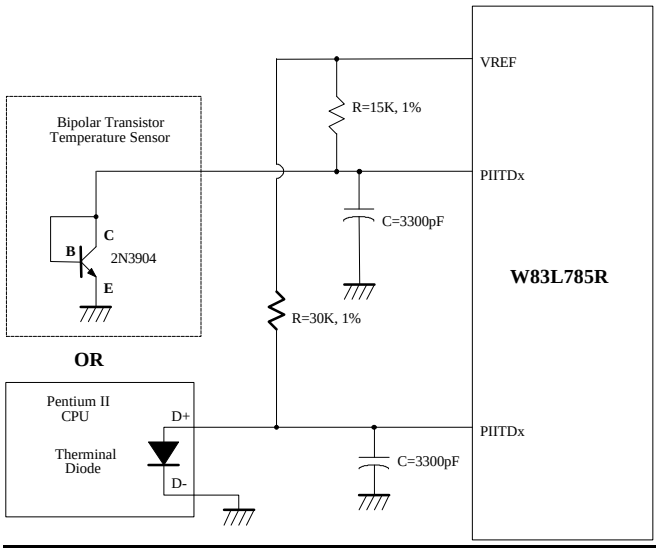

Figure 4.

6.4.3 Over Temperature signal (OVT#)

W83L785R provides two external thermal sensors to detect temperature. When detected temperature exceeds the over-temperature value, pin OVT# will be asserted until the temperature goes below the hysteresis temperature. Pin OVT# has 2 operating modes:

6.4.3.1 Comparator Mode :

At this mode, temperature exceeding T_O causes the OVT# output activated until the temperature is less than T_{HYST}. (Figure 5)

6.4.3.2 Interrupt Mode:

At this mode, temperature exceeding T_O causes the OVT# output activated indefinitely until reset by reading interrupt status register. Temperature exceeding T_O , then OVT# asserted, and then temperature going below T_{HYST} will also cause the OVT# activated indefinitely until reset by reading temperature sensor1 or sensor2 registers. Once the OVT# is activated by exceeding T_O , then reset, if the temperature remains above T_{HYST} , the OVT# will not be activated again.(Figure 5)

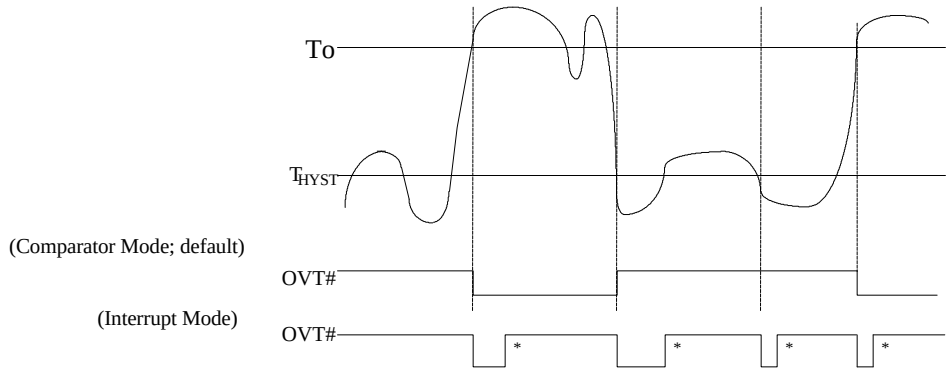

*Interrupt Reset when Interrupt Status Register is read

Figure 5.

6.4.4 Temperature Fault (Temp_fault #)

W83L785R provides a good protection for temperature. Set pin11(TEMP_FAULT#) to monitor temperature and enable TEMP_FAULT# function. When VTIN1(Pin19) or VTIN(Pin18) temperature exceeds Temperature fault limit in CR53,or R54 pin11 TEMP_FAULT# will be asserted(Figure 6).

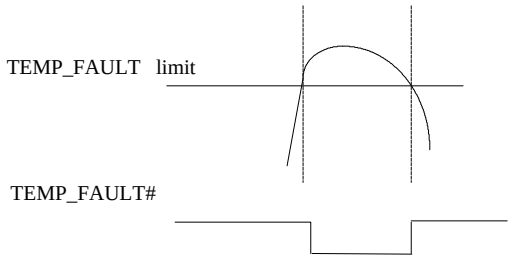

Figure 6. TEMP_FAULT

6.5 FAN Speed Count and FAN Speed Control

6.5.1 Fan speed count

Inputs are provided by the signals from fans equipped with tachometer outputs. The level of these signals should be set to TTL level, and maximum input voltage cannot be over VCC. If the input signals from the tachometer outputs are over the VCC, the external trimming circuit should be added to reduce the voltage to obtain the input specification. The normal circuit and trimming circuits are shown as Figure 7.

Determine the fan counter according to:

$$Count = \frac{1.35 \times 10^6}{RPM \times Divisor}$$

In other words, the fan speed counter has been read from register CR28 or CR29, the fan speed can be evaluated by the following equation.

$$RPM = \frac{1.35 \times 10^6}{Count \times Divisor}$$

The default divisor is 2 and defined at CR47.bit0~2, bit4~6 which are three bits for divisor. That provides very low speed fan counter such as power supply fan. The followed table is an example for the relation of divisor, RPM, and count.

Divisor	Nominal RPM	Time per Revolution	Counts	70% RPM	Time for 70%
1	8800	6.82 ms	*153*	6160	9.74 ms
2 (default)	4400	13.64 ms	*153*	3080	19.48 ms
4	2200	27.27 ms	*153*	1540	38.96 ms
8	1100	54.54 ms	*153*	770	77.92 ms
16	550	109.08 ms	*153*	385	155.84 ms
32	275	218.16 ms	*153*	192	311.68 ms
64	137	436.32 ms	*153*	96	623.36 ms
128	68	872.64 ms	*153*	48	1246.72 ms

Table 2.

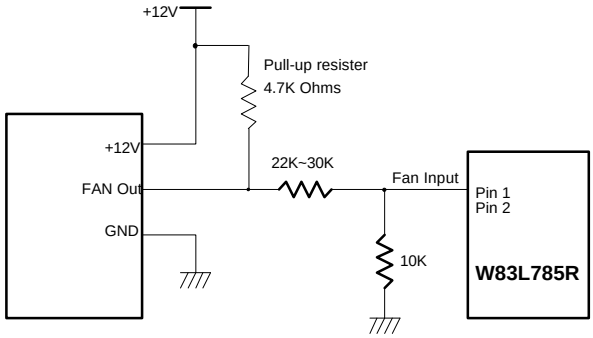

Figure 7-1. Fan with Tach Pull-Up to +12V, or Totern-Pole Output and Register Attenuator

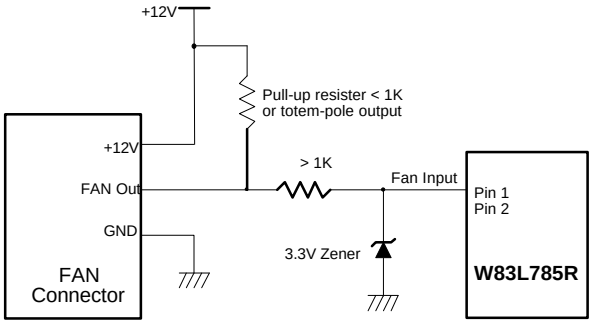

Figure 7-2. Fan with Tach Pull-Up to +12V, or Totem-Pole Putput and Zener Clamp

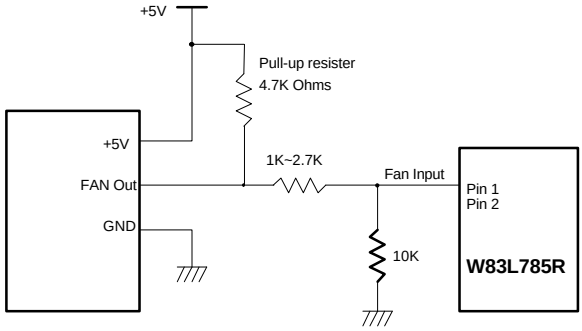

Figure 7-3. Fan with Tach Pull-Up to +5V, or Totern-Pole Output and Register Attenuator

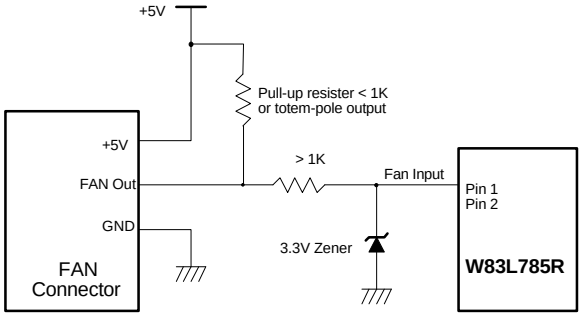

Figure 7-4. Fan with Tach Pull-Up to +5V, or Totem-Pole Putput and Zener Clamp

6.5.2 Fan speed control

The W83L785R provides four sets for fan PWM speed control. The duty cycle of PWM can be programmed by a 8-bit register which are defined in the CR81h and CR83h. The default duty cycle is set to 100%, that is, the default 8-bit registers is set to FFh. The expression of duty can be represented as follows.

$$\text{Duty} - \text{cycle}(\%) = \frac{\text{Programmed 8 - bit Register Value}}{255} \times 100\%$$

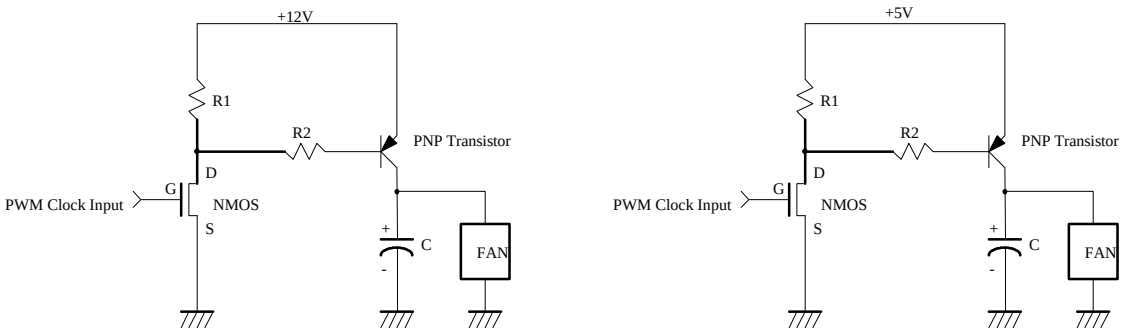

Figure 8.

6.6 SMI#

6.6.1 Temperature

Pin SMI# for temperature has 3 modes.

6.6.1.1 Comparator Interrupt Mode

Temperature exceeding T_O causes an interrupt and this interrupt will be reset when reading all of the Interrupt Status Registers. Once an interrupt event has occurred by exceeding T_O, then reset, if the temperature remains above the T_{HYST}, the interrupt will occur again when the next conversion has completed. If an interrupt event has occurred by exceeding T_O and not reset, the interrupts will not occur again. The interrupts will continue to occur in this manner until the temperature goes below T_{HYST}. (Figure 9-1)

6.6.1.2 Two-Times Interrupt Mode

Temperature exceeding T_O causes an interrupt and then temperature going below T_{HYST} will also cause an interrupt if the previous interrupt has been reset by reading all the interrupt Status Register. Once an interrupt event has occurred by exceeding T_O , then reset, if the temperature remains above the T_{HYST} , the interrupt will not occur. (Figure 9-2)

6.6.1.3 One-Time Interrupt Mode

Temperature exceeding T_O causes an interrupt and then temperature going below T_{HYST} will not cause an interrupt. Once an interrupt event has occurred by exceeding T_O, then going below $T_{HYST,}$ an interrupt will not occur again until the temperature exceeding T_O. (Figure 9-3)

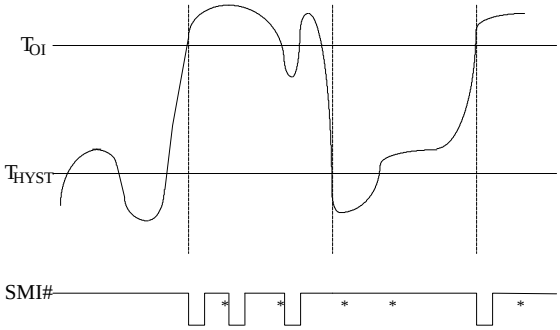

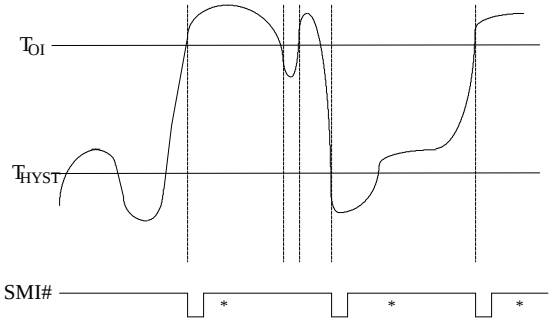

*Interrupt Reset when Interrupt Status Registers are read

Figure 9-1. Comparator Interrupt Mode

Figure 9-2. Two-Times Interrupt Mode

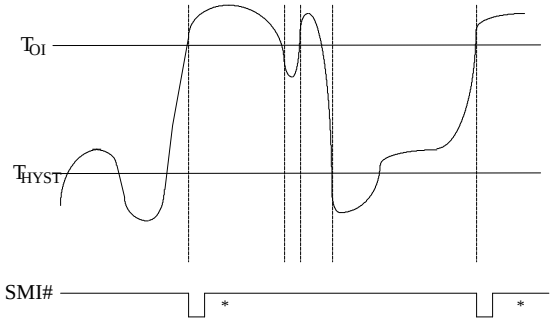

*Interrupt Reset when Interrupt Status Registers are read

Figure 9-3. One-Time Interrupt Mode

6.6.2 Voltage

SMI# interrupt for voltage is Two-Times Interrupt Mode. Voltage exceeding high limit or going below low limit will causes an interrupt if the previous interrupt has been reset by reading all the interrupt Status Register. (Figure 10-1)

6.6.3 Fan

SMI# interrupt for fan is Two-Times Interrupt Mode. Fan count exceeding the limit, or exceeding and then going below the limit (set at value ram index 3Bh and 3Ch), will causes an interrupt if the previous interrupt has been reset by reading all the interrupt Status Register. (Figure 10-2)

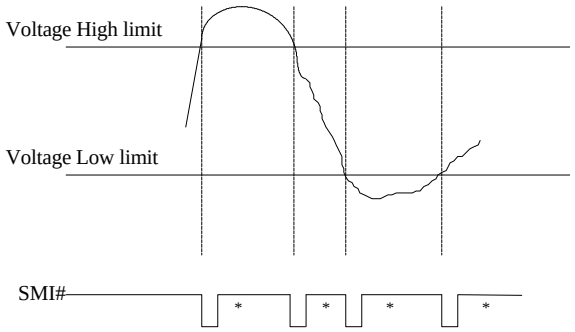

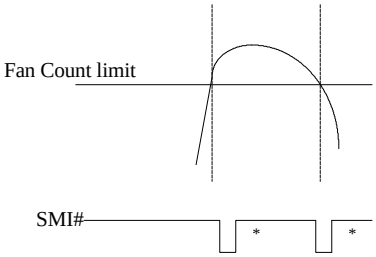

*Interrupt Reset when Interrupt Status Registers are read

Figure 10-1. Voltage SMI# Mode

Figure 10-2. Fan SMI# Mode

7. SPECIFICATIONS

7.1 Absolute Maximum Ratings

PARAMETER	RATING	UNIT
Power Supply Voltage	-0.5 to 7.0	V
Input Voltage	-0.5 to V_{CC}+0.5	V
Operating Temperature	0 to +70	° C
Storage Temperature	-55 to +150	° C

Note: Exposure to conditions beyond those listed under Absolute Maximum Ratings may adversely affect the life and reliability of the device.

7.2 DC Characteristics

(Ta = 0° C to 70° C, V_{DD} = 5V ± 10%, V_{SS} = 0V)

PARAMETER	SYM.	MIN.	TYP.	MAX.	UNIT	CONDITIONS
I/O_{12t} - TTL level bi-directional pin with source-sink capability of 12 mA						
Input Low Voltage	V_{IL}			0.8	V	
Input High Voltage	V_{IH}	2.0			V	
Output Low Voltage	V_{OL}			0.4	V	I_{OL} = 12 mA
Output High Voltage	V_{OH}	2.4			V	I_{OH} = - 12 mA
Input High Leakage	I_{LIH}			+10	μA	V_{IN} = V_{DD}
Input Low Leakage	I_{LIL}			-10	μA	V_{IN} = 0V
I/O_{12ts} - TTL level bi-directional pin with source-sink capability of 12 mA and schmitt-trigger level input						
Input Low Threshold Voltage	V_{t-}	0.5	0.8	1.1	V	V_{DD} = 5 V
Input High Threshold Voltage	V_{t+}	1.6	2.0	2.4	V	V_{DD} = 5 V
Hysteresis	V_{TH}	0.5	1.2		V	V_{DD} = 5 V
Output Low Voltage	V_{OL}			0.4	V	I_{OL} = 12 mA
Output High Voltage	V_{OH}	2.4			V	I_{OH} = - 12 mA
Input High Leakage	I_{LIH}			+10	μA	V_{IN} = V_{DD}
Input Low Leakage	I_{LIL}			-10	μA	V_{IN} = 0V

11.2 DC Characteristics, continued

PARAMETER	SYM.	MIN.	TYP.	MAX.	UNIT	CONDITIONS
OUT_{12t} - TTL level output pin with source-sink capability of 12 mA						
Output Low Voltage	V_{OL}			0.4	V	I_{OL} = 12 mA
Output High Voltage	V_{OH}	2.4			V	I_{OH} = -12 mA
OD_8 - Open-drain output pin with sink capability of 8 mA						
Output Low Voltage	V_{OL}			0.4	V	I_{OL} = 8 mA
OD_{12} - Open-drain output pin with sink capability of 12 mA						
Output Low Voltage	V_{OL}			0.4	V	I_{OL} = 12 mA
OD_{48} - Open-drain output pin with sink capability of 48 mA						
Output Low Voltage	V_{OL}			0.4	V	I_{OL} = 48 mA
IN_t - TTL level input pin						
Input Low Voltage	V_{IL}			0.8	V	
Input High Voltage	V_{IH}	2.0			V	
Input High Leakage	I_{LIH}			+10	μA	V_{IN} = V_{DD}
Input Low Leakage	I_{LIL}			-10	μA	V_{IN} = 0 V
IN_{ts} - TTL level Schmitt-triggered input pin						
Input Low Threshold Voltage	V_{t-}	0.5	0.8	1.1	V	V_{CC} = 5 V
Input High Threshold Voltage	V_{t+}	1.6	2.0	2.4	V	V_{CC} = 5 V
Hysteresis	V_{TH}	0.5	1.2		V	V_{CC} = 5 V
Input High Leakage	I_{LIH}			+10	μA	V_{IN} = V_{CC}
Input Low Leakage	I_{LIL}			-10	μA	V_{IN} = 0 V

7.3 AC Characteristics

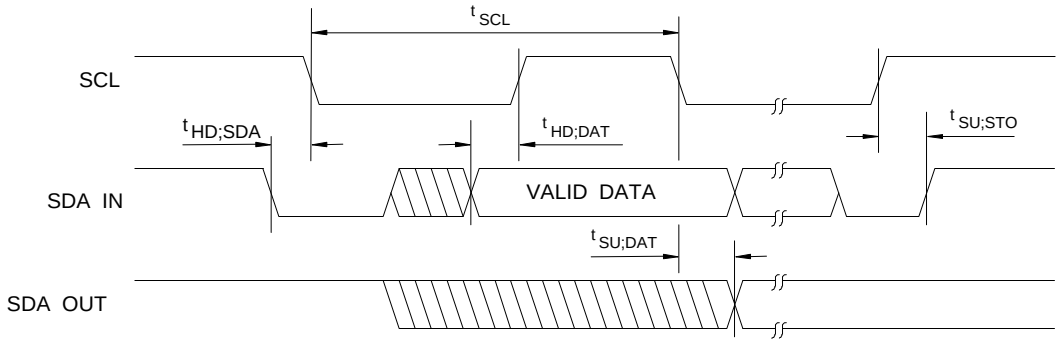

Serial Bus Timing Diagram

Serial Bus Timing

PARAMETER	SYMBOL	MIN.	MAX.	UNIT
SCL clock period	t^{-}_{SCL}	10		uS
Start condition hold time	$t_{HD;SDA}$	4.7		uS
Stop condition setup-up time	$t_{SU;STO}$	4.7		uS
DATA to SCL setup time	$t_{SU;DAT}$	120		nS
DATA to SCL hold time	$t_{HD;DAT}$	5		nS
SCL and SDA rise time	t_R		1.0	uS
SCL and SDA fall time	t_F		300	nS

8. HOW TO READ THE TOP MARKING

The top marking of W83L785R

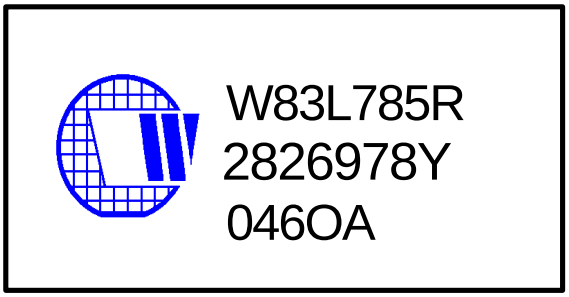

Left: Winbond logo

1st line: Type number W83L785R, R means SSOP (Thickness = 209mil).

2nd line: Tracking code 2 826978Y

2: wafers manufactured in Winbond FAB 2

826978Y: wafer production series lot number

3rd line: Tracking code 046 A A

046: packages made in 2000, week 46

O: assembly house ID; A means ASE, O means OSE, G means Greatek

A: IC revision; A means version A, B means version B

9. PACKAGE DRAWING AND DIMENSIONS

20 SSOP-209 mil

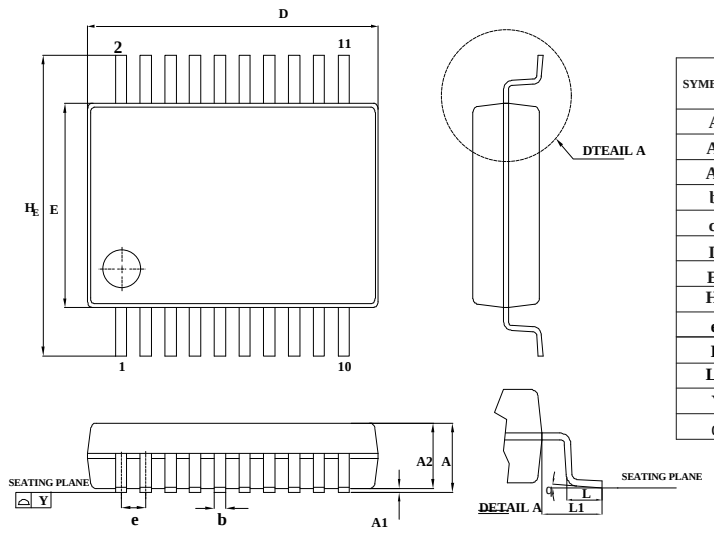

SYMBOL	DIMENSION IN MM			DIMENSION IN INCH		
	MIN.	NOM	MAX.	MIN.	NOM	MAX.
A	—	—	2.00	—	—	0.079
A1	0.05	—	—	0.002	—	—
A2	1.65	1.75	1.85	0.065	0.069	0.073
b	0.22	—	0.38	0.009	—	0.015
c	0.09	—	0.21	0.004	—	0.008
D	10.05	10.20	10.35	0.395	0.401	0.407
E	5.00	5.30	5.60	0.197	0.209	0.220
H_E	7.40	7.80	8.20	0.291	0.307	0.323
e	—	0.65	—	—	0.0256	—
L	0.55	0.75	0.95	0.021	0.030	0.037
L1	—	1.25	—	—	0.050	—
Y	—	—	0.10	—	—	0.004
q	0	—	8	0	—	8

Winbond Electronics Corp.

Headquarters
No. 4, Creation Rd. III
Science-Based Industrial Park
Hsinchu, Taiwan
TEL: 886-35-770066
FAX: 886-35-789467
www: http://www.winbond.com.tw/

Taipei Office
11F, No. 115, Sec. 3, Min-Sheng East Rd.
Taipei, Taiwan
TEL: 886-2-7190505
FAX: 886-2-7197502
TLX: 16485 WINTPE

Winbond Electronics (H.K.) Ltd.
Rm. 803, World Trade Square, Tower II
123 Hoi Bun Rd., Kwun Tong
Kowloon, Hong Kong
TEL: 852-27516023-7
FAX: 852-27552064

Winbond Electronics (North America) Corp.
2730 Orchard Parkway
San Jose, CA 95134 U.S.A.
TEL: 1-408-9436666
FAX: 1-408-9436668

Please note that all data and specifications are subject to change without notice. All the trade marks of products and companies mentioned in this data sheet belong to their respective owners.

These products are not designed for use in life support appliances, devices, or systems where malfunction of these products can reasonably be expected to result in personal injury. Winbond customers using or selling these products for use in such applications do so at their own risk and agree to fully indemnify Winbond for any damages resulting from such improper use or sale.
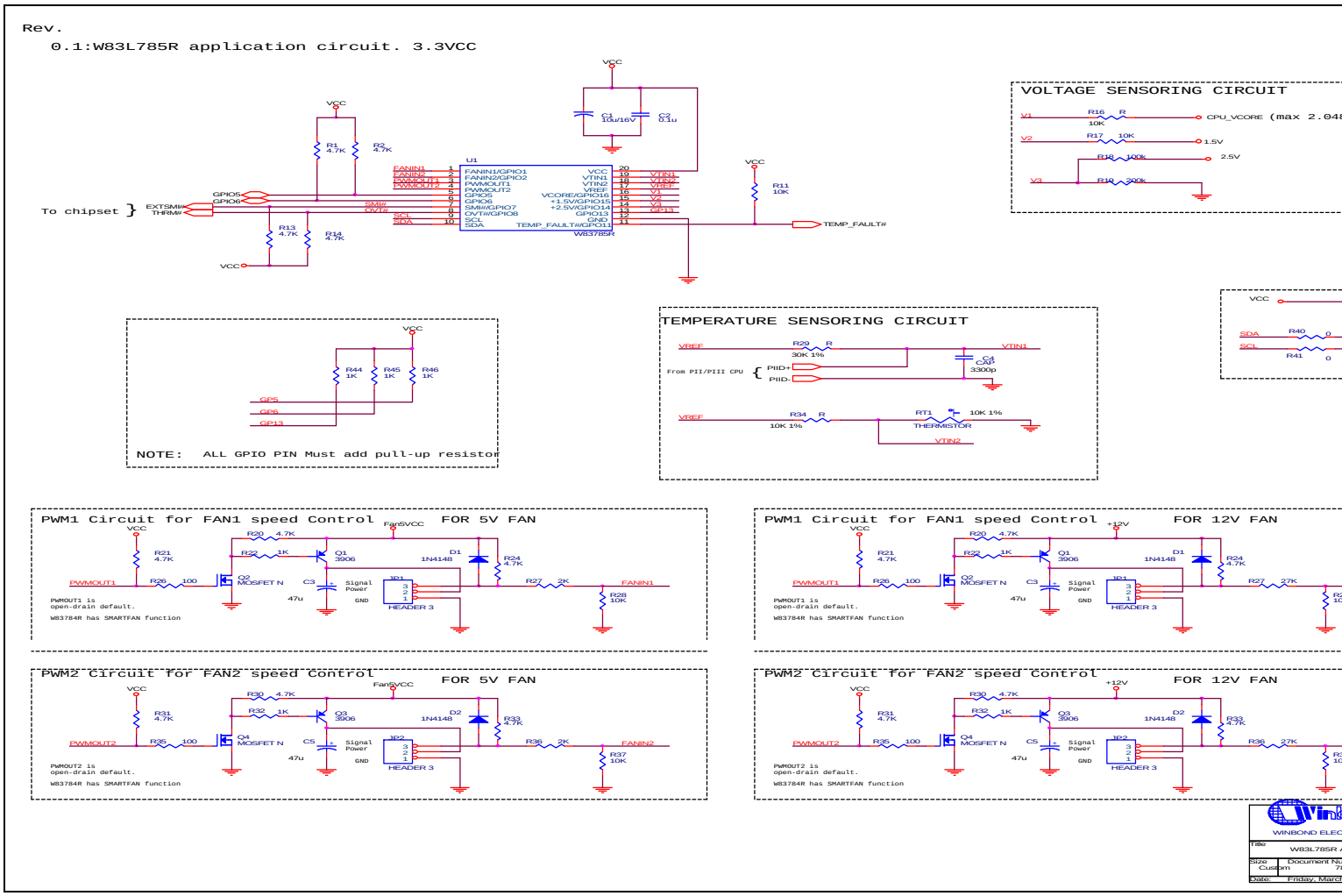
10. W83L785R SCHEMATICS