查询WM9711供应商

WM9711L

Low Power Audio CODEC for Portable Applications

DESCRIPTION

The WM9711L is a highly integrated input / output device designed for mobile computing and communications. The device can connect directly to mono or stereo microphones, stereo headphones and a mono speaker, reducing total component count in the system. Additionally, phone input and output pins are provided for seamless integration with wireless communication devices.

The WM9711L also offers five GPIO pins for interfacing to buttons or other digital devices. To monitor the battery voltage in portable systems, the WM9711L has two uncommitted comparator inputs.

All device functions are accessed and controlled through a single AC-Link interface compliant with the AC'97 standard. Additionally, the WM9711L can generate interrupts to indicate low battery, dead battery, thermal cut-out and GPIO conditions.

The WM9711L operates at supply voltages from 1.8 to 3.6 Volts. Each section of the chip can be powered down under software control to save power. The device is available in a small leadless 7x7mm QFN package, ideal for use in hand-held portable systems, or in the industry standard 48-pin TQFP package.

FEATURES

- AC'97 Rev 2.2 compatible stereo codec
  - DAC SNR 94dB, THD –87dB
  - ADC SNR 92dB, THD –87dB
  - Variable Rate Audio, supports all WinCE sample rates
  - Tone Control, Bass Boost and 3D Enhancement
- On-chip 45mW headphone driver
- On-chip 400mW mono speaker driver
- Stereo, mono or differential microphone input
  - Automatic Level Control (ALC)
- Auxiliary mono DAC (ring tone or DC level generation)
- Seamless interface to wireless chipset
- Up to 5 GPIO pins
- 2 comparator inputs for battery monitoring
- 1.8V to 3.6V supplies
- 7x7mm QFN or 48-pin TQFP package options

APPLICATIONS

- Personal Digital Assistants (PDA)
- Smartphones
- Handheld and Tablet Computers

BLOCK DIAGRAM

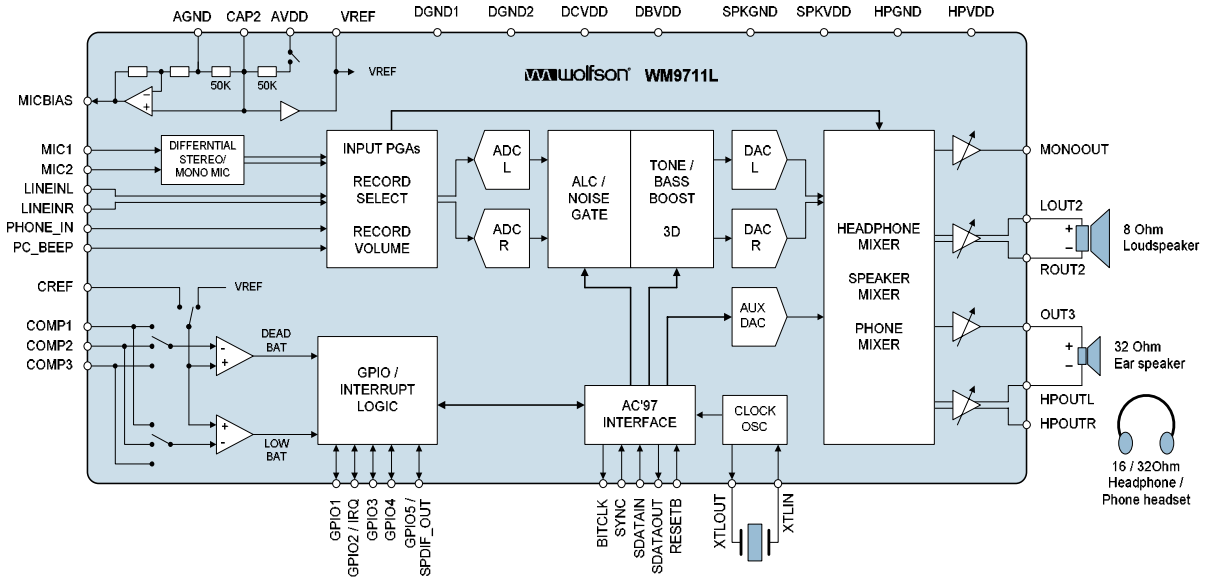

Copyright ©2004 Wolfson Microelectronics plc

TABLE OF CONTENTS

DESCRIPTION **1**
FEATURES **1**
APPLICATIONS **1**
BLOCK DIAGRAM **1**
TABLE OF CONTENTS **2**
PIN CONFIGURATION **4**
ORDERING INFORMATION **4**
PIN DESCRIPTION **5**
ABSOLUTE MAXIMUM RATINGS **6**
RECOMMENDED OPERATING CONDITIONS **6**
ELECTRICAL CHARACTERISTICS **7**
AUDIO OUTPUTS 7
AUDIO INPUTS 8
AUXILIARY MONO DAC (AUXDAC) 8
COMPARATORS 8
REFERENCE VOLTAGES 9
DIGITAL INTERFACE CHARACTERISTICS 9
HEADPHONE / SPEAKER OUTPUT THD VERSUS POWER 10
POWER CONSUMPTION 11
DEVICE DESCRIPTION **12**
INTRODUCTION 12
AUDIO PATHS OVERVIEW 13
AUDIO INPUTS **14**
LINE INPUT 14
MICROPHONE INPUT 14
PHONE INPUT 16
PCBEEP INPUT 17
AUDIO ADC **18**
RECORD SELECTOR 19
RECORD GAIN 20
AUTOMATIC LEVEL CONTROL 21
AUDIO DACS **24**
STEREO DAC 24
AUXILIARY DAC 27
ANALOGUE AUDIO OUTPUTS **28**
HEADPHONE OUTPUTS – HPOUTL AND HPOUTR 28
EAR SPEAKER OUTPUT – OUT3 29
LOUDSPEAKER OUTPUTS – LOUT2 AND ROUT2 30
PHONE OUTPUT (MONOOUT) 31
THERMAL CUTOUT 31
JACK INSERTION AND AUTO-SWITCHING 32
DIGITAL AUDIO (SPDIF) OUTPUT 33
AUDIO MIXERS 34
VARIABLE RATE AUDIO / SAMPLE RATE CONVERSION **36**
BATTERY ALARM **37**
PRINCIPLE OF OPERATION 37
GPIO AND INTERRUPT CONTROL **40**
POWER MANAGEMENT **43**

AC97 DATA AND CONTROL INTERFACE 46
INTERFACE PROTOCOL 46
INTERFACE TIMING 47
REGISTER MAP 50
REGISTER BITS BY ADDRESS 50
APPLICATIONS INFORMATION 59
RECOMMENDED EXTERNAL COMPONENTS 59
LINE OUTPUT 60
AC-COUPLED HEADPHONE OUTPUT 61
DC COUPLED (CAPLESS) HEADPHONE OUTPUT 61
BTL SPEAKER OUTPUT 62
COMBINED HEADSET / BTL EAR SPEAKER 62
COMBINED HEADSET / SINGLE-ENDED EAR SPEAKER 62
JACK INSERT DETECTION 63
HOOKSWITCH DETECTION 63
PACKAGE DRAWING - QFN 64
PACKAGE DRAWING – TQFP 65
IMPORTANT NOTICE 66
ADDRESS: 66

PIN CONFIGURATION

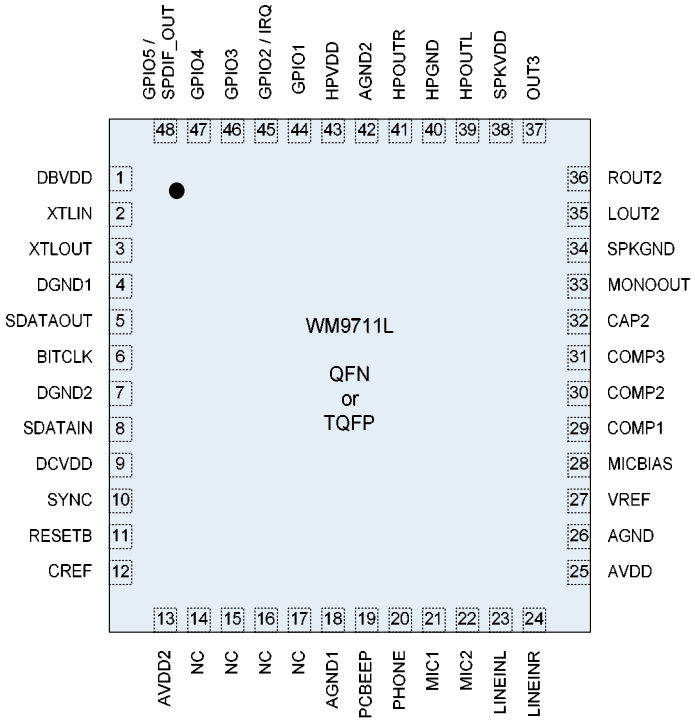

ORDERING INFORMATION

DEVICE	TEMPERATURE RANGE	PACKAGE	MOISTURE SENSITIVITY LEVEL	PEAK SOLDERING TEMPERATURE
WM9711LEFT/V	-25 to +85°C	48-pin TQFP	MSL1	240°C
WM9711LEFT/RV	-25 to +85°C	48-pin TQFP (tape and reel)	MSL1	240°C
WM9711LSEFT/V	-25 to +85°C	48-pin TQFP (lead free)	MSL1	260°C
WM9711LSEFT/RV	-25 to +85°C	48-pin TQFP (lead free, tape and reel)	MSL1	260°C

DEVICE	TEMPERATURE RANGE	PACKAGE	MOISTURE SENSITIVITY LEVEL	PEAK SOLDERING TEMPERATURE
WM9711LEFL/V	-25 to +85°C	48-pin QFN	MSL3	240°C
WM9711LEFL/RV	-25 to +85°C	48-pin QFN (tape and reel)	MSL3	240°C
WM9711LGEFL/V	-25 to +85°C	48-pin QFN (lead free)	MSL3	260°C
WM9711LGEFL/RV	-25 to +85°C	48-pin QFN (lead free, tape and reel)	MSL3	260°C

Note:
Reel quantity = 2,200

PIN DESCRIPTION

PIN	NAME	TYPE	DESCRIPTION
1	DBVDD	Supply	Digital I/O Buffer Supply
2	XTLIN	Digital Input	Clock Crystal Connection 1 / External Clock Input
3	XTLOUT	Digital Output	Clock Crystal Connection 2
4	DGND1	Supply	Digital Ground (return path for both DCVDD and DBVDD)
5	SDATAOUT	Digital Input	Serial Data Output from Controller / Input to WM9711L
6	BITCLK	Digital Output	Serial Interface Clock Output to Controller
7	DGND2	Supply	Digital Ground (return path for both DCVDD and DBVDD)
8	SDATAIN	Digital Output	Serial Data Input to Controller / Output from WM9711L
9	DCVDD	Supply	Digital Core Supply
10	SYNC	Digital Input	Serial Interface Synchronisation Pulse from Controller
11	RESETB	Digital Input	Reset (Active Low, resets all registers to their default)
12	CREF	Analogue Input	Reference for analogue comparators (COMP1,2,3)
13	AVDD2	Supply	Connect to AVDD
14	NC	No Connect	Leave this pin floating
15	NC	No Connect	Leave this pin floating
16	NC	No Connect	Leave this pin floating
17	NC	No Connect	Leave this pin floating
18	AGND1	Supply	Connect to AGND
19	PCBEEP	Analogue Input	Line Input to analogue audio mixers, typically used for beeps
20	PHONE	Analogue Input	Phone Input (RX)
21	MIC1	Analogue Input	Left Microphone Input
22	MIC2	Analogue Input	Right Microphone Input
23	LINEINL	Analogue Input	Left Line Input
24	LINEINR	Analogue Input	Right Line Input
25	AVDD	Supply	Analogue Supply (feeds audio DACs, ADCs, PGAs, mic boost, mixers)
26	AGND	Supply	Analogue Ground
27	VREF	Analogue Output	Internal Reference Voltage (buffered CAP2)
28	MICBIAS	Analogue Output	Bias Voltage for Microphones (buffered CAP2 $\times$ 1.8)
29	COMP1	Analogue Input	Comparator Input 1
30	COMP2	Analogue Input	Comparator Input 2
31	COMP3	Analogue Input	Comparator Input 3
32	CAP2	Analogue In / Out	Internal Reference Voltage (normally AVDD/2, if not overdriven)
33	MONOOUT	Analogue Output	Mono Output, intended for Phone TX signal
34	SPKGND	Supply	Speaker Ground (feeds output buffers on pins 35 and 36)
35	LOUT2	Analogue Output	Left Output 2 (Speaker, Line or Headphone)
36	ROUT2	Analogue Output	Right Output 2 (Speaker, Line or Headphone)
37	OUT3	Analogue Output	Analogue Output 3 (from AUXDAC or headphone pseudo-ground)
38	SPKVDD	Supply	Speaker Supply (feeds output buffers on pins 35 and 36)
39	HPOUTL	Analogue Output	Headphone Left Output
40	HPGND	Supply	Headphone Ground (feeds output buffers on pins 37, 39, 41)
41	HPOUTR	Analogue Output	Headphone Left Output
42	AGND2	Supply	Chip Substrate, connect to AGND
43	HPVDD	Digital In / Out	Headphone Supply (feeds output buffers on pins 37, 39, 41)
44	GPIO1	Digital In / Out	GPIO Pin 1
45	GPIO2 / IRQ	Digital In / Out	GPIO Pin 2 or IRQ (Interrupt Request) Output
46	GPIO3	Digital In / Out	GPIO Pin 3
47	GPIO4	Digital In / Out	GPIO Pin 4 (On reset, pin level configures device power up status. See Applications section for external components configuration)
48	GPIO5 / SPDIF_OUT	Digital In / Out	GPIO Pin 5 or SPDIF Digital Audio Output

ABSOLUTE MAXIMUM RATINGS

Absolute Maximum Ratings are stress ratings only. Permanent damage to the device may be caused by continuously operating at or beyond these limits. Device functional operating limits and guaranteed performance specifications are given under Electrical Characteristics at the test conditions specified.

ESD Sensitive Device. This device is manufactured on a CMOS process. It is therefore generically susceptible to damage from excessive static voltages. Proper ESD precautions must be taken during handling and storage of this device.

Wolfson tests its package types according to IPC/JEDEC J-STD-020B for Moisture Sensitivity to determine acceptable storage conditions prior to surface mount assembly. These levels are:

MSL1 = unlimited floor life at <30°C / 85% Relative Humidity. Not normally stored in moisture barrier bag.
MSL2 = out of bag storage for 1 year at <30°C / 60% Relative Humidity. Supplied in moisture barrier bag.
MSL3 = out of bag storage for 168 hours at <30°C / 60% Relative Humidity. Supplied in moisture barrier bag.

The Moisture Sensitivity Level for each package type is specified in Ordering Information.

Note:
The TQFP version is classified as MSL1 and does not require to be drybagged but will be supplied as such, labelled as MSL1.

CONDITION	MIN	MAX
Digital supply voltages (DCVDD, DBVDD)	-0.3V	+3.63V
Analogue supply voltages (AVDD, HPVDD, SPKVDD)	-0.3V	+3.63V
Voltage range digital inputs	DGND -0.3V	DBVDD +0.3V
Voltage range analogue inputs	AGND -0.3V	AVDD +0.3V
Voltage range, COMP3 (pin31)		+5V
Operating temperature range, T_A	-25°C	+85°C
Storage temperature (TQFP package only)	-65°C	+150°C

RECOMMENDED OPERATING CONDITIONS

PARAMETER	SYMBOL	TEST CONDITIONS	MIN	TYP	MAX	UNIT
Digital input/output buffer supply range	DBVDD		1.8	3.3	3.6	V
Digital core supply range	DCVDD		1.8	3.3	3.6	V
Analogue supply range	AVDD, HPVDD, SPKVDD		1.8	3.3	3.6	V
Digital ground	DCGND, DBGND			0		V
Analogue ground	AGND, HPGND, SPKGND			0		V
Difference AGND to DGND		Note 1	-0.3	0	+0.3	V

Notes:

1. AGND is normally the same potential as DGND.
2. AVDD, DCVDD and DBVDD can all be different
3. Digital supplies (DCVDD, DBVDD) must not exceed analogue supplies (AVDD, HPVDD, SPKVDD) by more than 0.3V

ELECTRICAL CHARACTERISTICS

AUDIO OUTPUTS

Test Conditions

DBVDD=3.3V, DCVDD = 3.3V, AVDD=HPVDD=SPKVDD =3.3V, T_A = +25°C, 1kHz signal, fs = 48kHz, 18-bit audio data unless otherwise stated.

PARAMETER	SYMBOL	TEST CONDITIONS	MIN	TYP	MAX	UNIT
DAC to Line-Out (HPOUTL/R or MONOOUT with 10kΩ / 50pF load)						
Full-scale output		AVDD = 3.3V, PGA gains set to 0dB		1		V rms
Signal to Noise Ratio (A-weighted)	SNR		85	94		dB
Total Harmonic Distortion	THD	-3dB output		-87	-80	dB
Power Supply Rejection	PSRR	20Hz to 20kHz		50		dB
Speaker Output (LOUT2/ROUT2 with 8Ω bridge tied load, INV=1)						
Output Power	P_O	Output power is very closely correlated with THD; see below.				
Output Power at 1% THD	P_O			400		mW
Abs. Max Output Power	$P_O$max			500		mW
Total Harmonic Distortion	THD	P_O=200mW		-66 0.05		dB %
Signal to Noise Ratio (A-weighted)	SNR		90	100		dB
Headphone Output (HPOUTL/R, OUT3 or LOUT2/ROUT2 with 16Ω or 32Ω load)						
		HPVDD=1.8V, R_L=32Ω		5		mW
Total Harmonic Distortion (Note 1)	THD	P_O=10mW, R_L=16Ω		-76		dB
		P_O=10mW, R_L=32Ω		-73		
		P_O=20mW, R_L=16Ω		-75		
		P_O=20mW, R_L=32Ω		-78		
Signal to Noise Ratio (A-weighted)	SNR	AVDD=3.3V	90	95		dB

Note:

1. All THD values are valid for the output power level quoted above – for example, at HPVDD=3.3V and R_L=16Ω, THD is –76dB when output power is 10mW. Higher output power is possible, but will result in a deterioration in THD.

AUDIO INPUTS

Test Conditions

DBVDD=3.3V, DCVDD = 3.3V, AVDD = 3.3V, T_A = +25°C, 1kHz signal, fs = 48kHz, 18-bit audio data unless otherwise stated.

PARAMETER	SYMBOL	TEST CONDITIONS	MIN	TYP	MAX	UNIT
LINEINL/R, MICL/R and PHONE pins						
Full Scale Input Signal Level (for ADC 0dB Input at 0dB Gain)	V_{INFS}	AVDD = 3.3V		1.0		V rms
		AVDD = 1.8V		0.545		
		differential input mode (MS = 01)	half of the value listed above			
Input Resistance	R_{IN}	0dB PGA gain		34		kΩ
		12dB PGA gain	10	16	22	
Input Capacitance				5		pF
Line input to ADC (LINEINL, LINEINR, PHONE)						
Signal to Noise Ratio (A-weighted)	SNR		85	92		dB
Total Harmonic Distortion	THD	-6dBFs		-87	-80	dB
Power Supply Rejection	PSRR	20Hz to 20kHz		50		dB
Microphone input to ADC (MIC1/2 pins)						
Signal to Noise Ratio (A-weighted)	SNR	20dB boost enabled		80		dB
Total Harmonic Distortion	THD	20dB boost enabled		-80		dB
Power Supply Rejection Ratio	PSRR	TBD		50		dB
Common Mode Rejection Ratio	CMRR	Differential mic mode		TBD		dB

AUXILIARY MONO DAC (AUXDAC)

Test Conditions

AVDD = 3.3V, T_A = +25°C, unless otherwise stated.

PARAMETER	SYMBOL	TEST CONDITIONS	MIN	TYP	MAX	UNIT
Resolution				12		bits
Full scale output voltage		AVDD=3.3V		1		Vrms
Signal to Noise Ratio (A-weighted)	SNR		65	70		dB
Total Harmonic Distortion	THD			-62	-50	dB

COMPARATORS

Test Conditions

AVDD = 3.3V, T_A = +25°C, unless otherwise stated.

PARAMETER	SYMBOL	TEST CONDITIONS	MIN	TYP	MAX	UNIT
COMP1, COMP2 and COMP3 (pins 29, 30, 31)						
Input Voltage			AGND		AVDD	V
Input leakage current				<10		nA
Comparator Input Offset (COMP1, COMP2 only)			-50		+50	mV
COMP2 delay (COMP2 only)		24.576MHz crystal	0		10.9	s

REFERENCE VOLTAGES

Test Conditions

DBVDD=3.3V, DCVDD = 3.3V, AVDD = 3.3V, T_A = +25°C, 1kHz signal, fs = 48kHz, 18-bit audio data unless otherwise stated.

PARAMETER	SYMBOL	TEST CONDITIONS	MIN	TYP	MAX	UNIT
Audio ADCs, DACs, Mixers						
Reference Input/Output	CAP2 pin		1.6	1.65	1.7	V
Buffered Reference Output	VREF pin		1.6	1.65	1.7	V
Microphone Bias						
Bias Voltage	$V_{MICBIAS}$		2.88	2.97	3.06	V
Bias Current Source	$I_{MICBIAS}$				3	mA
Output Noise Voltage	V_n	1K to 20kHz		15		nV/√Hz

DIGITAL INTERFACE CHARACTERISTICS

Test Conditions

DBVDD = 3.3V, DCVDD = 3.3V, T_A = +25°C, unless otherwise stated.

PARAMETER	SYMBOL	TEST CONDITIONS	MIN	TYP	MAX	UNIT
Digital Logic Levels (all digital input or output pins) – CMOS Levels						
Input HIGH level	V_{IH}		DBVDD×0.7			V
Input LOW level	V_{IL}				DBVDD×0.3	V
Output HIGH level	V_{OH}	source current = 2mA	DBVDD×0.9			
Output LOW level	V_{OL}	sink current = 2mA			DBVDD×0.1	
Clock Frequency						
Master clock (XTLIN pin)				24.576		MHz
AC'97 bit clock (BIT_CLK pin)				12.288		MHz
AC'97 sync pulse (SYNC pin)				48		kHz

Note:

1. All audio and non-audio sample rates and other timing scales proportionately with the master clock.
2. For signal timing on the AC-Link, please refer to the AC'97 specification (Revision 2.2)

HEADPHONE / SPEAKER OUTPUT THD VERSUS POWER

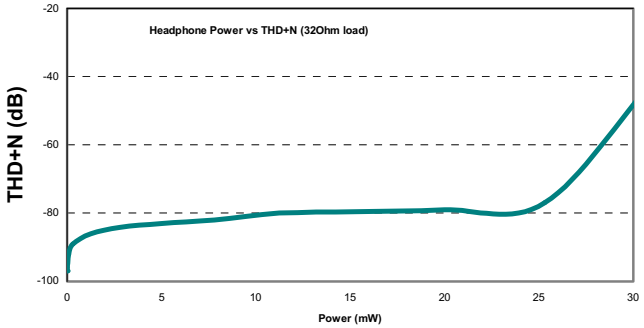

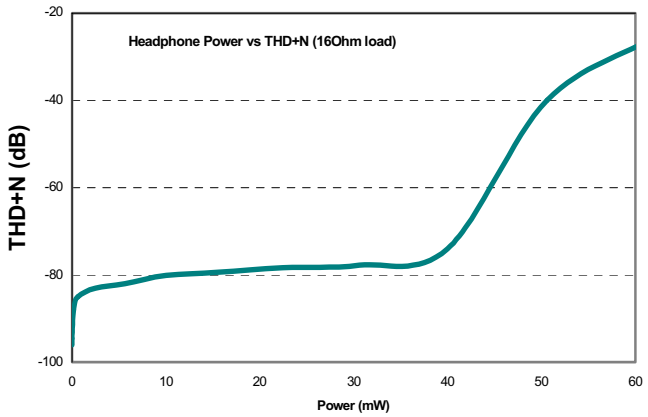

POWER CONSUMPTION

The power consumption of the WM9711L depends on the following factors.

- Supply voltages: Reducing the supply voltages also reduces digital supply currents, and therefore results in significant power savings especially in the digital sections of the WM9711L.
- Operating mode: Significant power savings can be achieved by always disabling parts of the WM9711L that are not used (e.g. audio ADC, DAC, AUXDAC, speaker driver, etc.)

Mode Description	26h 14:8	24h 15:0	Other Settings	AVDD		DCVDD		DBVDD		Total Power
				V	I (mA)	V	I (mA)	V	I (mA)	(mW)
OFF (lowest possible power)	1111111	0111111111111111	58h, SVD = 1	3.3	0.0005	3.3	0	3.3	0	0.00165
Clocks stopped				2.5	0.0004	2.5	0	2.5	0	0.001
				1.8	0.0003	1.8	0	1.8	0	0.00054
LPS (Low Power Standby)	1111111	0111111111111111		3.3	0.005	3.3	0	3.3	0	0.0165
VREF maintained using 1MOhm string				2.5	0.004	2.5	0	2.5	0	0.01
				1.8	0.003	1.8	0	1.8	0	0.0054
Standby Mode (ready to playback)	1110111	0111111111111111		3.3	0.56	3.3	0	3.3	0	1.848
VREF maintained using 50kOhm string				2.5	0.37	2.5	0	2.5	0	0.925
				1.8	0.241	1.8	0	1.8	0	0.4338
"Idle" Mode	1100111	0111111111111111		3.3	1.1	3.3	0	3.3	0	3.63
VREF maintained using 50kOhm string				2.5	0.76	2.5	0	2.5	0	1.9
use LPS mode instead, if possible				1.8	0.508	1.8	0	1.8	0	0.9144
Phone Call - using headphone / ear speaker	0110011	0111100010101100	0Eh, bit 7 = 1	3.3	2.36	3.3	0	3.3	0	7.788
HPOUTL, HPOUTR and OUT3 active			(mic gain boost)	2.5	1.838	2.5	0	2.5	0	4.595
AC-Link stopped				1.8	1.218	1.8	0	1.8	0	2.1924
Phone Call - using loudspeaker	1110011	0111101100110100	0Eh, bit 7 = 1	3.3	2.385	3.3	0	3.3	0	7.8705
AC-Link stopped			(mic gain boost)	2.5	1.837	2.5	0	2.5	0	4.5925
				1.8	1.218	1.8	0	1.8	0	2.1924
Record from mono microphone	1000110	0110101111111111	0Eh, bit 7 = 1	3.3	3.27	3.3	11.21	3.3	2.6	56.364
with MICBIAS			(mic gain boost)	2.5	2.66	2.5	7.78	2.5	2.13	31.425
all analogue outputs disabled				1.8	1.838	1.8	5.21	1.8	1.41	15.2244
Record phone call	0000000	0000000010001000	0Eh, bit 7 = 1	3.3	9.461	3.3	12.22	3.3	2.62	80.1933
both sides mixed to mono			(mic gain boost)	2.5	7.46	2.5	8.552	2.5	2.1	45.28
call using headphone / ear speaker				1.8	5.318	1.8	5.799	1.8	1.48	22.6746
DAC Playback - using loudspeaker	1000001	0001111101110111		3.3	3.45	3.3	9.884	3.3	2.6	52.5822
				2.5	2.549	2.5	6.755	2.5	2.1	28.51
				1.8	1.738	1.8	4.606	1.8	1.41	13.9572
DAC Playback - using headphone	0000001	0001110011101111		3.3	3.62	3.3	9.8	3.3	2.6	52.866
				2.5	2.71	2.5	6.78	2.5	2.1	28.975
				1.8	1.748	1.8	4.606	1.8	1.47	14.0832
DAC Playback - to Line-out	0000001	0001110011110111		3.3	3.62	3.3	9.8	3.3	2.6	52.866
				2.5	2.71	2.5	6.78	2.5	2.1	28.975
				1.8	1.748	1.8	4.606	1.8	1.41	13.9752
Maximum Power (everything on)	0000000	0000000000000000	0Eh, bit 7 = 1	3.3	9.593	3.3	12.26	3.3	2.62	80.7609
			(mic gain boost)	2.5	7.37	2.5	8.563	2.5	2.12	45.1325
				1.8	5.388	1.8	5.8	1.8	1.48	22.8024

Table 1 Supply Current Consumption (Simulation)

Notes:

1. All figures are at T_A = +25°C, audio sample rate fs = 48kHz, with zero signal (quiescent).
2. The power dissipated in the headphone and speaker is not included in the above table.

DEVICE DESCRIPTION

INTRODUCTION

The WM9711L is designed to meet the mixed-signal requirements of portable and wireless computer systems. It includes audio recording and playback, analogue comparators for battery alarms, and GPIO functions, all controlled through a single 5-wire AC-Link interface.

SOFTWARE SUPPORT

The basic audio features of the WM9711L are software compatible with standard AC'97 device drivers. However, to better support its unique and additional functions, Wolfson Microelectronics supplies custom device drivers for selected CPUs and operating systems. Please contact your local Wolfson Sales Office for more information.

AC'97 COMPATIBILITY

The WM9711L uses an AC'97 interface to communicate with a microprocessor or controller. The audio and GPIO functions are largely compliant with AC'97 Revision 2.2. The following **differences** from the AC'97 standard are noted:

- Pinout: The function of some pins has been changed to support device specific features. The PHONE and PCBEEP pins have been moved to different locations on the device package.
- Package: The default package for the WM9711L is a 7×7mm leadless QFN package. However, it may also be supplied in a 48-pin TQFP package, as specified in the AC'97 standard.
- Audio mixing: The WM9711L handles all the audio functions of a smartphone, including audio playback, voice recording, phone calls, phone call recording, ring tones, as well as simultaneous use of these features. The AC'97 mixer architecture does not fully support this. The WM9711L therefore uses a modified AC'97 mixer architecture with three separate mixers.
- Tone Control, Bass Boost and 3D Enhancement: These functions are implemented in the digital domain and therefore affect only signals being played through the audio DACs, not all output signals as stipulated in AC'97.

Some other functions are **additional** to AC'97:

- On-chip BTL loudspeaker driver
- On-chip BTL driver for ear speaker (phone receiver)
- Auxiliary mono DAC for ring tones, system alerts etc.
- 2 Analogue Comparators for Battery Alarm
- Programmable Filter Characteristics for Tone Control and 3D Enhancement

AUDIO PATHS OVERVIEW

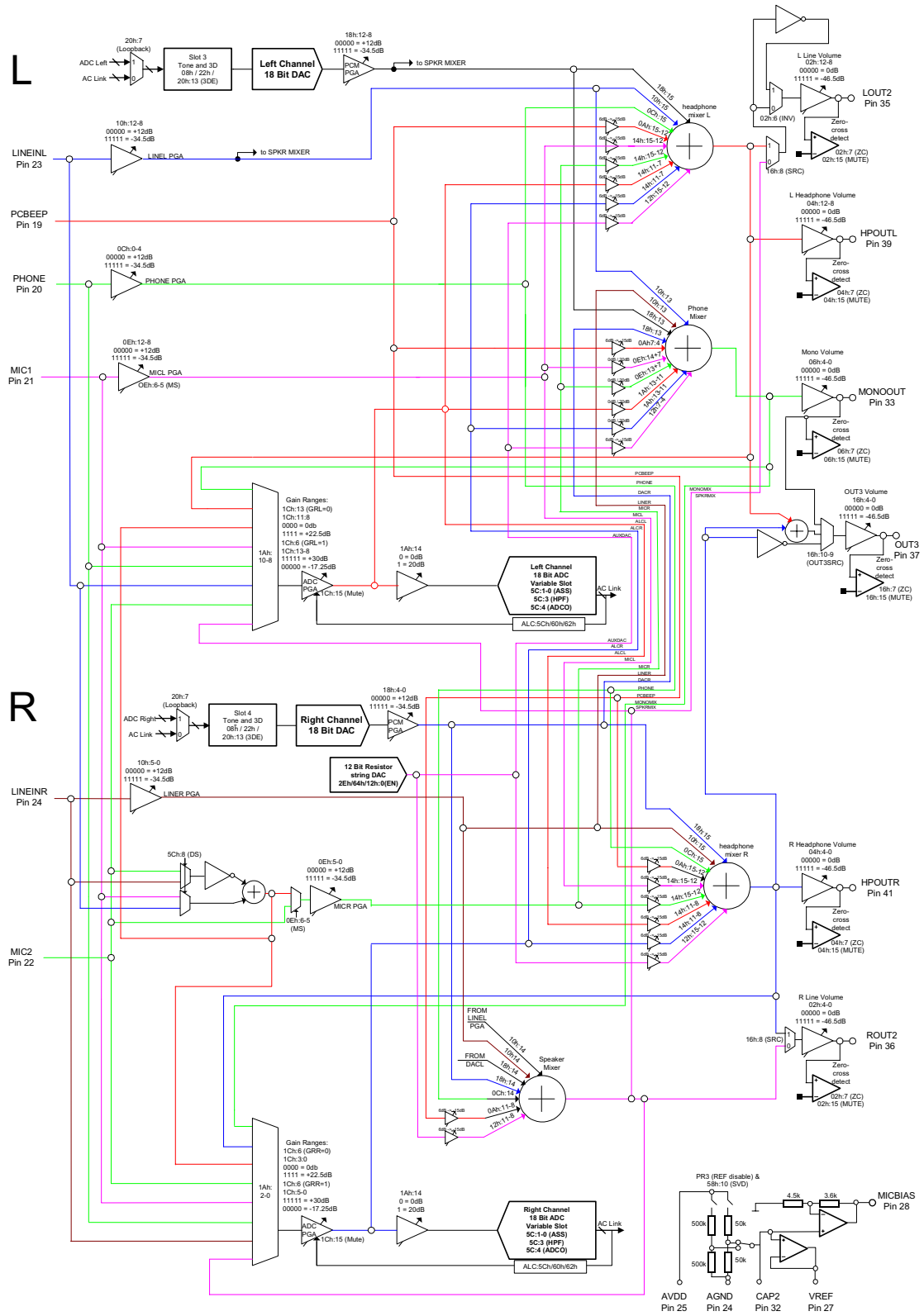

Figure 1 Audio Paths Overview

AUDIO INPUTS

The following sections give an overview of the analogue audio input pins and their function. For more information on recommended external components, please refer to the “Applications Information” section.

LINE INPUT

The LINEINL and LINEINR inputs are designed to record line level signals, and/or to mix into one of the analogue outputs.

Both pins are directly connected to the record selector. The record PGA adjusts the recording volume, controlled by register 1Ch or by the ALC function.

For analogue mixing, the line input signals pass through a separate PGA, controlled by register 10h. The signals can be routed into all three output mixers (headphone, speaker and phone). Each LINEIN-to-mixer path has an independent mute bit. When the line inputs are not used, the line-in PGA can be switched off to save power (see “Power Management” section).

LINEINL and LINEINR are biased internally to the reference voltage VREF. Whenever the inputs are muted or the device placed into standby mode, the inputs remain biased to VREF using special anti-thump circuitry to suppress any audible clicks when changing inputs.

REGISTER ADDRESS	BIT	LABEL	DEFAULT	DESCRIPTION
10h	12:8	LINEINL VOL	01000 (0dB)	LINEINL input gain 00000: +12dB … (1.5dB steps) 11111: -34.5dB
	4:0	LINEINR VOL	01000 (0dB)	LINEINR input gain similar to LINEINLVOL
	15	L2H	1	Mute LINEIN path to headphone mixer 1: Mute, 0: No mute (ON)
	14	L2S	1	Mute LINEIN path to speaker mixer 1: Mute, 0: No mute (ON)
	13	L2P	1	Mute LINEIN path to phone mixer 1: Mute, 0: No mute (ON)

Table 2 Line Input Control

MICROPHONE INPUT

The MIC1 and MIC2 inputs are designed for direct connection to single-ended mono, stereo or differential mono microphone. If the microphone is mono, the same signal appears on both left and right channels. In stereo mode, MIC1 is routed to the left and MIC2 to the right channel.

For voice recording, the microphone signal is directly connected to the record selector. The record PGA adjusts the recording volume, controlled by register 1Ch or by the ALC function.

For analogue mixing, the signal passes through a separate PGA, controlled by register 0Eh. The microphone signal can be routed into the phone mixer (for normal phone call operation) and/or the headphone mixer (using register 14h, see “Audio Mixers / Sidetone Control” section), but not into the speaker mixer (to prevent acoustic feedback from the speaker into the microphone). When the microphone inputs are not used, the microphone PGA can be switched off to save power (see “Power Management” section).

MIC1 and MIC2 are biased internally to the reference voltage VREF. Whenever the inputs are muted or the device placed into standby mode, the inputs remain biased to VREF using special anti-thump circuitry to suppress any audible clicks when changing inputs.

It is also possible to use the LINEINL and LINEINR pins as a second differential microphone input. This is achieved by setting the DS bit (register 5Ch, bit 11) to '1'. This disables the line-in audio paths and routes the signal from LINEINL and LINEINR through the differential mic path, as if it came from the MIC1 and MIC2 pins. Only one differential microphone be used at a time. The DS bit only has an effect when MS = 01 (differential mode).

REGISTER ADDRESS	BIT	LABEL	DEFAULT	DESCRIPTION	
0Eh Mic Volume	14	M12P	1	Mute MIC1 path to phone mixer 1: Mute, 0: No mute (ON)	
	13	M22P	1	Mute MIC2 path to phone mixer 1: Mute, 0: No mute (ON)	
	12:8	LMICVOL	01000 (0dB)	Left microphone volume Only used when MS = 11 Similar to MICVOL	
	7	20dB	0	Microphone gain boost (Note 1) 1: 20dB boost ON 0: No boost (0dB gain)	
	6:5	MS	00	Microphone mode select	
				00	Single-ended mono (left) left = right = MIC1 (pin 21) Volume controlled by MICVOL
				01	Differential mono mode left = right = MIC1 – MIC2 Volume controlled by MICVOL
				10	Single-ended mono (right) left = right = MIC2 (pin 22) Volume controlled by MICVOL
				11	: Stereo mode MIC1 = left, MIC2 = right Left Volume controlled by LMICVOL Right volume controlled by MICVOL
	4:0	MICVOL	01000 (0dB)	Microphone volume to mixers 00000: +12dB … (1.5dB steps) 11111: -34.5dB	
Reg 5Ch Additional Analogue Functions	8	DS	0	Differential Microphone Select 0 : Use MIC1 and MIC2 1: Use LINEL and LINER (Note 2)	

Table 3 Microphone Input Control

Note:

1. The 20dB gain boost acts on the input to the phone mixer only. A separate microphone boost for recording can be enabled using the BOOST bit in register 1Ah.

2. When the LINEL and LINER are selected for differential microphone select then the MIC1 and MIC2 input pins become disabled, these signals can therefore not be routed internally to the device.

MICROPHONE BIAS

The MICBIAS output (pin 28) provides a low noise reference voltage suitable for biasing electret type microphones and the associated external resistor biasing network. The internal MICBIAS circuitry is shown below. Note that the maximum source current capability for MICBIAS is 3mA. The external biasing resistors and microphone cartridge therefore must limit the MICBIAS current to 3mA.

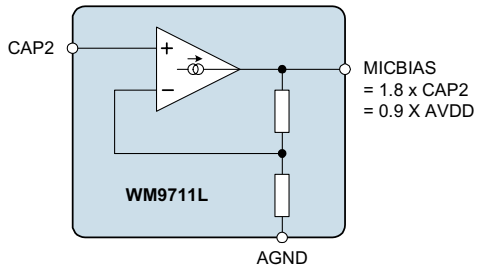

Figure 2 Microphone Bias Schematic

PHONE INPUT

Pin 20 (PHONE) is a mono, line level input designed to connect to the receive path of a telephony device.

The pin connects directly to the record selector for phone call recording (Note: to record both sides of a phone call, one ADC channel should record the PHONE signal while the other channel records the MIC signal). The RECVOL PGA adjusts the recording volume, controlled by register 1Ch or by the ALC function.

To listen to the PHONE signal, the signal passes through a separate PGA, controlled by register 0Ch. The signal can be routed into the headphone mixer (for normal phone call operation) and/or the speaker mixer (for speakerphone operation), but not into the phone mixer (to prevent forming a feedback loop). When the phone input is not used, the phone-in PGA can be switched off to save power (see “Power Management” section).

PHONE is biased internally to the reference voltage VREF. Whenever the input is muted or the device placed into standby mode, the input remains biased to VREF using special anti-thump circuitry to suppress any audible clicks when changing inputs.

REGISTER ADDRESS	BIT	LABEL	DEFAULT	DESCRIPTION
0Ch Phone Input	15	P2H	1	Mute PHONE path to headphone mixer 1: Mute, 0: No mute (ON)
	14	P2S	1	Mute PHONE path to speaker mixer 1: Mute, 0: No mute (ON)
	4:0	PHONE VOL	01000 (0dB)	PHONE input gain 00000: +12dB … (1.5dB steps) 11111: -34.5dB

Table 4 Phone Input Control

PCBEEP INPUT

Pin 19 (PCBEEP) is a mono, line level input intended for externally generated signal or warning tones. It is routed directly to the record selector and all three output mixers, without an input amplifier. The signal gain into each mixer can be independently controlled, with a separate mute bit for each signal path.

REGISTER ADDRESS	BIT	LABEL	DEFAULT	DESCRIPTION
0Ah PCBEEP input	15	B2H	1	Mute PCBEEP path to headphone mixer 1: Mute, 0: No mute (ON)
	14:12	B2HVOL	010 (0dB)	PCBEEP to headphone mixer gain 000: +6dB … (3dB steps) 111: -15dB
	11	B2S	1	Mute PCBEEP path to speaker mixer 1: Mute, 0: No mute (ON)
	10:8	B2SVOL	010 (0dB)	PCBEEP to speaker mixer gain 000: +6dB … (3dB steps) 111: -15dB
	7	B2P	1	Mute PCBEEP path to phone mixer 1: Mute, 0: No mute (ON)
	6:4	B2PVOL	010 (0dB)	PCBEEP to phone mixer gain 000: +6dB … (3dB steps) 111: -15dB

Table 5 PCBEEP Control

AUDIO ADC

The WM9711L has a stereo sigma-delta ADC to digitise audio signals. The ADC achieves high quality audio recording at low power consumption. The ADC sample rate can be controlled by writing to a control register (see “Variable Rate Audio”). It is independent of the DAC sample rate.

To save power, the left and right ADCs can be separately switched off using the PD11 and PD12 bits, whereas PR0 disables both ADCs (see “Power Management” section). If only one ADC is running, the same ADC data appears on both the left and right AC-Link slots.

HIGH PASS FILTER

The WM9711L audio ADC incorporates a digital high-pass filter that eliminates any DC bias from the ADC output data. The filter is enabled by default. For DC measurements, it can be disabled by writing a ‘1’ to the HPF bit (register 5Ch, bit 3).

ADC SLOT MAPPING

By default, the output of the left audio ADC appears on slot 3 of the SDATAIN signal (pin 8), and the right ADC data appears on slot 4. However, the ADC output data can also be sent to other slots, by setting the ASS (ADC slot select) control bits as shown below.

REGISTER ADDRESS	BIT	LABEL	DEFAULT	DESCRIPTION
5Ch Additional Function Control	3	HPF	0	High-pass filter disable 0: Filter enabled (for audio) 1: Filter disabled (for DC measurements)
	1:0	ASS	00	ADC to slot mapping 00: Left = Slot 3, Right = Slot 4 (default) 01: Left = Slot 7, Right = Slot 8 10: Left = Slot 6, Right = Slot 9 11: Left = Slot 10, Right = Slot 11

Table 6 ADC Slot Mapping

RECORD SELECTOR

The record selector determines which input signals are routed into the audio ADC. The left and right channels can be selected independently. This is useful for recording a phone call: one channel can be used for the RX signal and the other for the TX signal, so that both sides of the conversation are digitised.

REGISTER ADDRESS	BIT	LABEL	DEFAULT	DESCRIPTION
1Ah Record Select	14	BOOST	0	20dB Boost 1: Boost ADC input signal by 20dB 0 :No boost
	13:12	R2P	11	Record to phone path enable 00: Left ADC and Right ADC to phone mixer 01 : Left ADC to phone mixer 10: Right ADC to phone imixer 11 : Muted
	11	R2PBOOST	0	20dB Boost for ADC to phone signal 1: Boost signal by 20dB 0 :No boost
	10:8	RECSL	000	Left ADC signal source 000: MIC* (pre-PGA) 001-010: Reserved (do not use this setting) 011: Speaker mix 100: LINEINL (pre-PGA) 101: Headphone Mix (left) 110: Phone Mix 111: PHONE (pre-PGA)
	2:0	RECSR	000	Right ADC signal source 000: MIC* (pre-PGA) 001-010: Reserved (do not use this setting) 011: Speaker mix 100: LINEINR (pre-PGA) 101: Headphone Mix (right) 110: Phone Mix 111: PHONE (pre-PGA)

Table 7 Audio Record Selector

Note:

*In stereo mic mode, MIC1 is routed to the left ADC and MIC2 to the right ADC. In all mono mic modes, the same signal (MIC1, MIC2 or MIC1-MIC2) is routed to both the left and right ADCs. See “Microphone Input” section for details.

RECORD GAIN

The amplitude of the signal that enters the audio ADC is controlled by the Record PGA (Programmable Gain Amplifier). The PGA gain can be programmed either by writing to the Record Gain register, or by the Automatic Level Control (ALC) circuit (see next section). When the ALC is enabled, any writes to the Record Gain register have no effect.

Two different gain ranges can be implemented: the standard gain range defined in the AC'97 standard, or an extended gain range with smaller gain steps. The ALC circuit always uses the extended gain range, as this has been found to result in better sound quality.

The output of the Record PGA can also be mixed into the phone and/or headphone outputs (see "Audio Mixers"). This makes it possible to use the ALC function for the microphone signal in a smartphone application.

REGISTER ADDRESS	BIT	LABEL	DEFAULT	DESCRIPTION	
1Ch Record Gain	15	RMU	1	Mute Audio ADC (both channels) 1: Mute (OFF) 0: No Mute (ON)	
	14	GRL	0	Gain range select (left) 0: Standard (0 to 22.5dB, 1.5dB step size) 1: Extended (-17.25 to +30dB, 0.75dB steps)	
	13:8	RECVOLL	000000	Record Volume (left)	
				Standard (GRL=0)	Extended (GRL=1)
				XX0000: 0dB XX0001: +1.5dB … (1.5dB steps) XX1111: +22.5dB	000000: -17.25dB 000001: -16.5dB … (0.75dB steps) 111111: +30dB
	7	ZC	0	Zero Cross Enable 0: Record Gain changes immediately 1: Record Gain changes when signal is zero or after time-out	
	6	GRR	0	Gain range select (right) Similar to GRL	
	5:0	RECVOLR	000000	Record Volume (right) Similar to RECVOLL	

Table 8 Record Gain Register

AUTOMATIC LEVEL CONTROL

The WM9711L has an automatic level control that aims to keep a constant recording volume irrespective of the input signal level. This is achieved by continuously adjusting the PGA gain so that the signal level at the ADC input remains constant. A digital peak detector monitors the ADC output and changes the PGA gain if necessary.

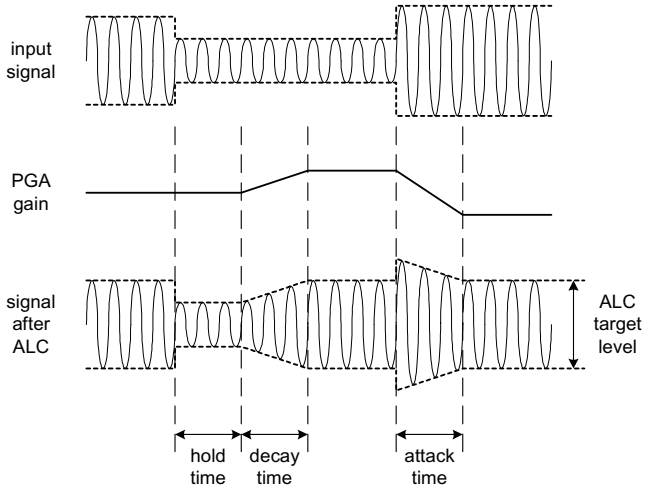

Figure 3 ALC Operation

The ALC function is enabled using the ALCSEL control bits. When enabled, the recording volume can be programmed between –6dB and –28.5dB (relative to ADC full scale) using the ALCL register bits.

HLD, DCY and ATK control the hold, decay and attack times, respectively:

Hold time is the time delay between the peak level detected being below target and the PGA gain beginning to ramp up. It can be programmed in power-of-two (2^n) steps, e.g. 2.67ms, 5.33ms, 10.67ms etc. up to 43.7s. Alternatively, the hold time can also be set to zero. The hold time only applies to gain ramp-up, there is no delay before ramping the gain down when the signal level is above target.

Decay (Gain Ramp-Up) Time is the time that it takes for the PGA gain to ramp up across 90% of its range (e.g. from –15B up to 27.75dB). The time it takes for the recording level to return to its target value therefore depends on both the decay time and on the gain adjustment required. If the gain adjustment is small, it will be shorter than the decay time. The decay time can be programmed in power-of-two (2^n) steps, from 24ms, 48ms, 96ms, etc. to 24.58s.

Attack (Gain Ramp-Down) Time is the time that it takes for the PGA gain to ramp down across 90% of its range (e.g. from 27.75dB down to –15B gain). The time it takes for the recording level to return to its target value therefore depends on both the attack time and on the gain adjustment required. If the gain adjustment is small, it will be shorter than the attack time. The attack time can be programmed in power-of-two (2^n) steps, from 6ms, 12ms, 24ms, etc. to 6.14s.

When operating in stereo, the peak detector takes the maximum of left and right channel peak values, and any new gain setting is applied to both left and right PGAs, so that the stereo image is preserved. However, the ALC function can also be enabled on one channel only. In this case, only one PGA is controlled by the ALC mechanism, while the other channel runs independently with its PGA gain set through the control register.

REGISTER ADDRESS	BIT	LABEL	DEFAULT	DESCRIPTION
62h ALC / Noise Gate Control	15:14	ALCSEL	00 (OFF)	ALC function select 00 = ALC off (PGA gain set by register) 01 = Right channel only 10 = Left channel only 11 = Stereo (PGA registers unused) Note: Ensure that RECVOLL and RECVOLR settings (reg. 1Ch) are the same before entering this mode.
	13:11	MAXGAIN	111 (+30dB)	PGA gain limit for ALC 111 = +30dB 110 = +24dB ….(6dB steps) 001 = -6dB 000 = -12dB
	10:9	ZC TIMEOUT	11	Programmable zero cross timeout 11 2^{17} x MCLK period 10 2^{16} x MCLK period 01 2^{15} x MCLK period 00 2^{14} x MCLK period
	8	ALCZC	0	ALC Zero Cross enable (overrides ZC bit in register 1Ch) 0: PGA Gain changes immediately 1: PGA Gain changes when signal is zero or after time-out
60h ALC Control	15:12	ALCL	1011 (-12dB)	ALC target – sets signal level at ADC input 0000 = -28.5dB FS 0001 = -27.0dB FS … (1.5dB steps) 1110 = -7.5dB FS 1111 = -6dB FS
	11:8	HLD	0000 (0ms)	ALC hold time before gain is increased. 0000 = 0ms 0001 = 2.67ms 0010 = 5.33ms … (time doubles with every step) 1111 = 43.691s
	7:4	DCY	0011 (192ms)	ALC decay (gain ramp-up) time 0000 = 24ms 0001 = 48ms 0010 = 96ms … (time doubles with every step) 1010 or higher = 24.58s
	3:0	ATK	0010 (24ms)	ALC attack (gain ramp-down) time 0000 = 6ms 0001 = 12ms 0010 = 24ms … (time doubles with every step) 1010 or higher = 6.14s

Table 9 ALC Control

MAXIMUM GAIN

The MAXGAIN register sets the maximum gain value that the PGA can be set to whilst under the control of the ALC. This has no effect on the PGA when ALC is not enabled.

PEAK LIMITER

To prevent clipping when a large signal occurs just after a period of quiet, the ALC circuit includes a limiter function. If the ADC input signal exceeds 87.5% of full scale (–1.16dB), the PGA gain is ramped down at the maximum attack rate (as when ATK = 0000), until the signal level falls below 87.5% of full scale. This function is automatically enabled whenever the ALC is enabled.

(Note: If ATK = 0000, then the limiter makes no difference to the operation of the ALC. It is designed to prevent clipping when long attack times are used).

NOISE GATE

When the signal is very quiet and consists mainly of noise, the ALC function may cause “noise pumping”, i.e. loud hissing noise during silence periods. The WM9711L has a noise gate function that prevents noise pumping by comparing the signal level at the input pins (i.e. before the record PGA) against a noise gate threshold, NGTH. Provided that the noise gate function is enabled (NGAT = 1), the noise gate cuts in when:

- Signal level at ADC [dB] < NGTH [dB] + PGA gain [dB] + Mic Boost gain [dB]

This is equivalent to:

- Signal level at input pin [dB] < NGTH [dB]

The PGA gain is then held constant (preventing it from ramping up as it normally would when the signal is quiet). If the NGG bit is set, the ADC output is also muted when the noise gate cuts in.

The table below summarises the noise gate control register. The NGTH control bits set the noise gate threshold with respect to the ADC full-scale range. The threshold is adjusted in 1.5dB steps. Levels at the extremes of the range may cause inappropriate operation, so care should be taken with set–up of the function. Note that the noise gate only works in conjunction with the ALC function, and always operates on the same channel(s) as the ALC (left, right, both, or none).

REGISTER ADDRESS	BIT	LABEL	DEFAULT	DESCRIPTION
62h ALC / Noise Gate Control	7	NGAT	0	Noise gate function enable 1 = enable 0 = disable
	5	NGG	0	Noise gate type 0 = PGA gain held constant 1 = mute ADC output
	4:0	NGTH(4:0)	00000	Noise gate threshold -76.5dBfs -75dBfs … 1.5 dB steps 11110 -31.5dBfs 11111 -30dBfs

Table 10 Noise Gate Control

AUDIO DACS

STEREO DAC

The WM9711L has a stereo sigma-delta DAC that achieves high quality audio playback at low power consumption. Digital tone control, adaptive bass boost and 3-D enhancement functions operate on the digital audio data before it is passed to the stereo DAC. (Contrary to the AC'97 specification, they have no effect on analogue input signals or signals played through the auxiliary DAC. Nevertheless, the ID2 and ID5 bits in the reset register, 00h, are set to '1' to indicate that the WM9711L supports tone control and bass boost.)

The DAC output has a PGA for volume control. The DAC sample rate can be controlled by writing to a control register (see "Variable Rate Audio"). It is independent of the ADC sample rate. The left and right DACs can be separately powered down using the PD13 and PD14 control bits, whereas the PR1 bit disables both DACs (see "Power Management" section).

STEREO DAC VOLUME

The volume of the DAC output signal is controlled by a PGA (Programmable Gain Amplifier). It can be mixed into the headphone, speaker and phone output paths (see "Audio Mixers").

REGISTER ADDRESS	BIT	LABEL	DEFAULT	DESCRIPTION
18h DAC Volume	15	D2H	1	Mute DAC path to headphone mixer 1: Mute, 0: No mute (ON)
	14	D2S	1	Mute DAC path to speaker mixer 1: Mute, 0: No mute (ON)
	13	D2P	1	Mute DAC path to phone mixer 1: Mute, 0: No mute (ON)
	12:8	DACL VOL	01000 (0dB)	Left DAC Volume 00000: +12dB … (1.5dB steps) 11111: -34.5dB
	4:0	DACR VOL	01000 (0dB)	Right DAC Volume similar to DACLVOL
5Ch Additional Functions (1)	15	AMUTE	N/A	Read-only bit to indicate auto-muting 1: DAC auto-muted 0: DAC not muted
	7	AMEN	0	DAC Auto-Mute Enable 1: Automatically mutes analogue output of stereo DAC if digital input is zero 0: Auto-mute OFF

Table 11 Stereo DAC Volume Control

TONE CONTROL / BASS BOOST

The WM9711L provides separate controls for bass and treble with programmable gains and filter characteristics. This function operates on digital audio data before it is passed to the audio DACs.

Bass control can take two different forms:

- Linear bass control: bass signals are amplified or attenuated by a user programmable gain. This is independent of signal volume, and very high bass gains on loud signals may lead to signal clipping.
- Adaptive bass boost: The bass volume is amplified by a variable gain. When the bass volume is low, it is boosted more than when the bass volume is high. This method is recommended because it prevents clipping, and usually sounds more pleasant to the human ear.

Treble control applies a user programmable gain, without any adaptive boost function.

Treble, linear bass and 3D enhancement can all produce signals that exceed full-scale. In order to avoid limiting under these conditions, it is recommended to set the DAT bit to attenuate the digital input signal by 6dB. The gain at the outputs should be increased by 6dB to compensate for the attenuation. Cut-only tone adjustment and adaptive bass boost cannot produce signals above full-scale and therefore do not require the DAT bit to be set.

REGISTER ADDRESS	BIT	LABEL	DEFAULT	DESCRIPTION		
08h DAC Tone Control	15	BB	0	Bass Boost 0 = OFF 1 = ON		
	12	BC	0	Bass Cut-off Frequency 0 = Low (130Hz at 48kHz sampling) 1 = High (200Hz at 48kHz sampling)		
	11:8	BASS	1111 (OFF)	Bass Intensity		
				Code	BB=0 (Normal)	BB=1 (Boost)
				0000	+9dB	15 (max)
				0001	+9dB	14
				0010	+7.5dB	13
				…	(1.5dB steps)	…
				0111	0dB	8
				…	(1.5dB steps)	…
				1011-1101	-6dB	4-2
				1110	-6dB	1 (min)
				1111	Bypass (OFF)	
	6	DAT	0	-6dB attenuation 0 = Off 1 = On		
	4	TC	0	Treble Cut-off Frequency 0 = High (8kHz at 48kHz sampling) 1 = Low (4kHz at 48kHz sampling)		
	3:0	TRBL	1111 (Disabled)	Treble Intensity 0000 or 0001 = +9dB 0010 = +7.5dB … (1.5dB steps) 1011 to 1110 = -6dB 1111 = Treble Control Disabled		

Table 12 DAC Tone Control

Note:

1. All cut-off frequencies change proportionally with the DAC sample rate.

3D STEREO ENHANCEMENT

The 3D stereo enhancement function artificially increases the separation between the left and right channels by amplifying the (L-R) difference signal in the frequency range where the human ear is sensitive to directionality. The programmable 3D depth setting controls the degree of stereo expansion introduced by the function. Additionally, the upper and lower limits of the frequency range used for 3D enhancement can be selected using the 3DFILT control bits.

REGISTER ADDRESS	BIT	LABEL	DEFAULT	DESCRIPTION
20h General Purpose	13	3DE	0 (disabled)	3D enhancement enable
22h DAC 3D Control	5	3DLC	0	Lower Cut-off Frequency 0 = Low (200Hz at 48kHz sampling) 1 = High (500Hz at 48kHz sampling)
	4	3DUC	0	Upper Cut-off Frequency 0 = High (2.2kHz at 48kHz sampling) 1 = Low (1.5kHz at 48kHz sampling)
	3:0	3DDEPTH	0000	3D Depth 0000: 0% (minimum 3D effect) 0001: 6.67% … 1110: 93.3% 1111: 100% (maximum)

Table 13 Stereo Enhancement Control

Note:

1. All cut-off frequencies change proportionally with the DAC sample rate.

AUXILIARY DAC

AUXDAC is a simple 12-bit mono DAC. It can be used to generate DC signals (with the numeric input written into a control register), or AC signals such as telephone-quality ring tones or system beeps (with the input signal supplied through an AC-Link slot). In AC mode (XSLE = 1), the input data is binary offset coded; in DC mode (XSLE = 0), there is no offset.

The analogue output of AUXDAC is routed directly into the output mixers. The signal gain into each mixer can be adjusted at the mixer inputs using control register 12h. In slot mode (XSLE = 1), the AUXDAC also supports variable sample rates (See "Variable Rate Audio" section).

When the auxiliary DAC is not used, it can be powered down by setting AXE = 0. This is also the default setting.

REGISTER ADDRESS	BIT	LABEL	DEFAULT	DESCRIPTION
64h AUDAC Input Control	15	XSLE	0	AUXDAC input selection 0: from AUXDACVAL (for DC signals) 1: from AC-Link slot selected by AUXDACSLT (for AC signals)
	14:12	AUXDAC SLT	000	AUXDAC Input Selection 000 – Slot 5, bits 8-19 (with XSLE=1) 001 – Slot 6, bits 8-19 (with XSLE=1) 010 – Slot 7, bits 8-19 (with XSLE=1) 011 – Slot 8, bits 8-19 (with XSLE=1) 100 – Slot 9, bits 8-19 (with XSLE=1) 101 – Slot 10, bits 8-19 (with XSLE=1) 110 – Slot 11, bits 8-19 (with XSLE=1) 111 – RESERVED (do not use)
	11:0	AUXDAC VAL	000h	AUXDAC Digital Input (with XSLE=0) 000h: minimum FFFh: full-scale
12h AUXDAC Output Control	15	A2H	1	Mute AUXDAC path to headphone mixer 1: Mute, 0: No mute (ON)
	14:12	A2HVOL	010 (0dB)	AUXDAC to headphone mixer gain 000: +6dB … (3dB steps) 111: -15dB
	11	A2S	1	Mute AUXDAC path to speaker mixer 1: Mute, 0: No mute (ON)
	10:8	A2SVOL	010 (0dB)	AUXDAC to speaker mixer gain 000: +6dB … (3dB steps) 111: -15dB
	7	A2P	1	Mute AUXDAC path to phone mixer 1: Mute, 0: No mute (ON)
	6:4	A2PVOL	010 (0dB)	AUXDAC to phone mixer gain 000: +6dB … (3dB steps) 111: -15dB
	0	AXE	0	0: AUXDAC off 1: AUXDAC enabled

Table 14 AUXDAC Control

ANALOGUE AUDIO OUTPUTS

The following sections give an overview of the analogue audio output pins. For more information on recommended external components, please refer to the "Applications Information" section.

HEADPHONE OUTPUTS – HPOUTL AND HPOUTR

The HPOUTL and HPOUTR (pins 39 and 41) are designed to drive a 16Ω or 32Ω headphone or a line output. They can also be used as line-out pins. The output signal is produced by the headphone mixer.

The signal volume on HPOUTL and HPOUTR can be independently adjusted under software control by writing to register 04h. When HPOUTL and HPOUTR are not used, the output drivers can be disabled to save power (see "Power Management" section). Both pins remain at the same DC level (the reference voltage VREF) when they are disabled, so that no click noise is produced.

REGISTER ADDRESS	BIT	LABEL	DEFAULT	DESCRIPTION
04h HPOUTL / HPOUTR Volume	15	MUTE	1	Mute HPOUTL and HPOUTR 1: Mute (OFF) 0: No Mute (ON)
	13:8	HPOUTLVOL	000000 (0dB)	HPOUTL Volume 000000: 0dB (maximum) 000001: -1.5dB … (1.5dB steps) 011111: -46.5dB 1xxxxx: -46.5dB
	7	ZC	0	Zero Cross Enable 0: Change gain immediately 1: Change gain only on zero crossings, or after time-out
	5:0	HPOUTRVOL	00000 (0dB)	HPOUTR Volume Similar to HPOUTLVOL

Table 15 HPOUTL / HPOUTR Control

EAR SPEAKER OUTPUT – OUT3

Pin 37 (OUT3) has a buffer that can drive load impedances down to 16Ω. It can be used to:

- Drive an ear speaker (phone receiver). The speaker can be connected differentially between OUT3 and HPOUTL, or in single-ended configuration (OUT3 to HPGND). The ear speaker output is produced by the headphone mixer. The right signal must be inverted (OUT3INV = 1), so that the left and right channel are mixed to mono in the speaker [L–(-R) = L+R].
- Eliminate the DC blocking capacitors on HPOUTL and HPOUTR. In this configuration, OUT3 produces a buffered midrail voltage (AVDD/2) and is connected to the headphone socket's ground pin (see "Applications Information")
- Produce the inverse of the MONOOUT signal, for a differential mono output.

Note: OUT3 can only handle one of the above functions at any given time.

REGISTER ADDRESS	BIT	LABEL	DEFAULT	DESCRIPTION	
16h OUT3 Control	15	MUTE	1	Mute OUT3 1: Mute (Buffer OFF) 0: No Mute (Buffer ON)	
	10:9	OUT3 SRC	00	Source of OUT3 signal	
				00	inverse of HPOUTR (for BTL ear speaker)
				01	VREF (for capless headphone drive)
				10	mono mix of both headphone channels (for single-ended ear speaker)
				11	inverse of MONOOUT (for differential mono output)
	7	ZC	0	Zero Cross Enable 0: Change gain immediately 1: Change gain only on zero crossings, or after time-out	
	5:0	OUT3 VOL	000000 (0dB)	OUT3 Volume 000000: 0dB (maximum) 000001: -1.5dB … (1.5dB steps) 011111: -46.5dB 1xxxxx: -46.5dB	

Table 16 OUT3 Control

LOUDSPEAKER OUTPUTS – LOUT2 AND ROUT2

The LOUT2 and ROUT2 outputs are designed to differentially drive an 8Ω mono speaker. They can also be used as a stereo line-out or headphone output.

For speaker drive, the LOUT2 signal must be inverted (INV = 1), so that the left and right channel are added up in the speaker [R–(-L) = R+L].

REGISTER ADDRESS	BIT	LABEL	DEFAULT	DESCRIPTION
02h LOUT2/ROUT2 Volume	15	MUTE	1	Mute LOUT2 and ROUT2 1: Mute (OFF) 0: No Mute (ON)
	13:8	LOUT2VOL	00000 (0dB)	LOUT2 Volume 000000: 0dB (maximum) 000001: -1.5dB … (1.5dB steps) 011111: -46.5dB 1xxxxx: -46.5dB
	7	ZC	0	Zero Cross Enable 0: Change gain immediately 1: Change gain only on zero crossings, or after time-out
	6	INV	0	LOUT2 Invert 0 = No Inversion (0° phase shift) 1 = Signal inverted (180° phase shift)
	5:0	ROUT2VOL	00000 (0dB)	ROUT2 Volume Similar to LOUT2VOL
16h	8	SRC	0	Source of LOUT2/ROUT2 signals 0: speaker mixer (for BTL speaker) 1: headphone mixer (for stereo output)

Table 17 LOUT2 / ROUT2 Control

Note:

1. For BTL speaker drive, it is recommended that LOUT2VOL = ROUT2VOL.

PHONE OUTPUT (MONOOUT)

The MONOOUT output (pin 33) is intended for connection to the TX side of a wireless chipset. The signal is generated in a dedicated mono mixer; it is not necessarily a mono mix of the stereo outputs HPOUTL/R or LOUT2/ROUT2 (see "Audio Mixers" section).

The MONOOUT volume can be controlled by writing to register 06h. When MONOOUT is not used, the output buffer can be disabled to save power (see "Power Management" section). The MONOOUT pin remains at the same DC level (the reference voltage on the VREF pin), so that no click noise is produced when muting or un-muting.

REGISTER ADDRESS	BIT	LABEL	DEFAULT	DESCRIPTION
06h MONOOUT Volume	15	MUTE	1	Mute MONOOUT 1: Mute 0: No Mute
	7	ZC	0	Zero Cross Enable 0: Change gain immediately 1: Change gain only on zero crossings, or after time-out
	4:0	MONOOUT VOL	00000 (0dB)	MONOOUT Volume 00000: 0dB (maximum) 00001: -1.5dB … (1.5dB steps) 11111: -46.5dB

Table 18 MONOOUT Control

THERMAL CUTOUT

The speaker and headphone outputs can drive very large currents. To protect the WM9711L from becoming too hot, a thermal cutout has been built in. If the chip temperature reaches approximately 150°C, and the ENT bit is set, the WM9711L deasserts GPIO bit 11 in register 54h, a virtual GPIO that can be set up to generate an interrupt to the CPU (see "GPIO and Interrupt Control" section).

REGISTER ADDRESS	BIT	LABEL	DEFAULT	DESCRIPTION
5Ch	2	ENT	0	Enable thermal cutout 0: Disabled 1: Enabled
54h	11	TI	1	Thermal cutout (virtual GPIO) 1: Temperature below 150°C 0: Temperature above 150°C See also "GPIO and Interrupt Control" section.

Table 19 Thermal Cutout Control

JACK INSERTION AND AUTO-SWITCHING

In a phone application, a BTL ear speaker may be connected across OUT3 and HPOUTL, and a stereo headphone on HPOUTL and HPOUTR. Typically, only one of these two output devices is used at any given time: when no headphone is plugged in, the BTL ear speaker is active, otherwise the headphone is used.

The presence of a headphone can be detected using GPIO1 (pin 44) and an external pull-up resistor (see "Applications Information" section for a circuit diagram). When the jack is inserted GPIO1 is pulled low by a switch on the socket. When the jack is removed GPIO1 is pulled high by a resistor. If the JIEN bit is set, the WM9711L automatically switches between headphone and ear speaker, as shown below.

REGISTER ADDRESS	BIT	LABEL	DEFAULT	DESCRIPTION
58h Additional Functional Control	12	JIEN	0	Jack Insert Enable – Takes output of GPIO1 logic
	11	FRC	0	Force Ear Speaker Mode See table below

Table 20 Jack Insertion / Auto-Switching (1)

JIEN	FRC	GPIO1	MODE DESCRIPTION	OUT3 STATE	HPOUTL VOLUME	HPOUTR VOLUME	OUT3 VOLUME	HPOUTL/ HPOUTR STATE
0	0	X	Jack insert detection disabled (headphone and ear speaker can be used at the same time)	Set by reg. 24h and 26h	Set by reg. 04h	Set by reg. 04h	Set by reg. 16h	Set by reg. 24h and 26h
1	0	0	Jack insert detection enabled, headphone plugged in	Disabled				
1	X	1	Jack insert detection enabled, headphone not plugged in	Set by reg. 24h and 26h	Set by reg. 16h			
0	1	X	Force Ear Speaker Mode					
1	1	X	Invalid; do not use this setting					

Table 21 Jack Insertion / Auto-Switching (2)

DIGITAL AUDIO (SPDIF) OUTPUT

The WM9711L supports the SPDIF standard using pin 47 as its output. Note that pin 47 can also be used as a GPIO pin. The GE5 bit (register 56h, bit 5) selects between GPIO and SPDIF functionality (see "GPIO and Interrupt control" section).

Register 3Ah is a read/write register that controls SPDIF functionality and manages bit fields propagated as channel status (or sub-frame in the V case). With the exception of V, this register should only be written to when the SPDIF transmitter is disabled (SPDIF bit in register 2Ah is '0'). Once the desired values have been written to this register, the contents should be read back to ensure that the sample rate in particular is supported, then SPDIF validity bit SPCV in register 2Ah should be read to ensure the desired configuration is valid. Only then should the SPDIF enable bit in register 2Ah be set. This ensures that control and status information start up correctly at the beginning of SPDIF transmission.

REGISTER ADDRESS	BIT	LABEL	DEFAULT	DESCRIPTION
2Ah Extended Audio	10	SPCV	0	SPDIF validity bit (read-only)
	5:4	SPSA	00	SPDIF slot assignment (ADCO = 0) 00: Slots 3, 4 01: Slots 6, 9 10: Slots 7, 8 11: Slots 10, 11
	2	SEN	0	SPDIF output enable 1 = enabled, 0 = disabled
3Ah SPDIF Control Register	15	V	0	Validity bit; '0' indicates frame valid, '1' indicates frame not valid
	14	DRS	0	Double rate SPDIF support; not supported by WM9705 therefore fixed '0'
	13:12	SPSR	10	SPDIF sample rate; WM9705 supports only 48kHz = '10'. This value is fixed.
	11	L	0	Generation level; programmed as required by user
	10:4	CC	0000000	Category code; programmed as required by user
	3	PRE	0	Pre-emphasis; '0' indicates not pre-emphasis, '1' indicates 50/15us pre-emphasis
	2	COPY	0	Copyright; '0' indicates copyright is not asserted, '1' indicates copyright
	1	AUDIB	TBD	Non-audio; '0' indicates data is PCM, '1' indicates non-PCM format (eg DD or DTS)
	0	PRO	TBD	Professional; '0' indicates consumer, '1' indicates professional
5Ch Additional Function Control	4	ADCO	0	Source of SPDIF data 0: SPDIF data comes from SDATAOUT (pin 5), slot selected by SPSA 1: SPDIF data comes from audio ADC

Table 22 SPDIF Output Control

AUDIO MIXERS

MIXER OVERVIEW

The WM9711L has three separate low-power audio mixers to cover all audio functions required by smartphones, PDAs and handheld computers. The diagram below shows the routing of the analogue audio signals into the mixers. The numbers at the mixer inputs refer to the control register bits that control the volume and muting for that particular signal.

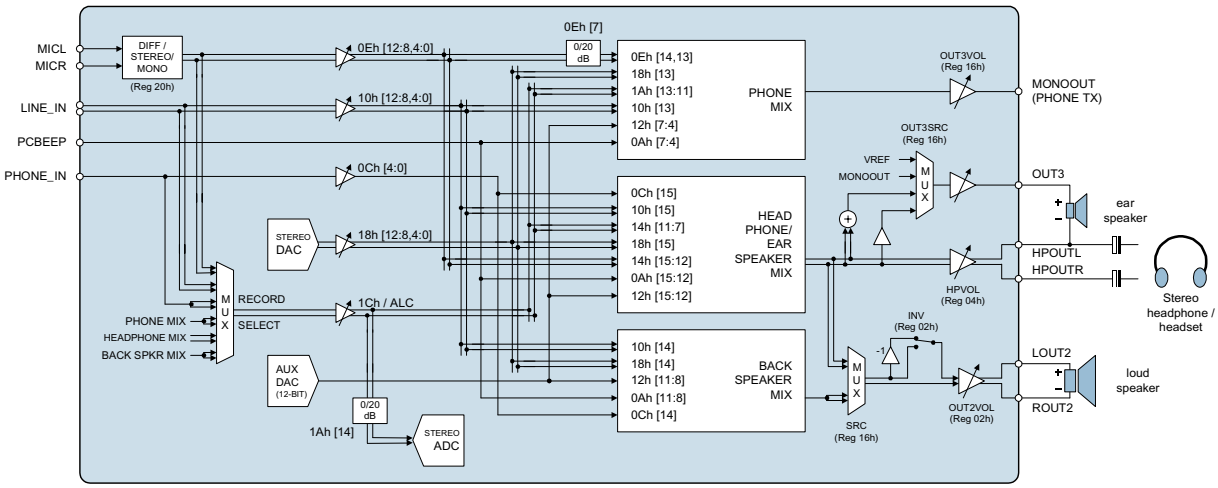

Figure 4 Audio Mixer Overview

HEADPHONE MIXER

The headphone mixer drives the HPOUTL and HPOUTR outputs. It also drives OUT3, if this pin is connected to an ear speaker (phone receiver). The following signals can be mixed into the headphone path:

- PHONE (controlled by register 0Ch, see “Audio Inputs”)
- LINE_IN (controlled by register 10h, see “Audio Inputs”)
- the output of the Record PGA (see “Audio ADC”, “Record Gain”)
- the stereo DAC signal (controlled by register 18h, see “Audio DACs”)
- the MIC signal (controlled by register 0Eh, see “Audio Inputs”)
- PC_BEEP (controlled by register 0Ah, see “Audio Inputs”)
- the AUXDAC signal (controlled by register 12h, see “Auxiliary DAC”)

In a typical smartphone application, the headphone signal is a mix of PHONE and sidetone (for phone calls) and the stereo DAC signal (for music playback).

SPEAKER MIXER

The speaker mixer drives the LOUT2 and ROUT2 output. The following signals can be mixed into the speaker path:

- PHONE (controlled by register 0Ch, see “Audio Inputs”)
- LINE_IN (controlled by register 10h, see “Audio Inputs”)
- the stereo DAC signal (controlled by register 18h, see “Audio DACs”)
- PC_BEEP (controlled by register 0Ah, see “Audio Inputs”)
- the AUXDAC signal (controlled by register 12h, see “Auxiliary DAC”)

In a typical smartphone application, the speaker signal is a mix of AUXDAC (for system alerts or ring tone playback), PHONE (for speakerphone function), and PC_BEEP (for externally generated ring tones).

MONO MIXER

The mono mixer drives the MONOOUT pin. The following signals can be mixed into MONOOUT:

- LINE_IN (controlled by register 10h, see “Audio Inputs”)
- the output of the Record PGA (see “Audio ADC”, “Record Gain”)
- the stereo DAC signal (controlled by register 18h, see “Audio DACs”)
- the MIC signal (controlled by register 10h, see “Audio Inputs”)
- PC_BEEP (controlled by register 0Ah, see “Audio Inputs”)
- the AUXDAC signal (controlled by register 12h, see “Auxiliary DAC”)

In a typical smartphone application, the MONOOUT signal is a mix of the amplified microphone signal (possibly with Automatic Gain Control) and (if enabled) an audio playback signal from the stereo DAC or the auxiliary DAC.

SIDE TONE CONTROL

The side tone path is into the headphone mixer and is either from the MIC or ALC path (with no 20dB boost)

REGISTER ADDRESS	BIT	LABEL	DEFAULT	DESCRIPTION
14h Sidetone Control	15	STM	1	MIC side tone select 0: selected 1 : not selected (path muted)
	14:12	STVOL	010 (0dB)	MIC Sidetone volume 000 : +6dB (max.) 001: +3dB … (3dB steps) 111 : -15dB (min.)
	11:10	ALCM	11	ALC side tone select 11: mute 10: mono – left 01: mono – right 00: stereo
	9:7	ALCVOL	010 (0dB)	ALC Sidetone volume Similar to STVOL

Table 23 Side Tone Control

VARIABLE RATE AUDIO / SAMPLE RATE CONVERSION

By using an AC'97 Rev2.2 compliant audio interface, the WM9711L can record and playback at all commonly used audio sample rates, and offer full split-rate support (i.e. the DAC, ADC and AUXDAC sample rates are completely independent of each other – any combination is possible).

The default sample rate is 48kHz. If the VRA bit (register 20h) is set and the appropriate block is enabled, then other sample rates can be selected by writing to registers 2Ch, 32h and 2Eh. The AC-Link continues to run at 48k frames per second irrespective of the sample rate selected. However, if the sample rate is less than 48kHz, then some frames do not carry an audio sample.

REGISTER ADDRESS	BIT	LABEL	DEFAULT	DESCRIPTION
2Ah Extended Audio Stat/Ctrl	0	VRA	0 (OFF)	Variable Rate Audio 0: OFF (DAC and ADC run at 48kHz) 1: ON (sample rates determined by registers 2Ch, 2Eh and 32h)
2Ch Audio DAC Sample Rate	15:0	DACSR	BB80h (48kHz)	Audio DAC sample rate 1F40h: 8kHz 2B11h: 11.025kHz 2EE0h: 12kHz 3E80h: 16kHz 5622h: 22.05kHz 5DC0h: 24kHz 7D00h: 32kHz AC44h: 44.1kHz BB80h: 48kHz Any other value defaults to the nearest supported sample rate
32h Audio ADC Sample Rate	15:0	ADCSR	BB80h (48kHz)	Audio ADC sample rate similar to DACSR
2Eh AUXDAC Sample Rate	15:0	AUXDA CSR	BB80h (48kHz)	AUXDAC sample rate similar to DACSR

Table 24 Audio Sample Rate Control

BATTERY ALARM

PRINCIPLE OF OPERATION

The WM9711L has two on-chip comparators that can be used to implement a battery alarm function, or other functions such as a window comparator. Each comparator has one of its inputs tied to any one of three device pins and the other tied to a voltage reference. The voltage reference can be either internally generated (VREF = AVDD/2) or externally connected on CREF (pin 12).

The comparator output signals are passed to the GPIO logic block (see "GPIO and Interrupt Control" section), where they can be used to send an interrupt to the CPU via the AC-Link or via the IRQ pin, and / or to wake up the WM9711L from sleep mode. COMP1 (pin 29) corresponds to GPIO bit 15 and COMP2 (pin30) to bit 14.

REGISTER ADDRESS	BIT	LABEL	DEFAULT	DESCRIPTION
4Eh	15	CP1	1	COMP1 Polarity (see also "GPIO and Interrupt Control") 0: Alarm when COMP1 voltage is above VREF 1: Alarm when COMP1 voltage is below VREF
	14	CP2	1	COMP2 Polarity (see also "GPIO and Interrupt Control") 0: Alarm when COMP2 voltage is above VREF 1: Alarm when COMP2 voltage is below VREF
58h	15:13	COMP2 DEL	0	Low Battery Alarm Delay 000: No delay 001: 0.17s (2^{13} = 8192 AC-Link frames) 010: 0.34s (2^{14} = 16384 AC-Link frames) 011: 0.68s (2^{15} = 32768 AC-Link frames) 100: 1.4s (2^{16} = 65536 AC-Link frames) 101: 2.7s (2^{17} = 131072 AC-Link frames) 110: 5.5s (2^{18} = 262144 AC-Link frames) 111: 10.9s (2^{19} = 524288 AC-Link frames)

Table 25 Comparator Control

REGISTER ADDRESS	BIT	LABEL	DEFAULT	DESCRIPTION	
5Ch Additional Analogue Functions	14	C1REF	0	Comparator 1 Reference Voltage	
				0	VREF = AVDD/2
				1	WIPER/AUX4 (pin 12)
	13:12	C1SRC	00	Comparator 1 Signal Source	
				00	AVDD/2 when C1REF='1'. Otherwise comparator 1 is powered down
				01	COMP1/AUX1 (pin 29)
				10	COMP2/AUX2 (pin 30)
				11	BMON/AUX3 (pin 31)
	11	C2REF	0	Comparator 2 Reference Voltage	
				0	VREF = AVDD/2
				1	WIPER/AUX4 (pin 12)
	10:9	C2SRC	00	Comparator 2 Signal Source	
				00	AVDD/2 when C2REF='1'. Otherwise comparator 2 is powered down
				01	COMP1/AUX1 (pin 29)
				10	COMP2/AUX2 (pin 30)
				11	BMON/AUX3 (pin 31)

Table 26 Comparator Reference and Source Control

COMP2 DELAY FUNCTION

COMP2 has an optional delay function for use when the input signal is noisy. When COMP2 triggers and the delay is enabled (i.e. COMP2DEL is non-zero), then GPIO bit 14 does not change state immediately, and no interrupt is generated. Instead, the WM9711L starts a delay timer and checks COMP2 again after the delay time has passed. If COMP2 is still active, then the GPIO bit is set and an interrupt may be generated (depending on the state of the GW14 bit). If COMP2 is no longer active, the GPIO bit is not set, i.e. all register bits are as if COMP2 had never triggered.

Note: If COMP2 triggers while the WM9711L is in sleep mode, and the delay is enabled, then the device starts the on-chip crystal oscillator in order to count the time delay.

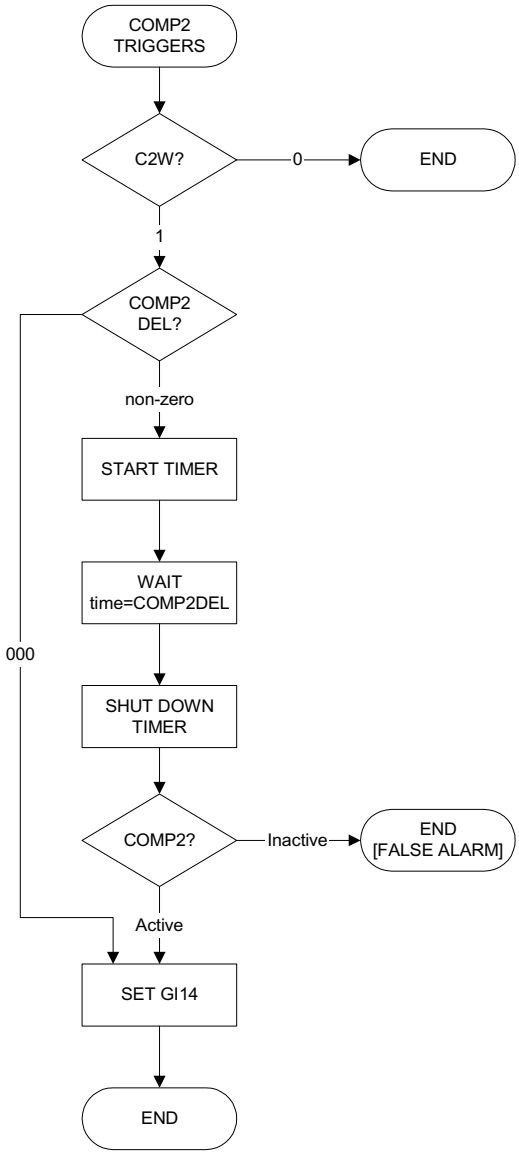

Figure 5 COMP2 Delay Flow Chart

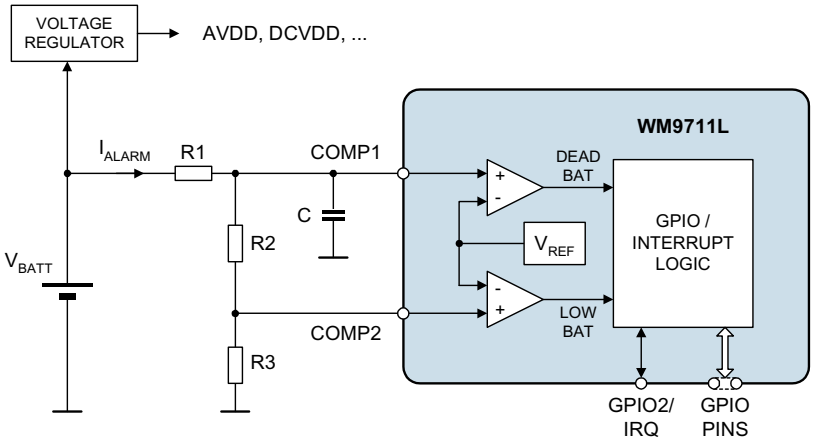

Figure 6 Battery Alarm Example Schematic

The typical schematic for a dual threshold battery alarm is shown above. This alarm has two thresholds, "dead battery" (COMP1) and "low battery" (COMP2). R1, R2 and R3 set the threshold voltages. Their values can be up to about 1MΩ in order to keep the battery current [$I_{ALARM} = V_{BATT}$ / (R1+R2+R3)] to a minimum (higher resistor values may affect the accuracy of the system as leakage currents into the input pins become significant).

- Dead battery alarm: COMP1 triggers when V_{BATT} < VREF × (R1+R2+R3) / (R2+R3)

A dead battery alarm is the highest priority of interrupt in the system. It should immediately save all unsaved data and shut down the system. The GP15, GS15 and GW15 bits must be set to generate this interrupt.

- Low battery alarm: COMP2 triggers when V_{BATT} < VREF × (R1+R2+R3) / R3

A low battery alarm has a lower priority than a dead battery alarm. Since the threshold voltage is higher than for a dead battery alarm, there is enough power left in the battery to give the user a warning and/or shut down "gracefully". When V_{BATT} gets close to the low battery threshold, spurious alarms are filtered out by the COMP2 delay function.

The purpose of the capacitor C is to remove from the comparator inputs any high frequency noise or glitches that may be present on the battery (for example, noise generated by a charge pump). It forms a low pass filter with R1, R2 and R3.

- Low pass cutoff f_c [Hz] = 1/ (2π C × (R1 || (R2+R3)))

Provided that the cutoff frequency is several orders of magnitude lower than the noise frequency f_n, this simple circuit can achieve excellent noise rejection.

- Noise rejection [dB] = 20 log (f_n / f_c)

GPIO AND INTERRUPT CONTROL

The WM9711L has five GPIO pins that operate as defined in the AC'97 Revision 2.2 specification. Each GPIO pin can be set up as an input or as an output, and has corresponding bits in register 54h and in slot 12. The state of a GPIO output is determined by sending data through slot 12 of outgoing frames (SDATAOUT). Data can be returned from a GPIO input by reading the register bit, or examining slot 12 of incoming frames (SDATAIN). GPIO inputs can be made sticky, and can be programmed to generate and interrupt, transmitted either through the AC-Link or through a dedicated, level-mode interrupt pin (GPIO2/IRQ, pin 45).

GPIO pins 2 to 5 are multi-purpose pins that can also be used for other (non-GPIO) purposes, e.g. as a SPDIF output or to signal pen-down. This is controlled by register 56h.

Independently of the GPIO pins, the WM9711L also has three virtual GPIOs. These are signals from inside the WM9711L, which are treated as if they were GPIO input signals. From a software perspective, virtual GPIOs are the same as GPIO pins, but they cannot be set up as outputs, and are not tied to an actual pin. This allows for simple, uniform processing of different types of signals that may generate interrupts (e.g. pen down, battery warnings, jack insertion, high-temperature warning, or GPIO signals).

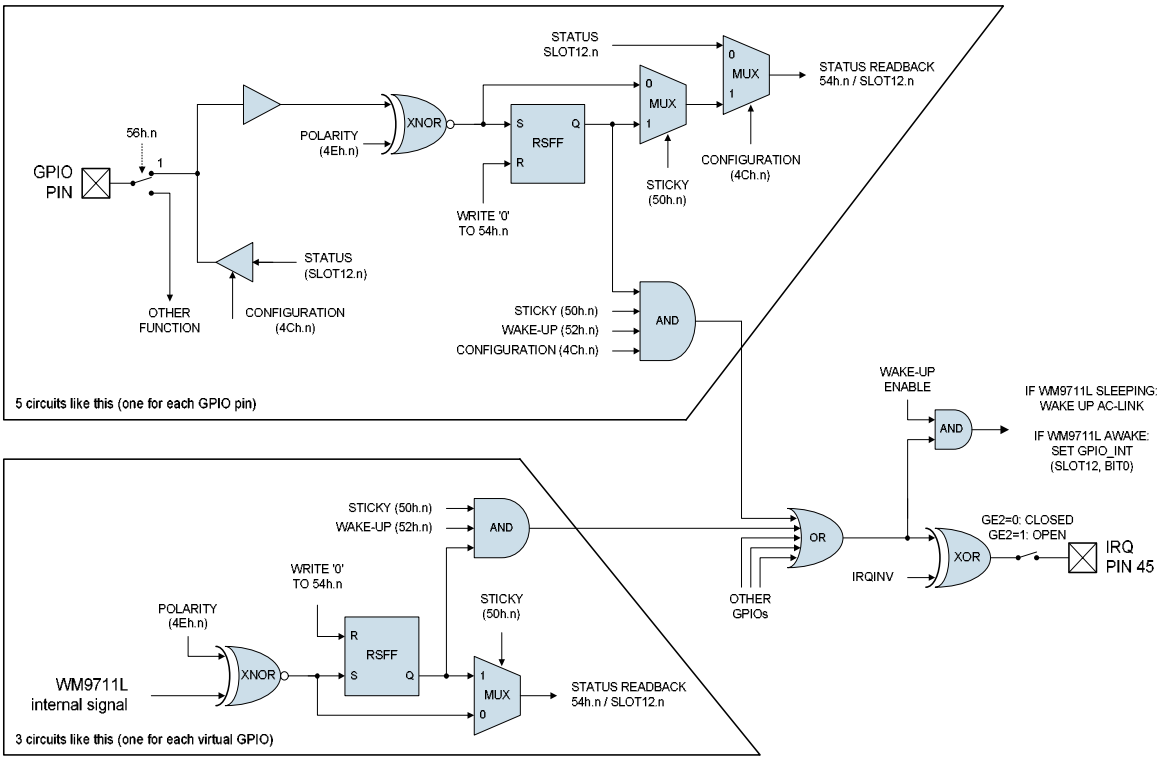

Figure 7 GPIO logic

GPIO BIT	SLOT1 2 BIT	TYPE	PIN NO.	DESCRIPTION
1	5	GPIO Pin	44	GPIO1
2	6	GPIO Pin	45	GPIO2 / IRQ enabled only when pin not used as IRQ
3	7	GPIO Pin	46	GPIO3
4	8	GPIO Pin	47	GPIO4
5	9	GPIO Pin	48	GPIO5 / SPDIF_OUT enabled only when pin not used as SPDIF_OUT
6-10	N/A	Unused	-	GPIO Logic not implemented for these bits
11	15	Virtual GPIO	- [Thermal Cutout]	Internal thermal cutout signal, indicates when internal temperature reaches approximately 150°C (see “Thermal Sensor”)
12-13	N/A	Unused	-	GPIO Logic not implemented for these bits
14	18	Virtual GPIO	- [COMP2]	Internal COMP2 output (Low Battery Alarm) enabled only when COMP2 is on
15	19	Virtual GPIO	- [COMP1]	Internal COMP1 output (Dead Battery Alarm) enabled only when COMP1 is on

Table 27 GPIO Bits and Pins

The properties of the GPIOs are controlled through registers 4Ch to 52h, as shown below.

REGISTER ADDRESS	BIT	LABEL	DEFAULT	DESCRIPTION
4Ch	n	GCn	1	GPIO Pin Configuration 0: Output 1: Input GC11-15 are always '1' Unused bits GC6-GC10 are always '0'
4Eh	n	GPn	1	GPIO Pin Polarity / Type 0: Active Low 1: Active High [GIn = pin level XNOR GPn)
				Unused bits GP6-GP10, GP12 and GP13 are always '1'
50h	n	GSn	0	GPIO Pin Sticky 1: Sticky 0: Not Sticky Unused bits GS6-GS10, GS12 and GS13 are always '0'
52h	n	GWn	0	GPIO Pin Wake-up 1: Wake Up (generate interrupts from this pin) 0: No wake-up (no interrupts generated) Unused bits GW6-GW10, GW12 and GW13 are always '0'
54h	n	GIn	N/A	GPIO Pin Status Read: Returns status of each GPIO pin Write: Sets output pin high or low. (Writing '0' clears sticky bit) Unused bits GI6-GI10, GI12 and GI13 are always '0'

Table 28 GPIO Control

The following procedure is recommended for handling interrupts:

When the controller receives an interrupt, check register 54h. For each GPIO bit in descending order of priority, check if the bit is '1'. If yes, execute corresponding interrupt routine, then write '0' to corresponding bit in 54h. If no, continue to next lower priority GPIO. After all GPIOs have been checked, check if interrupt still present or no. If yes, repeat procedure. If no, then jump back to process that ran before the interrupt.

If the system CPU cannot execute such an interrupt routine, it may be preferable to switch internal signals (such as PENDOWN) directly onto the GPIO pins. However, in this case the interrupt signals cannot be made sticky, and more GPIO pins are tied up both on the WM9711L and on the CPU.

REGISTER ADDRESS	BIT	LABEL	DEFAULT	DESCRIPTION
56h GPIO pins function select	2	GE2	1	GPIO2 / IRQ output select 0: Pin 45 disconnected from GPIO logic set 4Ch, bit 2 to '0' to output IRQ signal 1: Pin 45 connected to GPIO logic (IRQ disabled)
	5	GE5	1	GPIO5 / SPDIF output select 0: Pin 48 = SPDIF (disconnected from GPIO logic) set 4Ch, bit 5 to '0' to output SPDIF signal 1: Pin 48 connected to GPIO logic (SPDIF disabled)

Table 29 Using GPIO Pins for Non-GPIO Functions

REGISTER ADDRESS	BIT	LABEL	DEFAULT	DESCRIPTION
58h Additional Functional Control	0	IRQ INV	0	Inverts the IRQ signal (pin 45) 0: IRQ signal not inverted 1: IRQ signal inverted
	1	WAKEEN	0	Enables GPIO wake-up 0: Disabled 1: Enabled

Table 30 Additional Functionality for GPIO Pins

POWER MANAGEMENT

The WM9711L includes the standard power down control register defined by the AC'97 specification (register 26h). Additionally, it also allows more specific control over the individual blocks of the device through register 24h. Each particular circuit block is ON when both the relevant bit in register 26h and the relevant bit in register 24h are set to '0'.

REGISTER ADDRESS	BIT	LABEL	DEFAULT		DESCRIPTION
			NORMAL	PIN 47 'HI' DURING RESET	
26h Powerdown/ Status register	14	PR6	0 (ON)	1 (OFF)	Disables HPOUTL, HPOUTR and OUT3 Buffer
	13	PR5	0 (ON)	1 (OFF)	Disables internal clock
	12	PR4	0 (ON)	1 (OFF)	Disables AC-link interface (external clock off)
	11	PR3	0 (ON)	1 (OFF)	Disables VREF, analogue mixers and outputs
	10	PR2	0 (ON)	1 (OFF)	Disables analogue mixers, LOUT2, ROUT2 (but not VREF)
	9	PR1	0 (ON)	1 (OFF)	Disables stereo DAC
	8	PR0	0 (ON)	1 (OFF)	Disables audio ADCs and input Mux
	3	REF	1	0	Read-only bit, indicates VREF is ready (inverse of PR2)
	2	ANL	1	0	Read-only bit, indicates analogue mixers are ready (inverse of PR3)
	1	DAC	1	0	Read-only bit, indicates audio DACs are ready (inverse of PR1)
	0	ADC	1	0	Read-only bit, indicates audio ADCs are ready (inverse of PR0)

Table 31 Powerdown and Status Register (Conforms to AC'97 Rev 2.2)

As can be seen from the table above, most blocks are 'ON' by default. However, if pin 47 (GPIO4/ADA/MASK) is held high during reset, the WM9711L starts up with all blocks powered down by default, saving power. This is achieved by connecting a pull-up resistor (e.g. 100kΩ) from pin 47 to DBVDD. Note that the state of pin 47 during reset only affects register 26h.

REGISTER ADDRESS	BIT	LABEL	DEFAULT	DESCRIPTION
24h Additional power down control	15	PD15	0 (ON)	Disables Crystal Oscillator
	14	PD14	0 (ON)	Disables left audio DAC
	13	PD13	0 (ON)	Disables right audio DAC
	12	PD12	0 (ON)	Disables left audio ADC
	11	PD11	0 (ON)	Disables right audio ADC
	10	PD10	0 (ON)	Disables MICBIAS
	9	PD9	0 (ON)	Disables left headphone mixer
	8	PD8	0 (ON)	Disables right headphone mixer
	7	PD7	0 (ON)	Disables speaker mixer
	6	PD6	0 (ON)	Disables MONO_OUT buffer (pin 33) and phone mixer
	5	PD5	0 (ON)	Disables OUT3 buffer (pin 37)
	4	PD4	0 (ON)	Disables headphone buffers (HPOUTL/R)
	3	PD3	0 (ON)	Disables speaker outputs (LOUT2, ROUT2)
	2	PD2	0 (ON)	Disables Line Input PGA (left and right) *
	1	PD1	0 (ON)	Disables Phone Input PGA *
	0	PD0	0 (ON)	Disables Mic Input PGA (left and right) *
Note: When analogue inputs or outputs are disabled, they are internally connected to VREF through a large resistor (VREF=AVDD/2 except in OFF mode, when VREF itself is disabled). This maintains the potential at that node and helps to eliminate pops when the pins are re-enabled.				

Table 32 Extended Power Down Register (Additional to AC'97 Rev 2.2)

Note:

*When disabling a PGA, always ensure that it is muted first.

ADDITIONAL POWER MANAGEMENT:

- AUXDAC: see "Auxiliary DAC" section. AUXDAC is OFF by default.

SLEEP MODE

Whenever the PR4 bit (reg. 26h) is set, the AC-Link interface is disabled, and the WM9711L is in sleep mode. There is in fact a very large number of different sleep modes, depending on the other control bits. For example, the low-power standby mode described below is a sleep mode. It is desirable to use sleep modes whenever possible, as this will save power. The following functions do not require a clock and can therefore operate in sleep mode:

- Analogue-to-analogue audio (DACs and ADCs unused), e.g. phone call mode
- GPIO and interrupts
- Battery alarm / analogue comparators

The WM9711L can awake from sleep mode as a result of

- A warm reset on the AC-Link (according to the AC'97 specification)
- A signal on a GPIO pin (if the pin is configured as an input, with wake-up enabled – see "GPIO and Interrupt Control" section)
- A virtual GPIO event such as battery alarm, thermal sensor, etc. (see "GPIO and Interrupt Control" section)

LOW POWER STANDBY MODE

If all the bits in registers 26h and 24h are set, then the WM9711L is in low-power standby mode and consumes very little current. A 1MΩ resistor string remains connected across AVDD to generate VREF. This is necessary if the on-chip analogue comparators are used (see "Battery Alarm" section), and helps shorten the delay between wake-up and playback readiness. If VREF is not required, the 1MΩ resistor string can be disabled by setting the SVD bit, reducing current consumption further.

REGISTER ADDRESS	BIT	LABEL	DEFAULT	DESCRIPTION
58h	10	SVD	0	VREF Disable 0: VREF enabled using 1MΩ string (low-power standby mode) 1 : VREF disabled, 1MΩ string disconnected (OFF mode)

Table 33 Disabling VREF (for lowest possible power consumption)

SAVING POWER AT LOW SUPPLY VOLTAGES

The analogue supplies to the WM9711L can run from 1.8V to 3.6V. By default, all analogue circuitry on the IC is optimized to run at 3.3V. This set-up is also good for all other supply voltages down to 1.8V. However, at lower voltages, it is possible to save power by reducing the internal bias currents used in the analogue circuitry. This is controlled as shown below.

REGISTER ADDRESS	BIT	LABEL	DEFAULT	DESCRIPTION
5Ch	6:5	V[1:0]	11	Analogue Bias optimization 11 : Lowest bias current, optimized for 1.8V 10 : Low bias current, optimized for 2.5V 01, 00 : Default bias current, optimized for 3.3V

Table 34 Analogue Bias Selection

AC97 DATA AND CONTROL INTERFACE

INTERFACE PROTOCOL

The WM9711Lhas a single AC'97 interface for both data transfer and control. The AC-Link uses 5 wires:

- SDATAIN (pin 8) carries data from the WM9711L to the controller
- SDATAOUT (pin 5) carries data from the controller to the WM9711L
- BITCLK (pin 6) is a clock, normally generated by the WM9711L crystal oscillator and supplied to the controller. However, BITCLK can also be passed to the WM9711L from an off-chip generator.
- SYNC is a synchronization signal generated by the controller and passed to the WM9711L
- RESETB resets the WM9711L to its default state

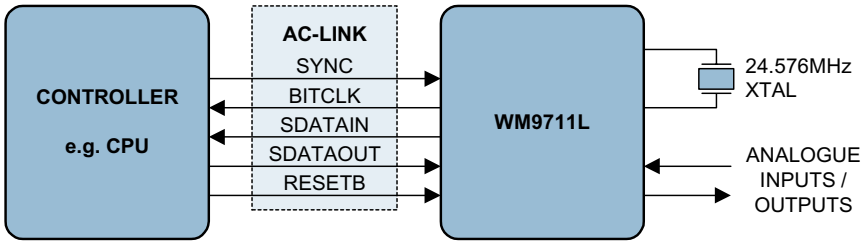

Figure 8 AC-Link Interface (typical case with BITCLK generated by the AC97 codec)

The SDATAIN and SDATAOUT signals each carry 13 time-division multiplexed dat

a streams (slots 0 to 12). A complete sequence of slots 0 to 12 is referred to as an AC-Link frame, and contains a total of 256 bits. The frame rate is 48kHz. This makes it possible to simultaneously transmit and receive multiple data streams (e.g. audio in, audio out, AUXDAC, GPIO, control) at sample rates up to 48kHz.

Detailed information can be found in the AC'97 (Revision 2.2) specification, which can be obtained at www.intel.com/labs/media/audio/

Note:

SDATAOUT and SYNC must be held low for when RESETB is applied. These signals must be held low for the entire duration of the RESETB pulse and especially during the low-to-high transition of RESETB. If either is set high during reset the AC'97 device may enter test modes. Information relating to this operation is available in the AC'97 specification or in Wolfson applications note WAN-0104 available at www.wolfsonmirco.com.

INTERFACE TIMING

Test Characteristics:

DBVDD = 3.3V, DCVDD = 3.3V, DGND1 = DGND2 = 0V, T_A = -25°C to +85°C, unless otherwise stated.

CLOCK SPECIFICATIONS

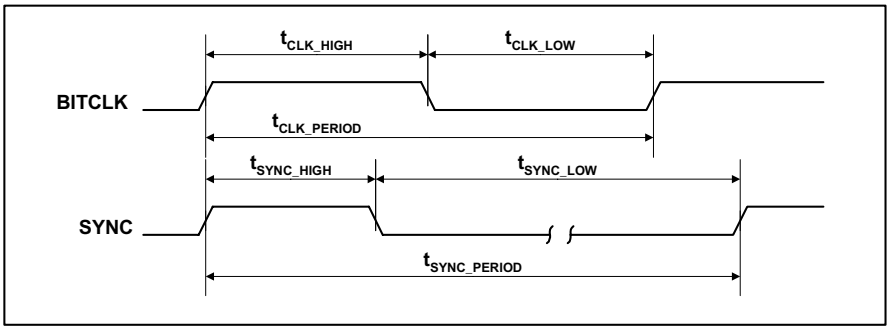

Figure 9 Clock Specifications (50pF External Load)

PARAMETER	SYMBOL	MIN	TYP	MAX	UNIT
BITCLK frequency			12.288		MHz
BITCLK period	t_{CLK_PERIOD}		81.4		ns
BITCLK output jitter				750	ps
BITCLK high pulse width (Note 1)	t_{CLK_HIGH}	36	40.7	45	ns
BITCLK low pulse width (Note 1)	t_{CLK_LOW}	36	40.7	45	ns
SYNC frequency			48		kHz
SYNC period	t_{SYNC_PERIOD}		20.8		µs
SYNC high pulse width	t_{SYNC_HIGH}		1.3		µs
SYNC low pulse width	t_{SYNC_LOW}		19.5		µs

Note:

1. Worst case duty cycle restricted to 45/55

DATA SETUP AND HOLD

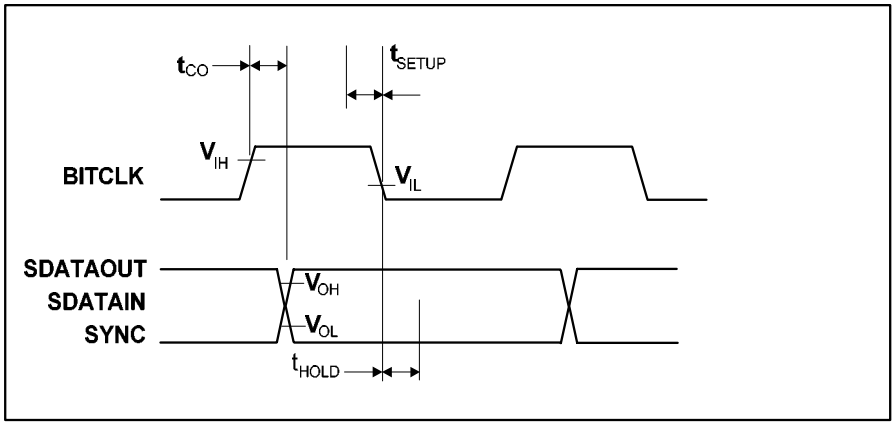

Figure 10 Data Setup and Hold (50pF External Load)

Note:

1. Setup and hold times for SDATAIN are with respect to the AC'97 controller, not the WM9711L.

PARAMETER	SYMBOL	MIN	TYP	MAX	UNIT
Setup to falling edge of BITCLK	t_{SETUP}	10			ns
Hold from falling edge of BITCLK	t_{HOLD}	10			ns
Output valid delay from rising edge of BITCLK	t_{CO}			15	ns

SIGNAL RISE AND FALL TIMES

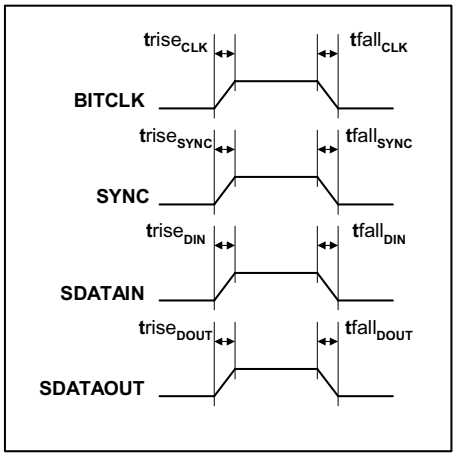

Figure 11 Signal Rise and Fall Times (50pF External Load)

PARAMETER	SYMBOL	MIN	TYP	MAX	UNIT
BITCLK rise time	$trise_{CLK}$	2		6	ns
BITCLK fall time	$tfall_{CLK}$	2		6	ns
SYNC rise time	$trise_{SYNC}$	2		6	ns
SYNC fall time	$tfall_{SYNC}$	2		6	ns
SDATAIN rise time	$trise_{DIN}$	2		6	ns
SDATAIN fall time	$tfall_{DIN}$	2		6	ns
SDATAOUT rise time	$trise_{DOUT}$	2		6	ns
SDATAOUT fall time	$tfall_{DOUT}$	2		6	ns

AC-LINK POWERDOWN

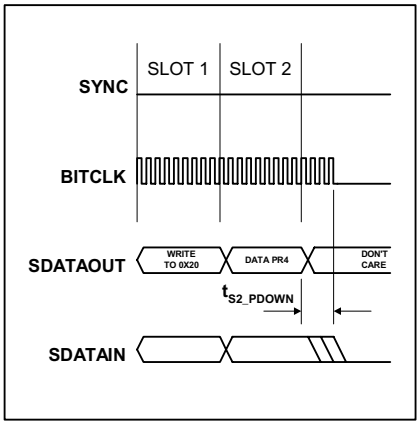

Figure 12 AC-Link Powerdown Timing

AC-Link powerdown occurs when PR4 (register 26h, bit 12) is set (see "Power Management" section).

PARAMETER	SYMBOL	MIN	TYP	MAX	UNIT
End of Slot 2 to BITCLK and SDATAIN low	t_{S2_PDOWN}			1.0	µs

COLD RESET (ASYNCHRONOUS, RESETS REGISTER SETTINGS)

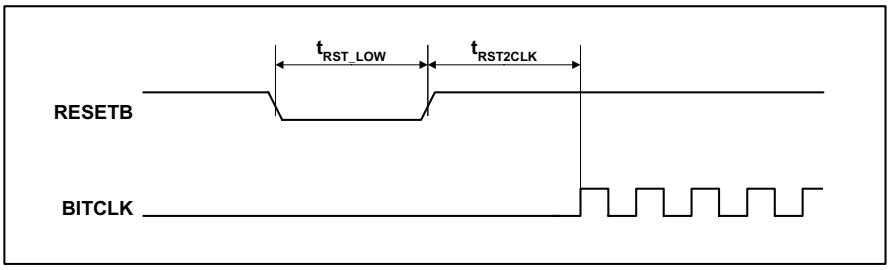

Figure 13 Cold Reset Timing

Note:

For correct operation SDATAOUT and SYNC must be held LOW for entire RESETB active low period otherwise the device may enter test mode. See AC'97 specification or Wolfson applications note WAN104 for more details.

PARAMETER	SYMBOL	MIN	TYP	MAX	UNIT
RESETB active low pulse width	t_{RST_LOW}	1.0			µs
RESETB inactive to BITCLK startup delay	$t_{RST2CLK}$	162.8			ns

WARM RESET (ASYNCHRONOUS, PRESERVES REGISTER SETTINGS)

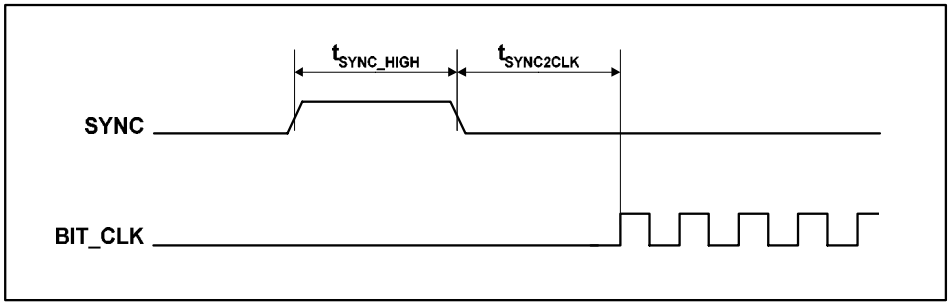

Figure 14 Warm Reset Timing

PARAMETER	SYMBOL	MIN	TYP	MAX	UNIT
SYNC active high pulse width	t_{SYNC_HIGH}		1.3		µs
SYNC inactive to BITCLK startup delay	$t_{RST2CLK}$	162.4			ns

REGISTER MAP

Note: Highlighted bits differ from the AC'97 specification (newly added for non-AC'97 function, or same bit used in a different way, or for another function)

Reg	Name	15	14	13	12	11	10	9	8	7	6	5	4	3	2	1	0	Default
00h	Reset	0	SE4	SE3	SE2	SE1	SE0	ID9	ID8	ID7	ID6	ID5	ID4	ID3	ID2	ID1	ID0	6174h
02h	LOUT2/ROUT2 Volume	MU	0	LOUT2 Volume						ZC	INV	ROUT2 Volume						8000h
04h	Headphone Volume	MU	0	HPOUTL Volume						ZC	0	HPOUTR Volume						8000h
06h	MONOOUT Volume	MU	0	0	0	0	0	0	0	ZC	0	0	MONOOUT Volume					8000h
08h	DAC Tone Control	BB	0	0	BC	BASS				0	DAT	0	TC	TRBL				0F0Fh
0Ah	PCBEEP Input	B2H	B2HVOL			B2S	B2SVOL			B2P	B2PVOL			0	0	0	0	AAA0h
0Ch	PHONE Volume	P2H	P2S	0	0	0	0	0	0	0	0	0	PHONEIN Volume					C008h
0Eh	MIC Volume	0	M12P	M22P	LMICVOL (Left Only)					20dB	MS		MICVOL (Mono /Right)					6808h
10h	LINEIN Volume	L2H	L2S	L2P	LINEINLVOL					0	0	0	LINEINRVOL					E808h
12h	AUXDAC Volume / Routing	A2H	A2HVOL			A2S	A2SVOL			A2P	A2PVOL			0	0	0	AXE	AAA0h
14h	Sidetone Volume	STM	STVOL			ALCM	ALCVOL				0	0	0	0	0	0	0	AD00h
16h	OUT3 Volume	MU	0	0	0	0	OUT3SRC		SRC	ZC	0	OUT3 Volume						8000h
18h	DAC Volume	D2H	D2S	D2P	Left DAC Volume					0	0	0	Right DAC Volume					E808h
1Ah	Record Select	0	BOOST	R2P		R2P BST	RECSL			0	0	0	0	0	RECSR			3000h
1Ch	Record Gain	RMU	GRL	(Extended)		RECVOLL				ZC	GRR	(Extended)		RECVOLR				8000h
20h	General Purpose	0	0	3DE	0	0	0	0	0	LB	0	0	0	0	0	0	0	0000h
22h	DAC 3D Control	0	0	0	0	0	0	0	0	0	0	3DLC	3DUC	3DDEPTH				0000h
24h	Powerdown	PD15	PD14	PD13	PD12	PD11	PD10	PD9	PD8	PD7	PD6	PD5	PD4	PD3	PD2	PD1	PD0	0000h
26h	Powerdown Ctrl/Stat	EAPD	PR6	PR5	PR4	PR3	PR2	PR1	PR0	0	0	0	0	REF	ANL	DAC	ADC	
	Default for reg. 26h - pin 47 "low"																	000Fh
	Default for reg. 26h - pin 47 "high" during reset (recommended for lowest power)																	FFF0h
28h	Extended Audio ID	ID1	ID0	0	0	REV1	REV0	AMAP	LDAC	SDAC	CDAC	0	0	VRM	SPDIF	DRA	VRA	0405h
2Ah	Ext'd Audio stst/ctrl	0	0	0	0	0	SPCV	0	0	0	0	SPSA		0	SEN	0	VRA	0410h
2Ch	Audio DACs Sample Rate	DACSR (Audio DACs Sample Rate)																BB80h
2Eh	AUXDAC Sample Rate	AUXDACSR (Auxiliary DAC Sample Rate)																BB80h
32h	Audio ADCs Sample Rate	ADCSR (Audio ADCs Sample Rate)																BB80h
3Ah	SPDIF control	V	DRS	SPSR		L	CC (Category Code)							PRE	COPY	AUD IB	PRO	2000h
4Ch	GPIO Pin Configuration	1	1	1	1	1	0	0	0	0	0	GC5	GC4	GC3	GC2	GC1	0	F83Eh
4Eh	GPIO Pin Polarity / Type	C1P	C2P	1	1	TP	1	1	1	1	1	GP5	GP4	GP3	GP2	GP1	1	FFFFh
50h	GPIO Pin Sticky	C1S	C2S	0	0	TS	0	0	0	0	0	GS5	GS4	GS3	GS2	GS1	0	0000h
52h	GPIO Pin Wake-Up	C1W	C2W	0	0	TW	0	0	0	0	0	GW5	GW4	GW3	GW2	GW1	0	0000h
54h	GPIO Pin Status	C1I	C2I	0	0	TI	0	0	0	0	0	GI5	GI4	GI3	GI2	GI1	0	GPIO pins
56h	GPIO Pin Assignment	COM1	COM2	1	1	TCO	0	0	0	0	0	GE5	1	1	GE2	1	0	F83Eh
58h	GPIO pin sharing / Additional Functions	COMP2DEL			JIEN	JIF	SVD	0	0	0	0	0	0	Die Revision		WAKE EN	IRQ INV	0008h
5Ah	Vendor Reserved	RESERVED FOR TEST																
5Ch	Add. Function Control	AMUTE	C1 REF	C2SRC		C2 REF	C2SRC		DS	AM EN	V (BIAS)		AD CO	HPF	ENT	ASS		0000h
5Eh	Vendor Reserved	RESERVED FOR TEST																
60h	ALC Control	ALCL (target level)				HLD (hold time)				DCY (decay time)				ATK (attack time)				B032h
62h	ALC / Noise Gate Control	ALCSEL		MAXGAIN			ZC TIMEOUT		ALC ZC	NG AT	0	NGG	NGTH (threshold)					3E00h
64h	AUXDAC input control	XSLE	AUXDACSLT			AUXDAC VAL												0000h
66h-7Ah	Vendor Reserved	RESERVED. DO NOT WRITE TO THESE REGISTERS																N/A
7Ch	Vendor ID1	ASCII character "W"								ASCII character "M"								574Dh
7Eh	Vendor ID2	ASCII character "L"								Number "12"								4C12h

Table 35 WM9711L Register Map

REGISTER BITS BY ADDRESS

Register 00h is a read-only register. Writing any value to this register resets all registers to their default, but does not change the contents of reg. 00h. Reading the register reveals information about the codec to the driver, as required by the AC'97 Specification, Revision 2.2

REG ADDR	BIT	LABEL	DEFAULT	DESCRIPTION	REFER TO
00h	14:10	SE [4:0]	11000	Indicates a codec from Wolfson Microelectronics	Intel's AC'97 Component Specification, Revision 2.2, page 50
	9:6	ID9:6	0101	Indicates 18 bits resolution for ADCs and DACs	
	5	ID5	1	Indicates that the WM9711L supports bass boost	
	4	ID4	1	Indicates that the WM9711L has a headphone output	
	3	ID3	0	Indicates that the WM9711L does not support simulated stereo	
	2	ID2	1	Indicates that the WM9711L supports bass and treble control	
	1	ID1	0	Indicates that the WM9711L does not support modem functions	
	0	ID0	0	Indicates that the WM9711L does not have a dedicated microphone ADC	

Register 02h controls the output pins LOUT2 and ROUT2.

REG ADDR	BIT	LABEL	DEFAULT	DESCRIPTION	REFER TO
02h	15	MU	1 (mute)	Mutes LOUT2 and ROUT2.	Analogue Audio Outputs
	13:8	LOUT2 VOL	000000 (0dB)	LOUT2 volume	
	7	ZC	0 (OFF)	Enables zero-cross detector	
	6	INV	0 (not inverted)	Inverts LOUT2 (for BTL speaker operation)	
	5:0	ROUT2 VOL	000000 (0dB)	ROUT2 volume	

Register 04h controls the headphone output pins, HPOUTL and HPOUTR.

REG ADDR	BIT	LABEL	DEFAULT	DESCRIPTION	REFER TO
04h	15	MU	1 (mute)	Mutes HPOUTL and HPOUTR.	Analogue Audio Outputs
	13:8	HPOUTL VOL	000000 (0dB)	HPOUTL volume	
	7	ZC	0 (OFF)	Enables zero-cross detector	
	5:0	HPOUTR VOL	000000 (0dB)	HPOUTR volume	

Register 06h controls the analogue output pin MONOOUT.

REG ADDR	BIT	LABEL	DEFAULT	DESCRIPTION	REFER TO
06h	15	MU	1 (mute)	Mutes MONOOUT.	Analogue Audio Outputs
	7	ZC	0 (OFF)	Enables zero-cross detector	
	5:0	MONOOUT VOL	000000 (0dB)	MONOOUT volume	

Register 08h controls the bass and treble response of the left and right audio DAC (but not AUXDAC).

REG ADDR	BIT	LABEL	DEFAULT	DESCRIPTION	REFER TO
08h	15	BB	0 (linear)	Selects linear bass control or adaptive bass boost	Audio DACs, Tone Control / Bass Boost
	12	BC	0 (low)	Selects bass cut-off frequency	
	11:8	BASS	1111 (OFF)	Controls bass intensity	
	6	DAT	0 (OFF)	Enables 6dB pre-DAC attenuation	
	4	TC	0 (high)	Selects treble cut-off frequency	
	3:0	TRBL	1111 (OFF)	Controls treble intensity	

Register 0Ah controls the analogue input pin PCBEEP.

REG ADDR	BIT	LABEL	DEFAULT	DESCRIPTION	REFER TO
0Ah	15	B2H	1 (mute)	Mutes PCBEEP to headphone mixer path	Analogue Inputs, PCBEEP Input
	14:12	B2HVOL	010 (0dB)	Controls gain of PCBEEP to headphone mixer path	
	11	B2S	1 (mute)	Mutes PCBEEP to speaker mixer path	
	10:8	B2SVOL	010 (0dB)	Controls gain of PCBEEP to speaker mixer path	
	7	B2P	1 (mute)	Mutes PCBEEP to phone mixer path	
	6:4	B2PVOL	010 (0dB)	Controls gain of PCBEEP to phone mixer path	

Register 0Ch controls the analogue input pin PHONE.

REG ADDR	BIT	LABEL	DEFAULT	DESCRIPTION	REFER TO
0Ch	15	P2H	1 (mute)	Mutes PHONE to headphone mixer path	Analogue Inputs, PHONE Input
	14	P2S	1 (mute)	Mutes PHONE to speaker mixer path	
	4:0	PHONEVOL	01000 (0dB)	Controls PHONE input gain to all mixers (but not to ADC)	

Register 0Eh controls the analogue input pins MIC1 and MIC2.

REG ADDR	BIT	LABEL	DEFAULT	DESCRIPTION	REFER TO
0Eh	14	M12P	1 (mute)	Mutes MIC1 to phone mixer path	Analogue Inputs, Microphone Input
	13	M22P	1 (mute)	Mutes MIC2 to phone mixer path	
	12:8	LMICVOL	01000 (0dB)	Controls volume of MIC1 (left), in stereo mode only	
	7	20dB	0 (OFF)	Enables 20dB gain boost	
	6:5	MS	00 (MIC1 only)	Selects microphone mode. 00=MIC1 only, 01=differential, 10=MIC2 only, 11=stereo	
	4:0	MICVOL	01000 (0dB)	Controls mic volume (except MIC1 in stereo mode)	

Register 10h controls the analogue input pins LINEINL and LINEINR.

REG ADDR	BIT	LABEL	DEFAULT	DESCRIPTION	REFER TO
10h	15	L2H	1 (mute)	Mutes LINEIN to headphone mixer path	Analogue Inputs, Line Input
	14	L2S	1 (mute)	Mutes LINEIN to speaker mixer path	
	13	L2P	1 (mute)	Mutes LINEIN to phone mixer path	
	12:8	LINEINLVOL	01000 (0dB)	Controls LINEINL input gain to all mixers (but not to ADC)	
	4:0	LINEINRVOL	01000 (0dB)	Controls LINEINR input gain to all mixers (but not to ADC)	

Register 12h controls the output signal of the auxiliary DAC.

REG ADDR	BIT	LABEL	DEFAULT	DESCRIPTION	REFER TO
12h	15	A2H	1 (mute)	Mutes AUXDAC to headphone mixer path	Auxiliary DAC
	14:12	A2HVOL	010 (0dB)	Controls gain of AUXDAC to headphone mixer path	
	11	A2S	1 (mute)	Mutes AUXDAC to speaker mixer path	
	10:8	A2SVOL	010 (0dB)	Controls gain of AUXDAC to speaker mixer path	
	7	A2P	1 (mute)	Mutes AUXDAC to phone mixer path	
	6:4	A2PVOL	010 (0dB)	Controls gain of AUXDAC to phone mixer path	
	0	AXE	0 (0FF)	Enables AUXDAC	

Register 14h controls the side tone paths.

REG ADDR	BIT	LABEL	DEFAULT	DESCRIPTION	REFER TO
14h	15	STM	1 (mute)	Mutes microphone to headphone mixer path	Audio Mixers, Side Tone Control
	14:12	STVOL	010 (0dB)	Controls gain of microphone to headphone mixer path	
	11:10	ALCM	11 (mute both)	Selects ALC to headphone mixer path. 00=stereo, 01=right only, 10=left only, 11=mute both left and right	
	9:7	ALCVOL	010 (0dB)	Controls gain of ALC to headphone mixer path	

Register 16h controls the analogue output pin OUT3, and also contains one control bit that affects LOUT2 and ROUT2.

REG ADDR	BIT	LABEL	DEFAULT	DESCRIPTION	REFER TO
16h	15	MU	1 (mute)	Mutes OUT3.	Analogue Audio Outputs
	10:9	OUT3SRC	00 (-HPOUTL)	Selects source of OUT3 signal. 00=-HPOUTL, 01=VREF, 10=HPOUTL+HPOUTR, 11=-MONOOUT	
	8	SRC	0 (spkr mix)	Selects source of LOUT2 and ROUT2 signals. 0=from speaker mixer, 1=from headphone mixer	
	7	ZC	0 (disabled)	Zero-cross enable	
	5:0	OUT3VOL	000000 (0dB)	OUT3 volume	

Register 18h controls the audio DACs (but not AUXDAC).

REG ADDR	BIT	LABEL	DEFAULT	DESCRIPTION	REFER TO
18h	15	D2H	1 (mute)	Mutes DAC to headphone mixer path	Audio DACs
	14	D2S	1 (mute)	Mutes DAC to speaker mixer path	
	13	D2P	1 (mute)	Mutes DAC to phone mixer path	
	12:8	LDACVOL	01000 (0dB)	Controls left DAC input gain to all mixers	
	4:0	RDACVOL	01000 (0dB)	Controls right DAC input gain to all mixers	

Register 1Ah controls the record selector and the ADC to phone mixer path.

REG ADDR	BIT	LABEL	DEFAULT	DESCRIPTION	REFER TO
1Ah	14	BOOST	0 (OFF)	Enables 20dB gain boost for recording	Audio ADC, Record Selector
	13:12	R2P	11 (mute)	Controls ADC to phone mixer path. 00=stereo, 01=left ADC only, 10=right ADC only, 11=mute left and right	
	11	R2PBST	0 (OFF)	Enables 20dB gain boost for ADC to phone mixer path	
	10:8	RECSL	000 (mic)	Selects left ADC signal source	
	2:0	RECSR	000 (mic)	Selects right ADC signal source	

Register 1Ch controls the recording gain.

REG ADDR	BIT	LABEL	DEFAULT	DESCRIPTION	REFER TO
1Ch	15	RMU	1 (mute)	Mutes audio ADC input	Audio ADC, Record Gain
	14	GRL	0 (standard)	Selects gain range for PGA of left ADC. 0=0...+22.5dB in 1.5dB steps, 1=-17.25...+30dB in 0.75dB steps	
	13:8	RECVOLL	000000 (0dB)	Controls left ADC recording volume	
	7	ZC	0 (OFF)	Enables zero-cross detector	
	6	GRR	0 (standard)	Selects gain range for PGA of left ADC. 0=0...+22.5dB in 1.5dB steps, 1=-17.25...+30dB in 0.75dB steps	
	5:0	RECVOLR	000000 (0dB)	Controls right ADC recording volume	

Register 20h is a "general purpose" register as defined by the AC'97 specification. Only two bits are implemented in the WM9711L.

REG ADDR	BIT	LABEL	DEFAULT	DESCRIPTION	REFER TO
20h	13	3DE	0 (OFF)	Enables 3D enhancement	Audio DACs, 3D Stereo Enhancement
	7	LB	0 (OFF)	Enables loopback (i.e. feed ADC output data directly into DAC)	Intel's AC'97 Component Specification, Revision 2.2, page 55

Register 22h controls 3D stereo enhancement for the audio DACs.

REG ADDR	BIT	LABEL	DEFAULT	DESCRIPTION	REFER TO
22h	5	3DLC	0 (low)	Selects lower cut-off frequency	Audio DACs, 3D Stereo Enhancement
	4	3DUC	0 (high)	Selects upper cut-off frequency	
	3:0	3DDEPTH	0000 (0%)	Controls depth of 3D effect	

Register 24h is for power management additional to the AC'97 specification. Note that the actual state of each circuit block depends on both register 24h AND register 26h.

REG ADDR	BIT	LABEL	DEFAULT	DESCRIPTION	REFER TO
24h	15	PD15	0 *	Disables Crystal Oscillator	Power Management
	14	PD14	0 *	Disables left audio DAC	
	13	PD13	0 *	Disables right audio DAC	
	12	PD12	0 *	Disables left audio ADC	
	11	PD11	0 *	Disables right audio ADC	
	10	PD10	0 *	Disables MICBIAS	
	9	PD9	0 *	Disables left headphone mixer	
	8	PD8	0 *	Disables right headphone mixer	
	7	PD7	0 *	Disables speaker mixer	
	6	PD6	0 *	Disables MONO_OUT buffer (pin 33) and phone mixer	
	5	PD5	0 *	Disables OUT3 buffer (pin 37)	
	4	PD4	0 *	Disables headphone buffers (HPOUTL/R)	
	3	PD3	0 *	Disables speaker outputs (LOUT2, ROUT2)	
	2	PD2	0 *	Disables Line Input PGA (left and right)	
	1	PD1	0 *	Disables Phone Input PGA	
	0	PD0	0 *	Disables Mic Input PGA (left and right)	
* "0" corresponds to "ON", if and only if the corresponding bit in register 26h is also 0.					

Register 26h is for power management according to the AC'97 specification. Note that the actual state of many circuit blocks depends on both register 24h AND register 26h.

REG ADDR	BIT	LABEL	DEFAULT	DESCRIPTION	REFER TO
26h	14	PR6	see note	Disables HPOUTL, HPOUTR and OUT3 Buffer	Power Management
	13	PR5		Disables Internal Clock	
	12	PR4		Disables AC-link interface (external clock off)	
	11	PR3		Disables VREF, analogue mixers and outputs	
	10	PR2		Disables analogue mixers, LOUT2, ROUT2 (but not VREF)	
	9	PR1		Disables Stereo DAC and AUXDAC	
	8	PR0		Disables audio ADCs and input Mux	
	3	REF	inverse of PR2	Read-only bit, Indicates VREF is ready	
	2	ANL	inverse of PR3	Read-only bit, indicates analogue mixers are ready	
	1	DAC	inverse of PR1	Read-only bit, indicates audio DACs are ready	
	0	ADC	inverse of PR0	Read-only bit, indicates audio ADCs are ready	
Note: PR6 to PR0 default to 1 if pin 47 is held high during reset, otherwise they default to 0.					

Register 28h is a read-only register that indicates to the driver which advanced AC'97 features the WM9711L supports.

REG ADDR	BIT	LABEL	DEFAULT	DESCRIPTION	REFER TO
28h	15:14	ID	00	Indicates that the WM9711L is configured as the primary codec in the system.	Intel's AC'97 Component Specification, Revision 2.2, page 59
	11:10	REV	01	Indicates that the WM9711L conforms to AC'97 Rev2.2	
	9	AMAP	0	Indicates that the WM9711L does not support slot mapping	
	8	LDAC	0	Indicates that the WM9711L does not have an LFE DAC	
	7	SDAC	0	Indicates that the WM9711L does not have Surround DACs	
	6	CDAC	0	Indicates that the WM9711L does not have a Centre DAC	
	3	VRM	0	Indicates that the WM9711L does not have a dedicated, variable rate microphone ADC	
	2	SPDIF	1	Indicates that the WM9711L supports SPDIF output	
	1	DRA	0	Indicates that the WM9711L does not support double rate audio	
	0	VRA	1	Indicates that the WM9711L supports variable rate audio	

Register 2Ah controls the SPDIF output and variable rate audio.

REG ADDR	BIT	LABEL	DEFAULT	DESCRIPTION	REFER TO
2Ah	10	SPCV	1 (valid)	SPDIF validity bit (read-only)	Digital Audio (SPDIF) Output
	5:4	SPSA	01 (slots 6, 9)	Controls SPDIF slot assignment. 00=slots 3 and 4, 01=6/9, 10=7/8, 11=10/11	
	2	SEN	0 (OFF)	Enables SPDIF output enable	
	0	VRA	0 (OFF)	Enables variable rate audio	

Registers 2Ch, 2Eh 32h and control the sample rates for the stereo DAC, auxiliary DAC and audio ADC, respectively.

REG ADDR	BIT	LABEL	DEFAULT	DESCRIPTION	REFER TO
2Ch	all	DACSR	BB80h	Controls stereo DAC sample rate	Variable Rate Audio / Sample Rate Conversion
2Eh	all	AUXDACSR	BB80h	Controls auxiliary DAC sample rate	
32h	all	ADCSR	BB80h	Controls audio ADC sample rate	
Note: The VRA bit in register 2Ah must be set first to obtain sample rates other than 48kHz					

Register 3Ah controls the SPDIF output.

REG ADDR	BIT	LABEL	DEFAULT	DESCRIPTION	REFER TO
3Ah	15	V	0	Validity bit; '0' indicates frame valid, '1' indicates frame not valid	Digital Audio (SPDIF) Output
	14	DRS	0	Indicates that the WM9711L does not support double rate SPDIF output (read-only)	
	13:12	SPSR	10	Indicates that the WM9711L only supports 48kHz sampling on the SPDIF output (read-only)	
	11	L	0	Generation level; programmed as required by user	
	10:4	CC	0000000	Category code; programmed as required by user	
	3	PRE	0	Pre-emphasis; '0' indicates no pre-emphasis, '1' indicates 50/15us pre-emphasis	
	2	COPY	0	Copyright; '0' indicates copyright is not asserted, '1' indicates copyright	
	1	AUDIB	0	Non-audio; '0' indicates data is PCM, '1' indicates non-PCM format (e.g. DD or DTS)	
	0	PRO	0	Professional; '0' indicates consumer, '1' indicates professional	

Register 4Ch to 54h control the GPIO pins and virtual GPIO signals.

REG ADDR	BIT	LABEL	DEFAULT	DESCRIPTION	REFER TO
4Ch		please refer to the register map	all 1 (all inputs) except unused bits	Controls GPIO configuration as inputs or as outputs (note: virtual GPIOs can only be inputs)	GPIO and Interrupt Control
4Eh			all 1	Controls GPIO polarity (actual polarity depends on register 4Ch AND register 4Eh)	
50h			all 0 (not sticky)	Makes GPIO signals sticky	
52h			all 0 (OFF)	Enables wake-up for each GPIO signal	
54h			= status of GPIO inputs	GPIO pin status (read from inputs, write '0' to clear sticky bits)	
	15			Controls Comparator 1 signal (virtual GPIO)	
	14			Controls Comparator 2 signal (virtual GPIO)	
	13-12			Unused	
	11			Controls Thermal sensor signal (virtual GPIO)	
	10-6			Unused	
	5			Controls GPIO5 (pin 48)	
	4			Controls GPIO4 (pin 47)	
	3			Controls GPIO3 (pin 46)	
	2			Controls GPIO2 (pin 45)	
	1			Controls GPIO1 (pin 44)	

Register 56h controls the use of GPIO pins for non-GPIO functions.

REG ADDR	BIT	LABEL	DEFAULT	DESCRIPTION	REFER TO
56h	5	GE5	1 (GPIO)	Selects between GPIO5 and SPDIF_OUT function for pin 48	GPIO and Interrupt Control
	2	GE2	1 (GPIO)	Selects between GPIO2 and IRQ function for pin 45	

Register 58h controls several additional functions.

REG ADDR	BIT	LABEL	DEFAULT	DESCRIPTION	REFER TO
58h	15:13	COMP2DEL	000 (no delay)	Selects Comparator 2 delay	Battery Alarm
	12	JIEN	0	Enables Jack Insert Detection	Analogue Audio Outputs, Jack Insertion and Auto-Switching
	11	FRC	0	Forces Jack Insert Detection	
	10	SVD	0 (enabled)	Disables VREF for lowest possible power consumption	Power Management
	3:2	DIE REV	Indicates device revision. 10=Rev.C		N/A
	1	WAKEEN	0 (no wake-up)	Enables GPIO wake-up	GPIO and Interrupt Control
	0	IRQ INV	0 (not inverted)	Inverts the IRQ signal (pin 45)	

Register 5Ch controls several additional functions.

REG ADDR	BIT	LABEL	DEFAULT	DESCRIPTION	REFER TO
5Ch	15	AMUTE	0	Read-only bit to indicate DAC auto-muting	Audio DACs, Stereo DACs
	14	C1REF	0 (AVDD/2)	Selects Comparator 1 Reference Voltage	Battery Alarm
	13:12	C1SRC	00 (OFF)	Selects Comparator 1 Signal Source	
	11	C2REF	0 (AVDD/2)	Selects Comparator 1 Reference Voltage	
	10:9	C2SRC	00 (OFF)	Selects Comparator 1 Signal Source	
	8	DS	0	Selects differential microphone input pins. 0=MIC1 and MIC2, 1=LINEL and LINER	Analogue Inputs, Microphone Input
	7	AMEN	0 (OFF)	Enables DAC Auto-Mute	
	6:5	VBIAS	00	Selects analogue bias for lowest power, depending on AVDD supply. 0X=3.3V, 10=2.5V, 11=1.8V	Power Management
	4	ADCO	0	Selects source of SPDIF data. 0=from SDATAOUT, 1= from audio ADC	Digital Audio (SPDIF) Output
	3	HPF	0	Disables ADC high-pass filter	Audio ADC
	2	ENT	0	Enables thermal sensor	Analogue Audio Outputs, Thermal Sensor
	1:0	ASS	00	Selects time slots for stereo ADC data. 00=slots 3 and 4, 01=7/8, 10=6/9, 11=10/11	Audio ADC, ADC Slot Mapping

Registers 60h and 62h control the ALC and Noise Gate functions.

REG ADDR	BIT	LABEL	DEFAULT	DESCRIPTION	REFER TO
60h	15:12	ALCL	1011 (-12dB)	Controls ALC threshold	Audio ADC, Automatic Level Control
	11:8	HLD	0000 (0 ms)	Controls ALC hold time	
	7:4	DCY	0011 (192 ms)	Controls ALC decay time	
	3:0	ATK	0010 (24 ms)	Controls ALC attack time	
62h	15:14	ALCSEL	00 (OFF)	Controls which channel ALC operates on. 00=none, 01=right only, 10=left only, 11=both	
	13:11	MAXGAIN	111 (+30dB)	Controls upper gain limit for ALC	
	10:9	ZC TIMEOUT	11 (slowest)	Controls time-out for zero-cross detection	
	8	ALCZC	0 (OFF)	Enables zero-cross detection for ALC	
	7	NGAT	0 (OFF)	Enables noise gate function	
	5	NGG	0 (hold gain)	Selects noise gate type. 0=hold gain, 1=mute	
	4:0	NGTH	00000 (-76.5dB)	Controls noise gate threshold	

Register 64h controls the input signal of the auxiliary DAC.

REG ADDR	BIT	LABEL	DEFAULT	DESCRIPTION	REFER TO
64h	15	XSLE	0	Selects input for AUXDAC. 0=from AUXDACVAL (for DC signals), 1=from AC-Link slot (for AC signals)	Auxiliary DAC
	14:12	AUXDACSLT	000 (Slot 5)	Selects input slot for AUXDAC (with XSLE=1)	
	11:0	AUXDACVAL	000000000	AUXDAC Digital Input for AUXDAC (with XSLE=0). 000h= minimum, FFFh=full-scale	

Register 7Ch and 7Eh are read-only registers that indicate the identity of the device to the driver.

REG ADDR	BIT	LABEL	DEFAULT	DESCRIPTION	REFER TO
7Ch	15:8	F7:0	57h	ASCII character “W” for Wolfson	Intel’s AC’97 Component Specification, Revision 2.2, page 50
	7:0	S7:0	4Dh	ASCII character “M”	
7Eh	15:8	T7:0	4Ch	ASCII character “L”	
	7:0	REV7:0	12h	Number 12	

APPLICATIONS INFORMATION

RECOMMENDED EXTERNAL COMPONENTS

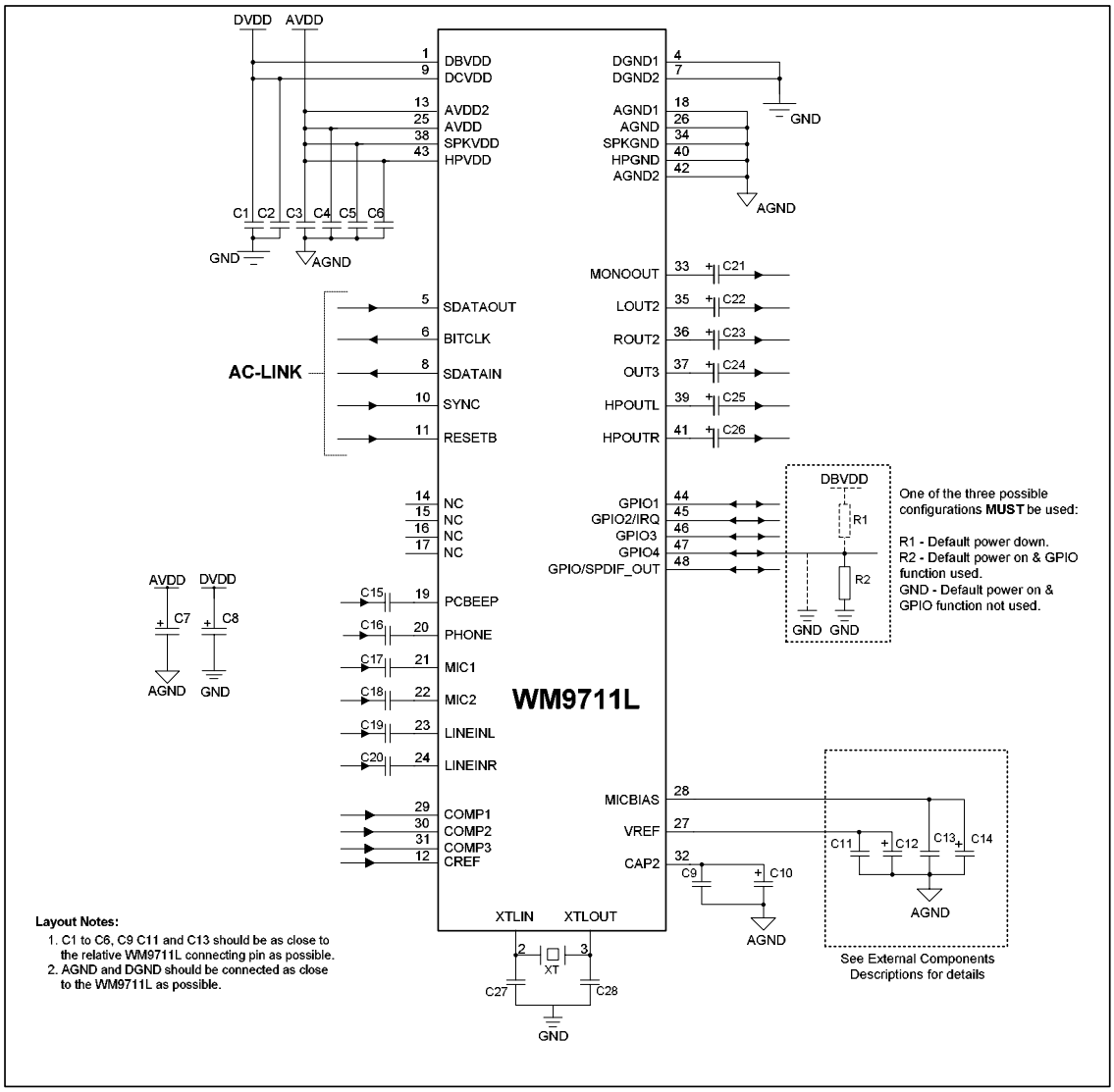

Figure 15 External Components Diagram

RECOMMENDED EXTERNAL COMPONENT VALUES

COMPONENT REFERENCE	SUGGESTED VALUE	DESCRIPTION
C1 - C6	100nF	De-coupling for DBVDD,DCVDD,TPVDD,AVDD,SPKVDD,HPVDD
C7 - C8	10uF	Reservoir capacitor for DVDD, AVDD. Should the supplies use separate sources then additional capacitors will be required of each additional source.
C9	100nF	De-coupling for CAP2.
C10	10uF	Reservoir capacitor for CAP2
C11	100nF	De-coupling for VREF
C12	10uF	Reservoir capacitor for VREF
C13	100nF	De-coupling for MICBIAS - Not required if MICBIAS output is not used
C14	10uF	Reservoir capacitor for MICBIAS - Not required if MICBIAS output is not used
C27 and C28	22pF	Required when used with a parallel resonant crystal.
C15 - C20	1uF	AC coupling capacitors
C21 - C23	2.2uF	Output AC coupling capacitors to remove VREF DC level from outputs
C24 - C26	220µF	Output AC coupling capacitors to remove VREF DC level from outputs.
R1	100kΩ	Pull-up resistor, ensures that all circuit blocks are OFF by default
R2	100kΩ	Pull down resistor, ensures that all circuit blocks are ON by default
XT	24.576MHz	AC'97 master clock frequency. A bias resistor is not required but if connected will not affect operation if the value is large (above 1MΩ)

Table 36 External Components Descriptions

Note:

1. For Capacitors C7, C8, C10, C12 and C14 it is recommended that very low ESR components are used.

LINE OUTPUT

The headphone outputs, HPOUTL and HPOUTR, can be used as stereo line outputs. The speaker outputs, LOUT2 and ROUT2, can also be used as line outputs, if ROUT2 is not inverted for BTL operation (INV = 0). Recommended external components are shown below.

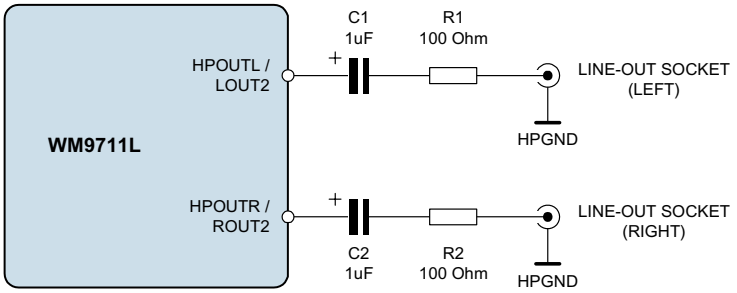

Figure 16 Recommended Circuit for Line Output

The DC blocking capacitors and the load resistance together determine the lower cut-off frequency, fc. Assuming a 10 kΩ load and C1, C2 = 10µF:

$fc = 1 / 2\pi (R_L+R_1) C_1 = 1 / (2\pi \times 10.1k\Omega \times 1\mu F) = 16$ Hz

Increasing the capacitance lowers fc, improving the bass response. Smaller values of C1 and C2 will diminish the bass response. The function of R1 and R2 is to protect the line outputs from damage when used improperly.

AC-COUPLED HEADPHONE OUTPUT

The circuit diagram below shows how to connect a stereo headphone to the WM9711L.

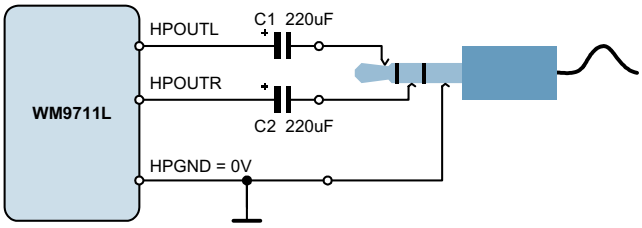

Figure 17 Simple Headphone Output Circuit Diagram

The DC blocking capacitors C1 and C2 together with the load resistance determine the lower cut-off frequency, fc. Increasing the capacitance lowers fc, improving the bass response. Smaller capacitance values will diminish the bass response. For example, with a 16Ω load and C1 = 220µF:

$fc = 1 / 2\pi R_L C_1 = 1 / (2\pi \times 16\Omega \times 220\mu F) = 45$ Hz

DC COUPLED (CAPLESS) HEADPHONE OUTPUT

In the interest of saving board space and cost, it may be desirable to eliminate the 220µF DC blocking capacitors. This can be achieved by using OUT3 as a headphone pseudo-ground, as shown below.

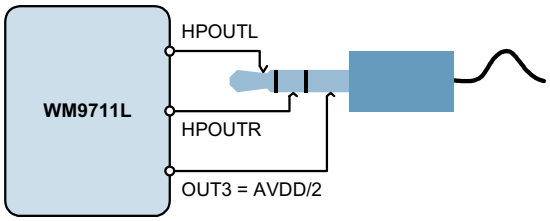

Figure 18 Capless Headphone Output Circuit Diagram (OUT3SRC = 10)

As the OUT3 pin produces a DC voltage of AVDD/2, there is no DC offset between HPOUTL/HPOUTR and OUT3, and therefore no DC blocking capacitors are required. However, this configuration has some drawbacks:

- The power consumption of the WM9711L is increased, due to the additional power consumed in the OUT3 output buffer.
- If the DC coupled output is connected to the line-in of a grounded piece of equipment, then OUT3 becomes short-circuited. Although the built-in short circuit protection will prevent any damage to the WM9711L, the audio signal will not be transmitted properly.
- OUT3 cannot be used for another purpose

BTL SPEAKER OUTPUT

LOUT2 and ROUT2 can differentially drive a mono 8Ω speaker as shown below.

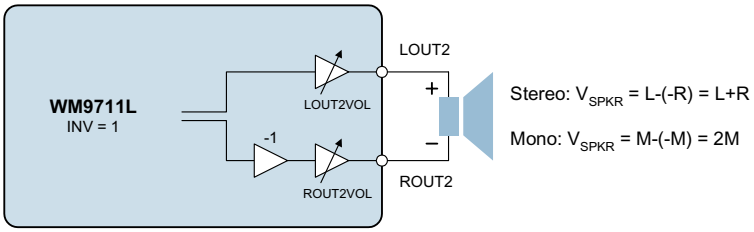

Figure 19 Speaker Output Connection (INV = 1)

The right channel is inverted by setting the INV bit, so that the signal across the loudspeaker is the sum of left and right channels.

COMBINED HEADSET / BTL EAR SPEAKER

In smartphone applications with a loudspeaker and separate ear speaker (receiver), a BTL ear speaker can be connected at the OUT3 pin, as shown below.

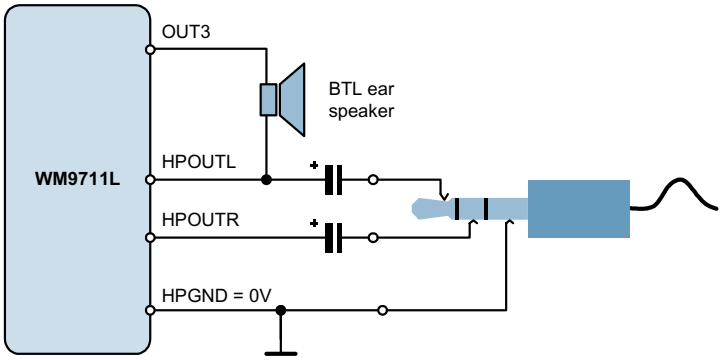

Figure 20 Combined Headset / BTL Ear Speaker (OUT3SRC = 00)

The ear speaker and the headset play the same signal. Whenever the headset is plugged in, the headphone outputs are enabled and OUT3 disabled. When the headset is not plugged in, OUT3 is enabled (see “Jack Insertion and Auto-Switching”).

COMBINED HEADSET / SINGLE-ENDED EAR SPEAKER

Instead of a BTL ear speaker, a single-ended ear speaker can also be used, as shown below.

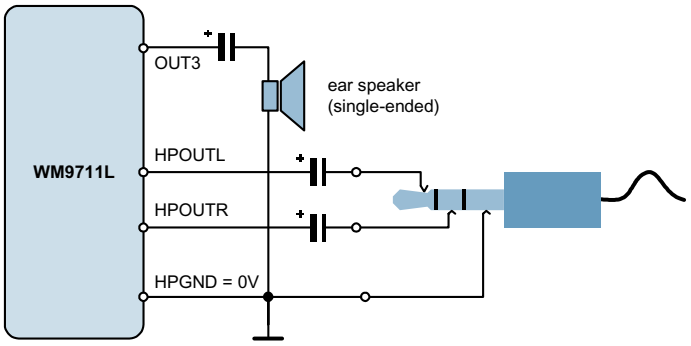

Figure 21 Combined Headset / Single-ended Ear Speaker (OUT3SRC = 01)

JACK INSERT DETECTION

The circuit diagram below shows how to detect when a headphone or headset has been plugged into the headphone socket. It generates an interrupt, instructing the controller to enable HPOUTL and HPOUTR and disable OUT3.

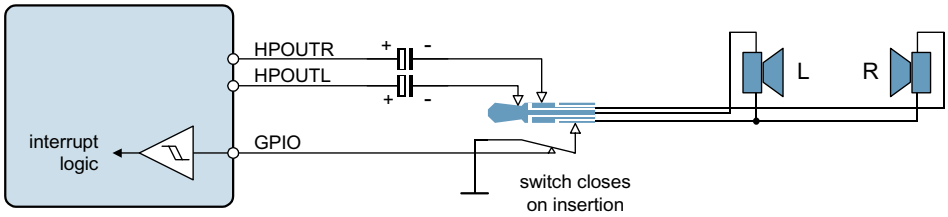

Figure 22 Jack Insert Detection Circuit

The circuit requires a headphone socket with a switch that closes on insertion. It detects both headphones and phone headsets. Any GPIO pin can be used, provided that it is configured as an input.

HOOKSWITCH DETECTION

The circuit diagram below shows how to detect when the “hookswitch” of a phone headset is pressed (pressing the hookswitch is equivalent to lifting the receiver in a stationary telephone).

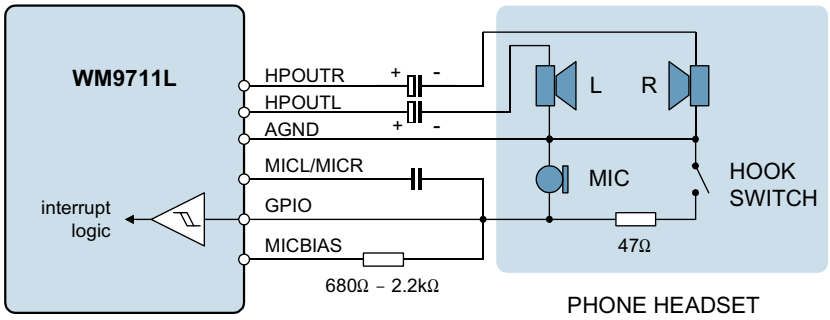

Figure 23 Hookswitch Detection Circuit

The circuit uses a GPIO pin as a sense input. The impedance of the microphone and the resistor in the MICBIAS path must be such that the potential at the GPIO pin is above 0.7×DBVDD when the hookswitch is open, and below 0.3×DBVDD when it is closed.

PACKAGE DRAWING - QFN

FL: 48 PIN QFN PLASTIC PACKAGE 7 x 7 x 0.9 mm BODY, 0.50 mm LEAD PITCH DM029.C

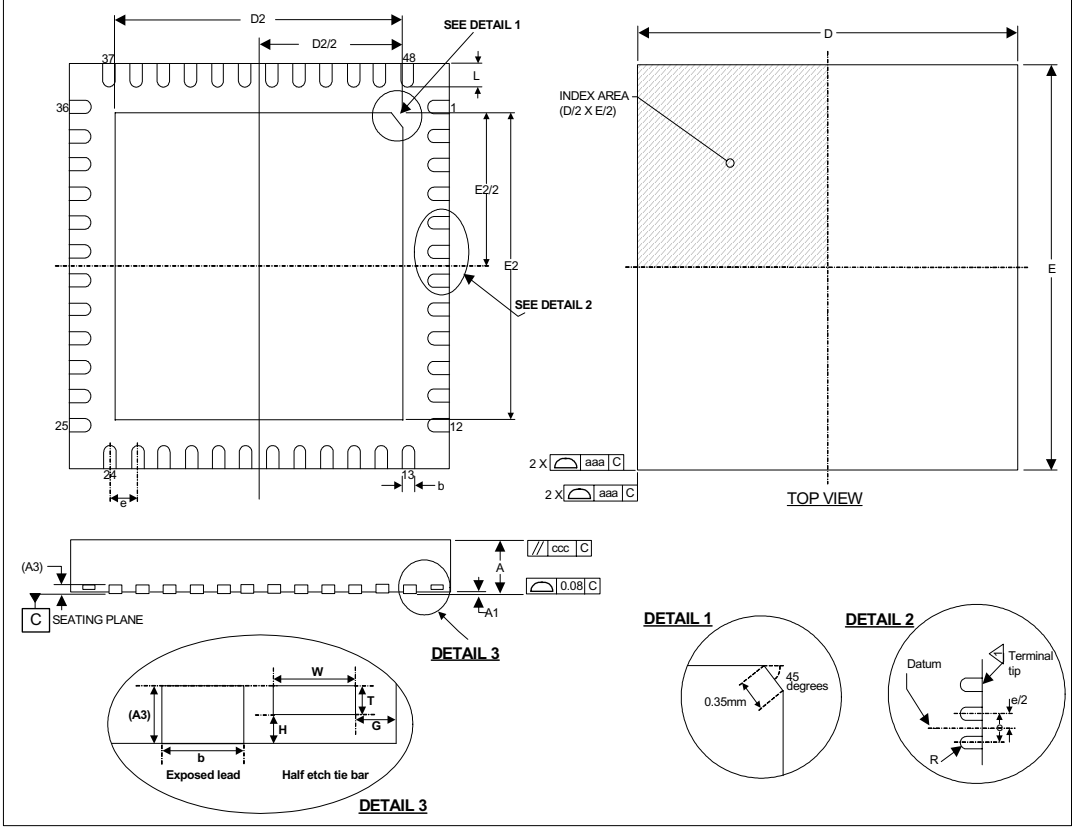

Symbols	Dimensions (mm)			
	MIN	NOM	MAX	NOTE
A	0.80	0.90	1.00	
A1	0	0.02	0.05	
A3		0.20 REF		
b	0.18	0.25	0.30	1
D		7.00 BSC		
D2	5.00	5.15	5.25	
E		7.00 BSC		
E2	5.00	5.15	5.25	
e		0.5 BSC		
G		0.213		
H		0.1		
L	0.30	0.4	0.50	
T		0.1		
W		0.2		
Tolerances of Form and Position				
aaa	0.15			
bbb	0.10			
ccc	0.10			
REF	JEDEC, MO-220, VARIATION VKKD-2			

NOTES:
1. DIMENSION b APPLIED TO METALLIZED TERMINAL AND IS MEASURED BETWEEN 0.15 mm AND 0.30 mm FROM TERMINAL TIP.
2. ALL DIMENSIONS ARE IN MILLIMETRES
3. THE TERMINAL #1 IDENTIFIER AND TERMINAL NUMBERING CONVENTION SHALL CONFORM TO JESD 95-1 SPP-002.
4. COPLANARITY APPLIES TO THE EXPOSED HEAT SINK SLUG AS WELL AS THE TERMINALS.
5. THIS DRAWING IS SUBJECT TO CHANGE WITHOUT NOTICE.

PACKAGE DRAWING – TQFP

FT: 48 PIN TQFP (7 x 7 x 1.0 mm) **DM004.C**

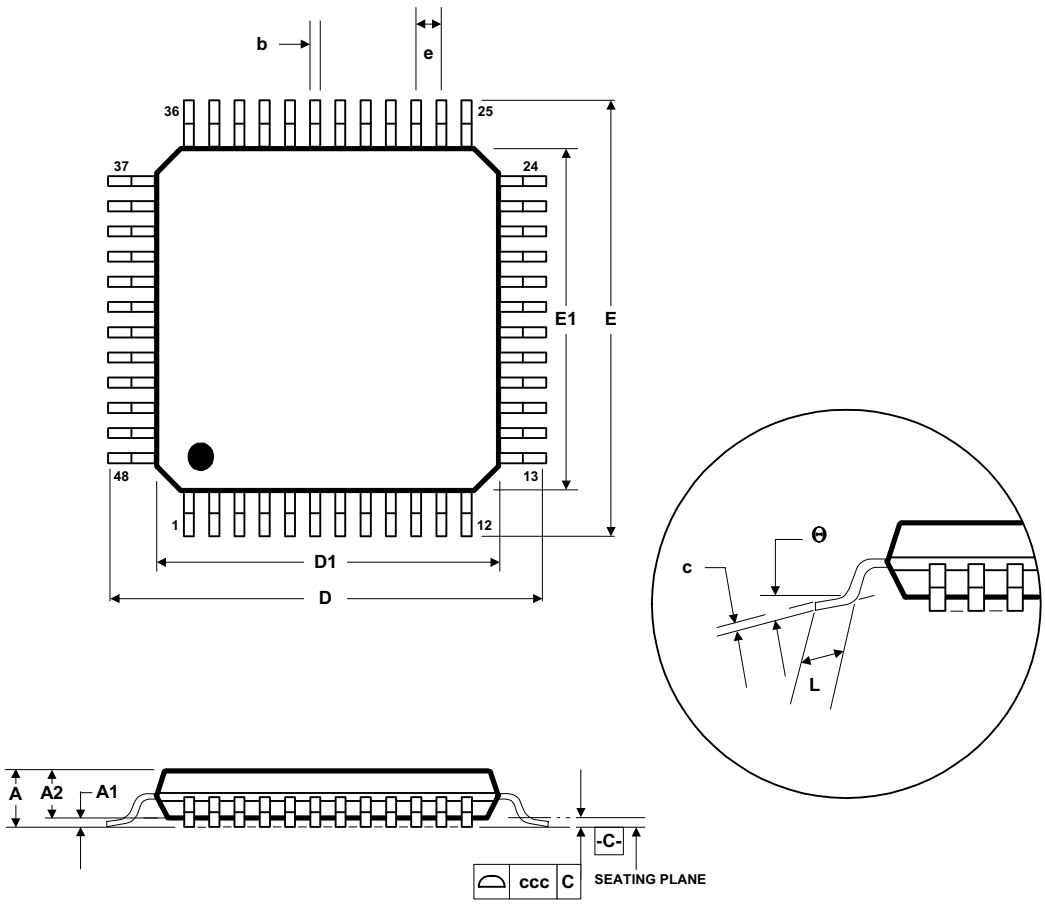

Symbols	Dimensions (mm)		
	MIN	NOM	MAX
A	-----	-----	1.20
A_1	0.05	-----	0.15
A_2	0.95	1.00	1.05
b	0.17	0.22	0.27
c	0.09	-----	0.20
D	9.00 BSC		
D_1	7.00 BSC		
E	9.00 BSC		
E_1	7.00 BSC		
e	0.50 BSC		
L	0.45	0.60	0.75
Θ	0°	3.5^o	7°
Tolerances of Form and Position			
ccc	0.08		
REF:	JEDEC.95, MS-026		

NOTES:
A. ALL LINEAR DIMENSIONS ARE IN MILLIMETERS.
B. THIS DRAWING IS SUBJECT TO CHANGE WITHOUT NOTICE.
C. BODY DIMENSIONS DO NOT INCLUDE MOLD FLASH OR PROTRUSION, NOT TO EXCEED 0.25MM.
D. MEETS JEDEC.95 MS-026, VARIATION = ABC. REFER TO THIS SPECIFICATION FOR FURTHER DETAILS.

IMPORTANT NOTICE

Wolfson Microelectronics plc (WM) reserve the right to make changes to their products or to discontinue any product or service without notice, and advise customers to obtain the latest version of relevant information to verify, before placing orders, that information being relied on is current. All products are sold subject to the WM terms and conditions of sale supplied at the time of order acknowledgement, including those pertaining to warranty, patent infringement, and limitation of liability.

WM warrants performance of its products to the specifications applicable at the time of sale in accordance with WM's standard warranty. Testing and other quality control techniques are utilised to the extent WM deems necessary to support this warranty. Specific testing of all parameters of each device is not necessarily performed, except those mandated by government requirements.

In order to minimise risks associated with customer applications, adequate design and operating safeguards must be used by the customer to minimise inherent or procedural hazards. Wolfson products are not authorised for use as critical components in life support devices or systems without the express written approval of an officer of the company. Life support devices or systems are devices or systems that are intended for surgical implant into the body, or support or sustain life, and whose failure to perform when properly used in accordance with instructions for use provided, can be reasonably expected to result in a significant injury to the user. A critical component is any component of a life support device or system whose failure to perform can be reasonably expected to cause the failure of the life support device or system, or to affect its safety or effectiveness.

WM assumes no liability for applications assistance or customer product design. WM does not warrant or represent that any license, either express or implied, is granted under any patent right, copyright, mask work right, or other intellectual property right of WM covering or relating to any combination, machine, or process in which such products or services might be or are used. WM's publication of information regarding any third party's products or services does not constitute WM's approval, license, warranty or endorsement thereof.

Reproduction of information from the WM web site or datasheets is permissible only if reproduction is without alteration and is accompanied by all associated warranties, conditions, limitations and notices. Representation or reproduction of this information with alteration voids all warranties provided for an associated WM product or service, is an unfair and deceptive business practice, and WM is not responsible nor liable for any such use.

Resale of WM's products or services with statements different from or beyond the parameters stated by WM for that product or service voids all express and any implied warranties for the associated WM product or service, is an unfair and deceptive business practice, and WM is not responsible nor liable for any such use.

ADDRESS:

Wolfson Microelectronics plc

26 Westfield Road

Edinburgh

EH11 2QB

United Kingdom

Tel :: +44 (0)131 272 7000

Fax :: +44 (0)131 272 7001

Email :: sales@wolfsonmicro.com