查询CXA1563M供应商 捷多邦，专业PCB打样工厂，24小时加急出货

SONY

CXA1563M/S

Dolby* B-C Type Noise Reduction System with Built-in S type Switch

Description

The CXA1563M/S is a bipolar IC incorporating dual channel Dolby B-C type noise reduction (NR) system and Dolby S type switch. Dolby B-C-S type stereo system is completed by using this IC in conjunction with two CXA1417S or two CXA1417Q.

A reduction in the number of external parts and small package have been achived due to the fact that the spectral skewing circuits are all on-chip.

CXA1563M
28 pin SOP (Plastic)

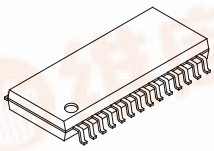

CXA1563S
28 pin SDIP (Plastic)

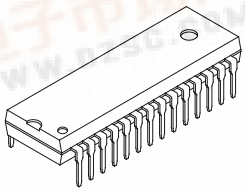

Features

- Few external parts
- Spectral skewing circuit are on-chip
- NR ON/OFF, REC/PB, MPX filter ON/OFF, Dolby S type switches
- Small package (28-pin SOP, 28-pin SDIP)
- Low current consumption 13mA Typ. (power supply ±6V)
- Dual channel processors

Structure

Bipolar silicon monolithic IC

Absolute Maximum Ratings

• Supply voltage	V_{CC}	17	V
• Operating temperature	Topr	–40 to +85	°C
• Storage temperature	Tstg	–65 to +150	°C
• Allowable power dissipation	P_D	600 (SOP)	mW
		1200 (SDIP)	mW

* This IC is available only to the licensees of Dolby Laboratories Licensing Corporation from whom licensing and applications information may be obtained.

* "Dolby" and the double D symbols are trademarks of Dolby Laboratories Licensing Corporation.

Sony reserves the right to change products and specifications without prior notice. This information does not convey any license by any implication or otherwise under any patents or other right. Application circuits shown, if any, are typical examples illustrating the operation of the devices. Sony cannot assume responsibility for any problems arising out of the use of these circuits.

找PDF pdf.dzsc.com

Block Diagram and Pin Configuration

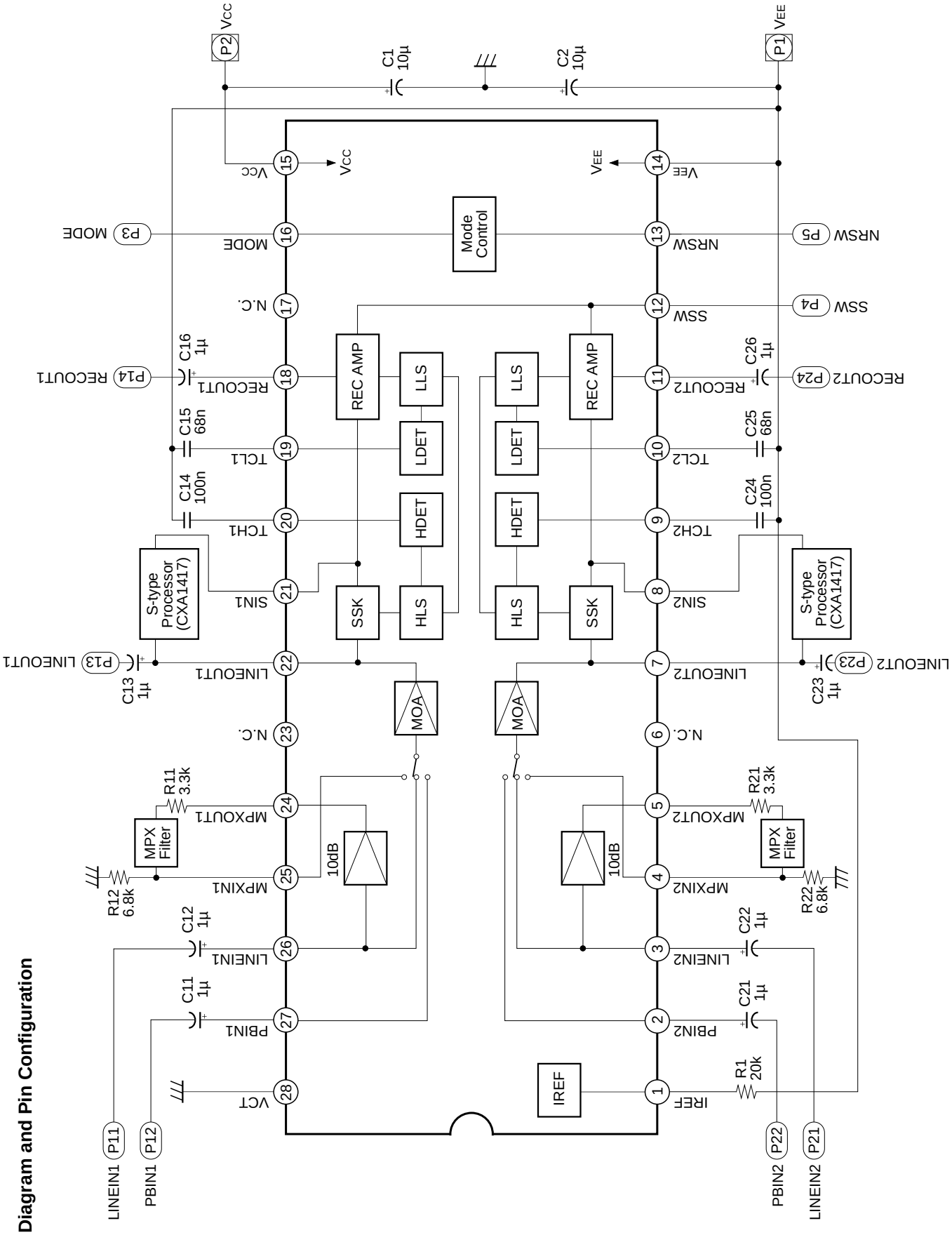

Pin Description and Equivalent Circuit

Pin No.	Symbol	Z: Imp	VDC (V)	Equivalent circuit	Description
1	IREF	0	V_{EE} + 1.25V	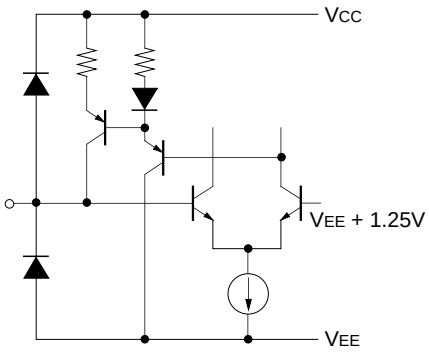	Reference current pin for setting internal filter cut-off frequency
2, 27	PB IN	40K	VCT	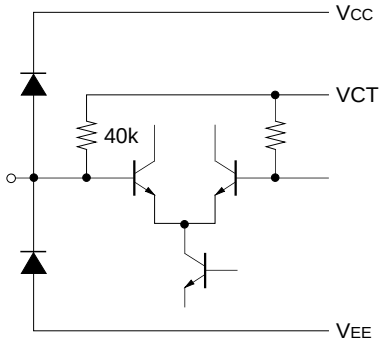	Playback input pin Reference level = –30dBm
4, 25	MPX IN				Buffer amplifier input pin to drive multiplex filter Reference level = –19dBm
3, 26	LINE IN	62K	VCT	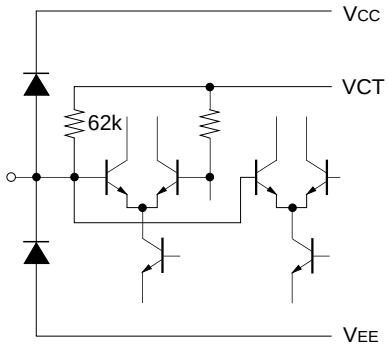	Recording input pin Reference level = –25dBm
5, 24	MPX OUT	0	VCT	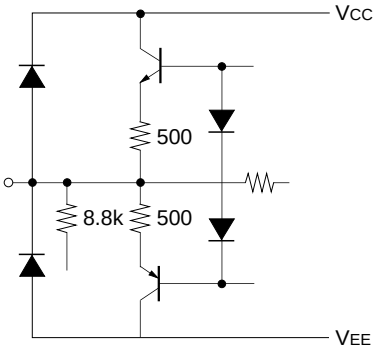	Buffer amplifier output pin to drive multiplex filter Reference level = –21dBm

Pin No.	Symbol	Z: Imp	VDC (V)	Equivalent circuit	Description
7, 22	LINE OUT	0	VCT	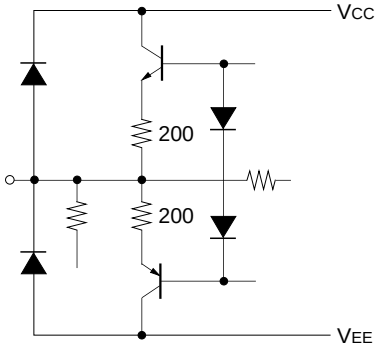	Line output pin
8, 21	SIN	—	—	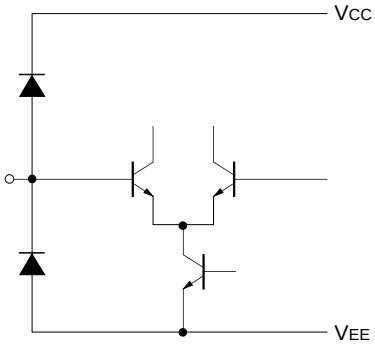	Dolby S type connecting pin
9, 20	TCH	—	VEE + 0.4V	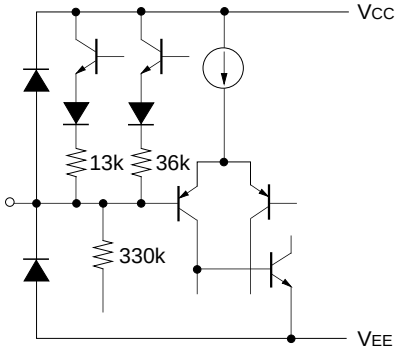	Time constant connecting pin for HLS detector
10, 19	TCL	—	VEE + 0.4V	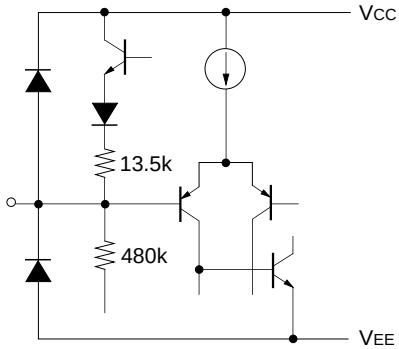	Time constant connecting pin for LLS detector

Pin No.	Symbol	Z: Imp	VDC (V)	Equivalent circuit	Description
11, 18	REC OUT	0	VCT	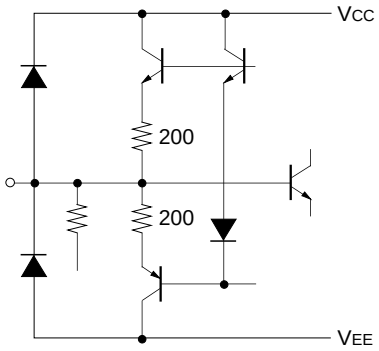	Recording output pin Reference level = –6dBm
12	SSW	—	—	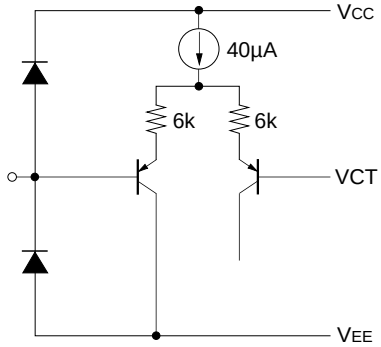	Dolby S type switching pin H or Open: B-C type L : S type
13	NRSW	—	—	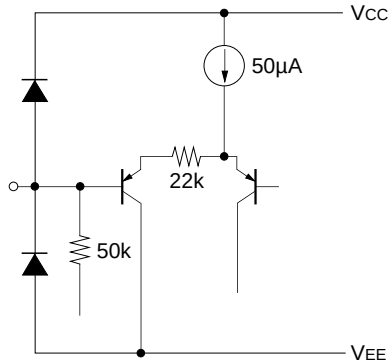	NR control pin H: C type M: B type L: NR OFF
14	VEE		VEE		Dual power supply: VEE Single power supply: GND pin
15	VCC		VCC		VCC
16	MODE	—	—	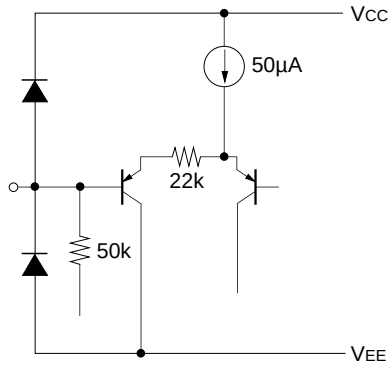	MODE control pin H: REC (Filter ON) M: REC (Filter OFF) L: PB
28	VCT	0	VCT		Dual power supply: GND Single power supply: VCC/2

Electrical Characteristics

(Ta = 25°C, Dolby level: –6dBm (= 388mVrms) at REC OUT, V_{CC} = 12V (single power supply))

Characteristics	Symbol	Measurement conditions*				Min.	Typ.	Max.	Unit
		R/P	NR	f (Hz)	Other conditions				
Operating voltage	Vopr	—	—	—		7.2	—	16	V
Current consumption	I_{CC}	REC	OFF	—	No Signal	8.0	13.0	18.0	mA
LINE OUT level	Vlout	REC	OFF	1k		–7.0	–6.0	–5.0	dBm
LINE IN level	Vlin	REC	OFF	1k		–27	–25	–23	dBm
PB IN level	Vpin	PB	OFF	1k		–32	–30	–28	dBm
MPX amplifier gain	Gmpx	MPX	OFF	1k		9.0	10.0	11.0	dB
Encode characteristics									
B type boost									
(1)	B-R-1	REC	B	500	–25dB	1.4	2.9	4.4	dB
(2)	B-R-2	REC	B	5k	–25dB	3.9	5.4	6.9	dB
(3)	B-R-3	REC	B	10k	–40dB	9.7	10.4	11.4	dB
(4)	B-R-4	REC	B	10k	–0dB	–1.1	0.4	1.9	dB
C type boost									
(1)	C-R-1	REC	C	500	–60dB	14.2	16.2	18.2	dB
(2)	C-R-2	REC	C	500	–25dB	7.2	9.2	11.2	dB
(3)	C-R-3	REC	C	2k	–60dB	18.7	20.7	22.7	dB
(4)	C-R-4	REC	C	2k	–25dB	5.4	7.4	9.4	dB
(5)	C-R-5	REC	C	5k	–25dB	3.5	5.5	7.5	dB
(6)	C-R-6	REC	C	10k	–0dB	–5.5	–3.5	–1.5	dB
Signal handling	Vomax	REC	OFF	1k	THD = 1%	13.5	19.0	—	dB
Total harmonic distortion									
1) NR OFF	THD (OFF)	REC	OFF	1k	+10dB	—	0.02	0.1	%
2) B	THD (B)	REC	B	1k	+10dB	—	0.03	0.1	%
3) C	THD (C)	REC	C	1k	+10dB	—	0.05	0.2	%
S/N	SN (CCIR)	REC	C	—	Rg = 5kΩ (CCIR/ARM)	60	64	—	dB
REC-PB	CT-1	PB	OFF	1k	0dB	—	–80	–70	dB
PB-REC	CT-2	REC	OFF	1k	0dB	—	–87	–70	dB
REC ch to ch	CT-3	REC	OFF	1k	0dB	—	–73	–65	dB
REC OUT offset Voltage (OFF-C type)	Voff	REC	OFF ↓ C	—		–100	0	100	mV

* 0dB means the level which provides the Dolby level to recording output when NR is off.

Electrical Characteristics Measurement Circuit

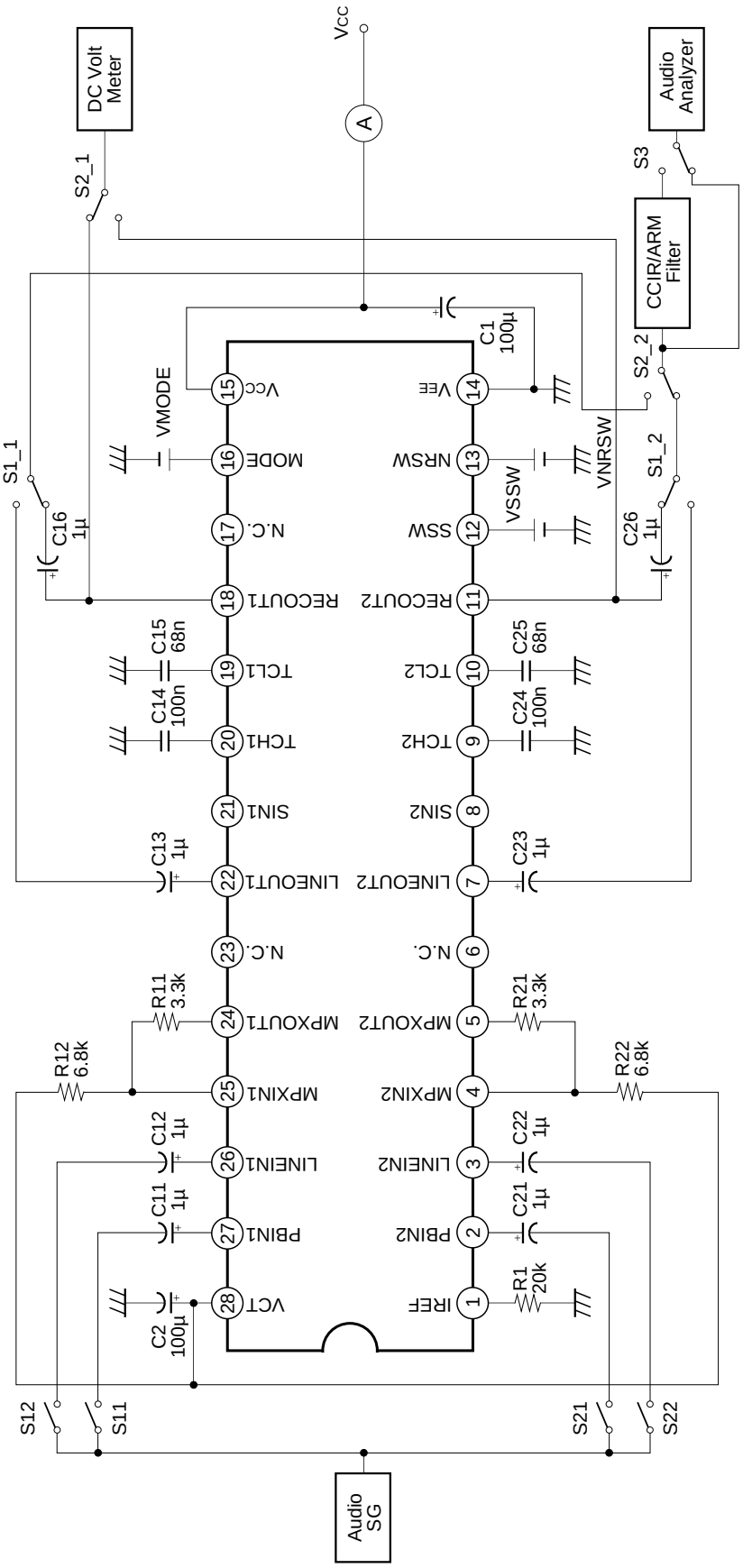

Application Circuit

Switchable Processor with Dual Power Supply

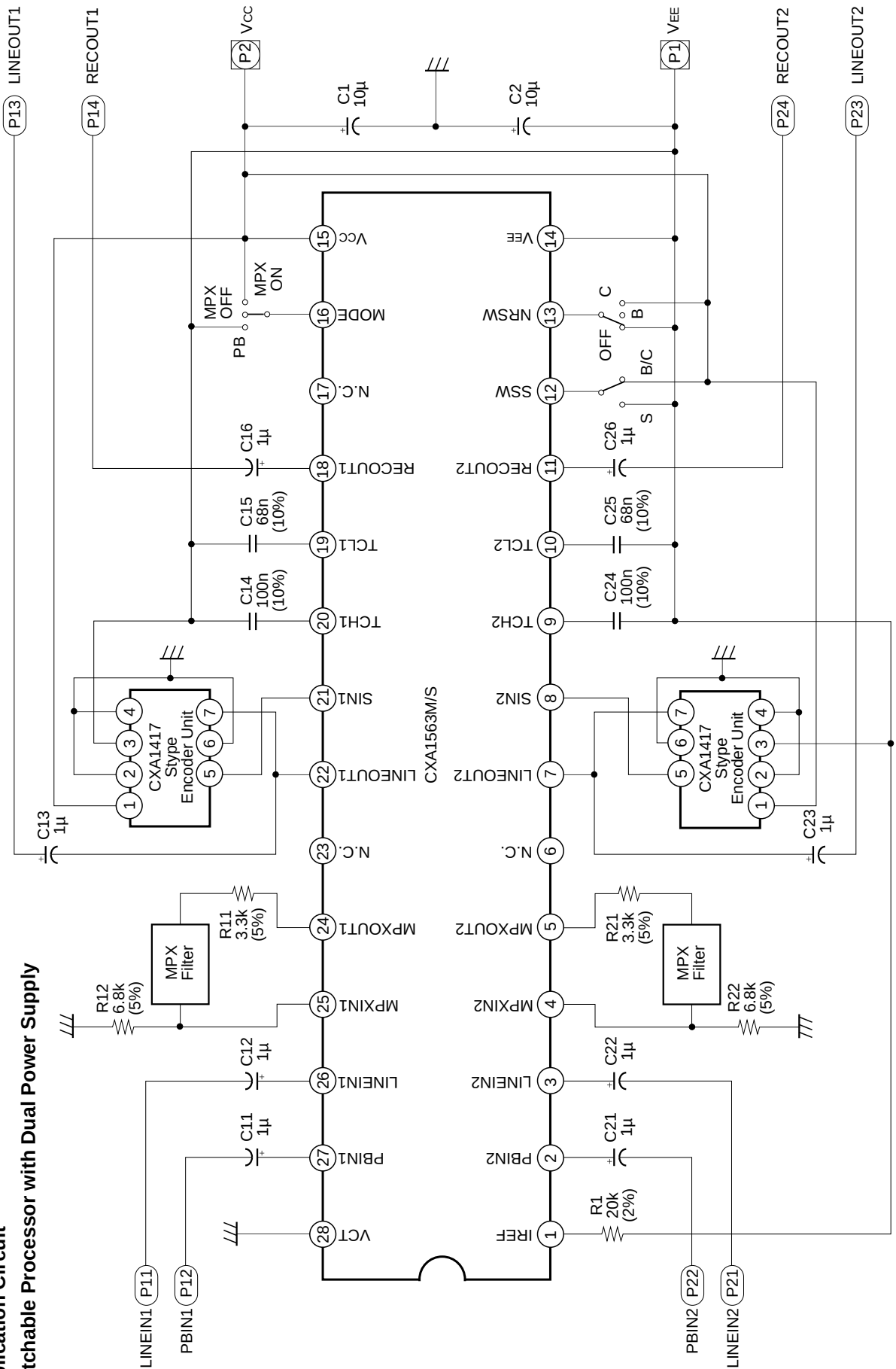

Application circuits shown are typical examples illustrating the operation of the devices. Sony cannot assume responsibility for any problems arising out of the use of these circuits or for any infringement of third party patent and other right due to same.

Note) Refer to the specifications of the CXA1417 for the S type encoder unit circuit diagram.
Resistor and capacitor tolerances are ±10% and ±20% respectively, unless otherwise specified.

Switch Processor with Single Power Supply

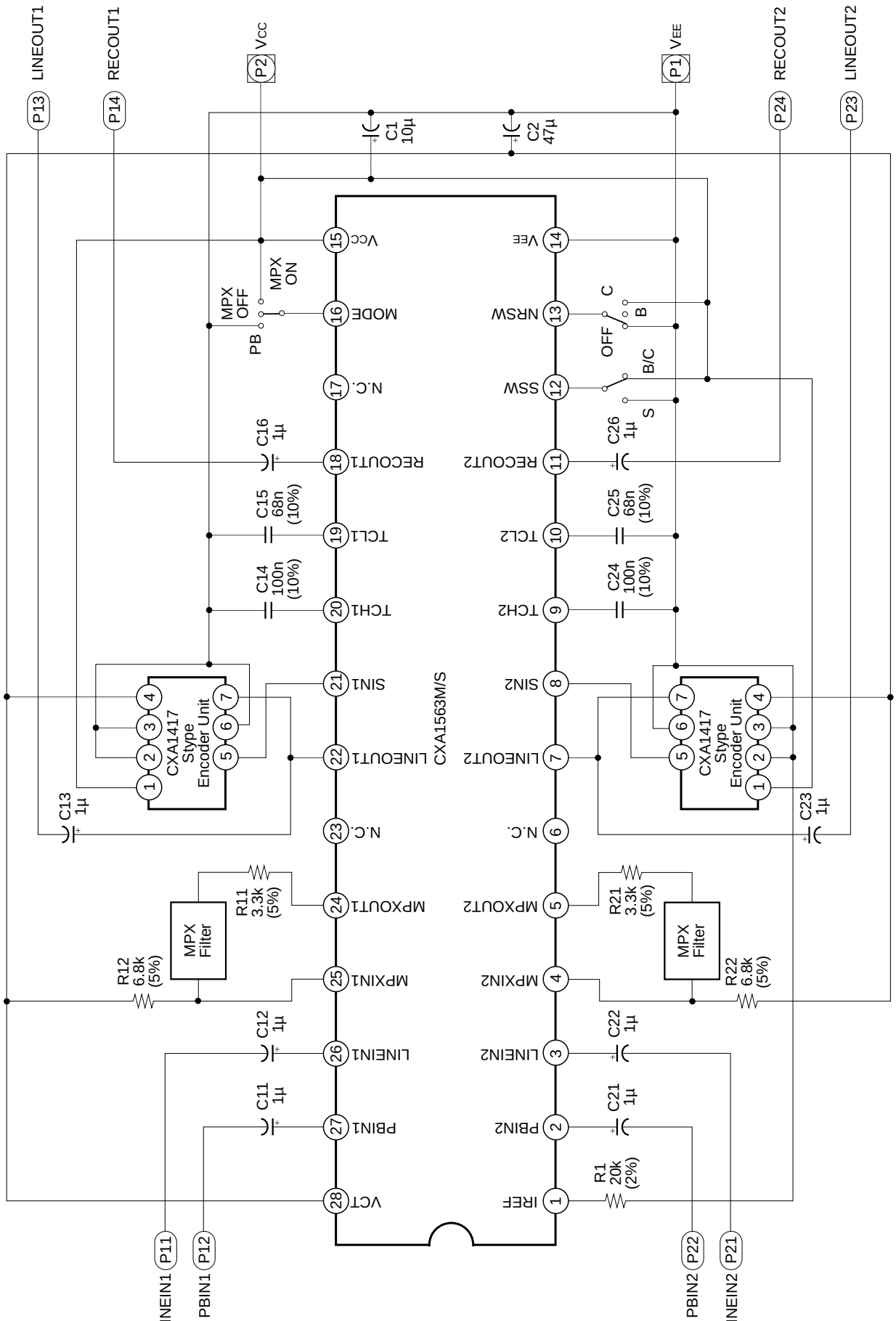

Application circuits shown are typical examples illustrating the operation of the devices. Sony cannot assume responsibility for any problems arising out of the use of these circuits or for any infringement of third party patent and other right due to same.

Note) Refer to the specifications of the CXA1417 for the S type encoder unit circuit diagram.
Resistor and capacitor tolerances are ±10% and ±20% respectively, unless otherwise specified.

Application Note

The CXA1563M/S is a dual channel Dolby B-C type NR IC with a built-in S type (CXA1417S/Q) switch. By using the CXA1563M/S in conjunction with two sets of the CXA1417S/Q encoder unit, a stereo Dolby B-C-S type NR system can be achieved.

1) Power Supply

The CXA1563M/S is designed to operate on either single or dual power supply.

For dual power supply, connect VCT (Pin 28) to GND, and V_{EE} (Pin 14) to the negative power supply.

For single power supply, connect V_{EE} (Pin 14) to GND. Vcc/2, generated from the internal circuit, is output to VCT (Pin 28). Connect a by-pass capacitor between this pin and GND.

The operating voltage range is ±3.5 to ±8.0V (7.0 to 16V), which satisfies the signal handling of 12dB specified by the Dolby Laboratories.

2) Supply Voltage of the CXA1417S/Q and the CXA1563M/S

(1) When both have split power supply
Set within the respective specified ranges.
CXA1417S/Q: ±AV
CXA1563M/S: ±BV

(2) When both have single power supply
Set at the same potential with the range specified for the CXA1417S/Q (9 to 13V).
CXA1417S/Q: AV
CXA1563M/S: BV

(3) Single and dual power supplies can not be used together.

3) Operation Mode Control

The CXA1563M/S has built-in electronic switches. The operations are controlled by the DC voltages of SSW (Pin 12), NRSW (Pin 13) and MODE (Pin 16) control pins. Table 1 shows the switching truth tables.

For single power supply, VH, VM, and VL correspond to Vcc, Vcc/2 and GND, respectively.

For dual power supply, VH, VM and VL correspond to Vcc, GND and V_{EE}, respectively.

Refer to "threshold" on the characteristics graph for the thresholds of the control voltages. NRSW (Pin 13) and MODE (Pin 16) control pins are connected to VCT via a 50kΩ resistor, so when the pin is open, VM condition results. SSW (Pin 12) control pin is of PNP base input, so the pin can be used as VH when it is open.

	VH	VM	VL
SSW	B-C type	—	S type
NRSW	C type	B type	NR OFF
MODE	MPX ON REC (Encode)	MPX OFF REC (Encode)	PB (Decode)

Table 1

SSW is taken precedence over NRSW, and NRSW is invalid when SSW is at Low.

4) Reference level

The CXA1563M/S Dolby level is –6dBm (388mVrms), and is measured at the recording output pin (REC OUT) in the NR OFF mode. The reference level of the recording input pin (LINE IN), playback input pin (PB IN) and line output pin (LINE OUT) are defined as the levels which provide Dolby level at the recording output pin in NR OFF mode.

5) MPX Filter

The CXA1563M/S provides an MPX (FM multiplex) filter ON/OFF function.

Connect the MPX filter between MPX IN (Pins 4 and 21) and MPX OUT (Pins 5 and 20). In MPX ON mode, the line input signal is fed to the NR processor via the MPX buffer amplifier and MPX filter. In MPX OFF mode, the signal bypasses the buffer amplifier and filter, and is fed directly to the NR processor. The MPX buffer amplifier gain is 10dB. The gain from LINE IN to LINE OUT is 19dB, and from MPX IN to LINE OUT it is 13dB, for a deviation of 6dB. This means that if a filter with insertion loss of 4dB is used, there is no fluctuation between MPX ON and MPX OFF.

6) Notes on Operation

If the CXA1563M/S is used without being connected to the CXA1417S/Q encoder unit, SIN (Pins 8 and 21) must be connected to GND for dual power supply, and to VCT for single power supply. There is a risk of misoperation if the SIN pins are left open during use.

Example of Representive Characteristics

Quiescent current consumption vs. Supply voltage

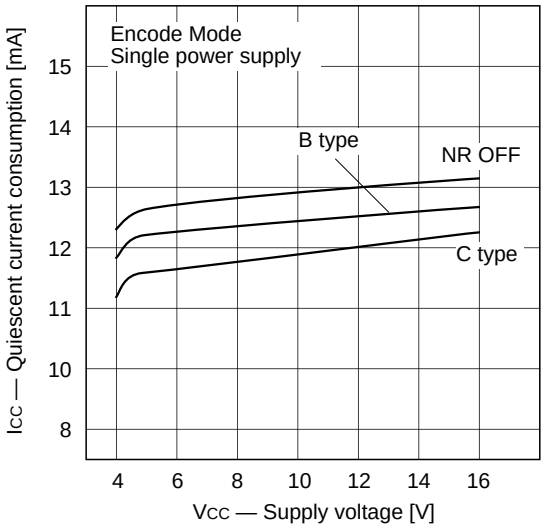

Current consumption vs. Input level

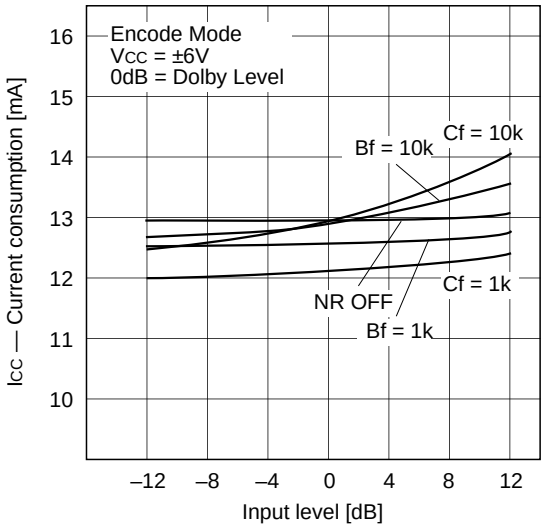

B type encode characteristics

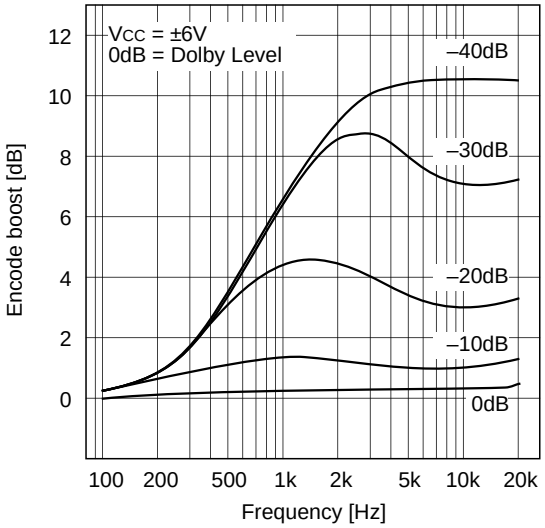

C type encode characteristics

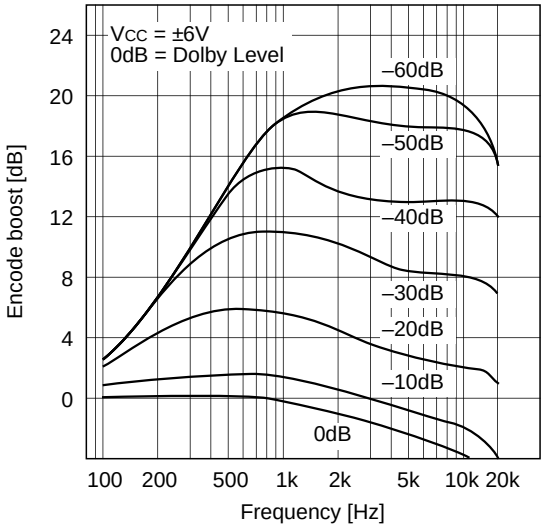

Signal handling

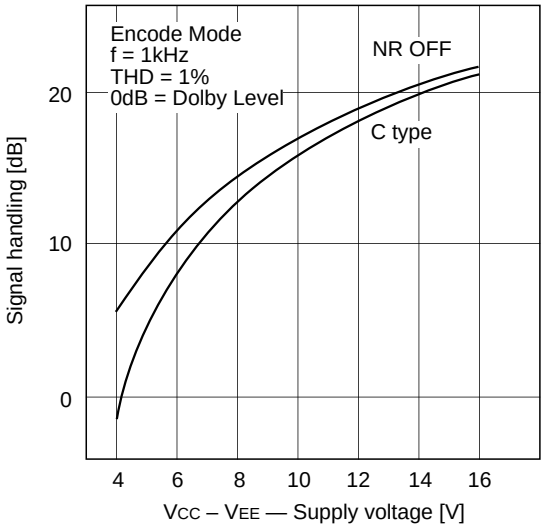

Load characteristics

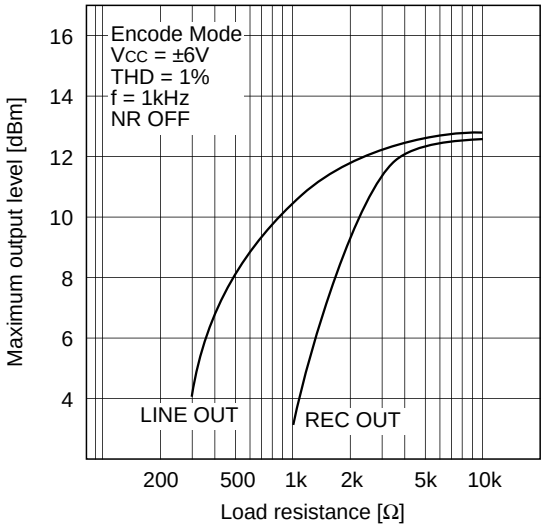

NR OFF total harmonic distortion-1

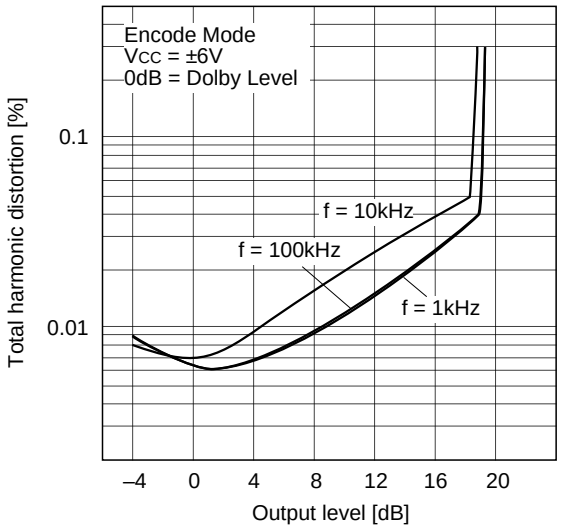

NR OFF total harmonic distortion-2

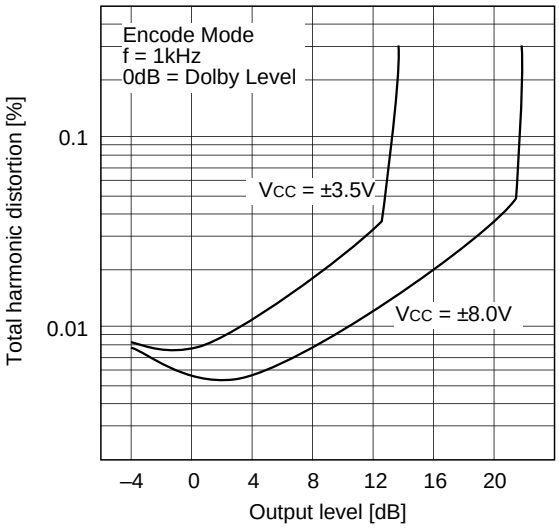

B type total harmonic distortion-1

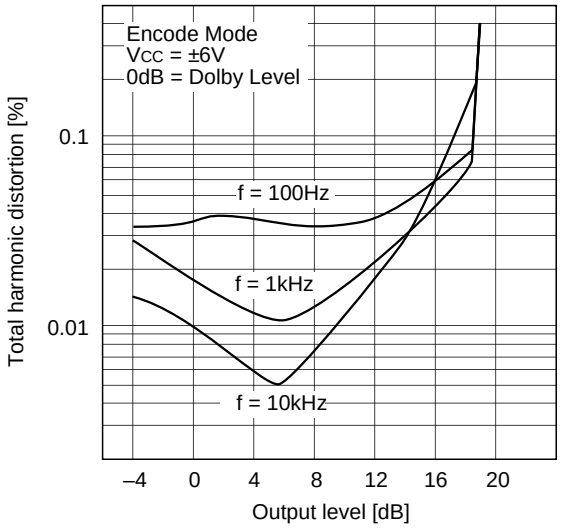

B type total harmonic distortion-2

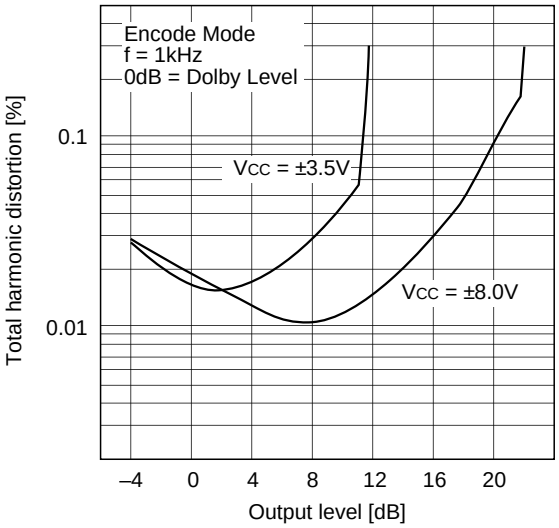

C type total harmonic distortion-1

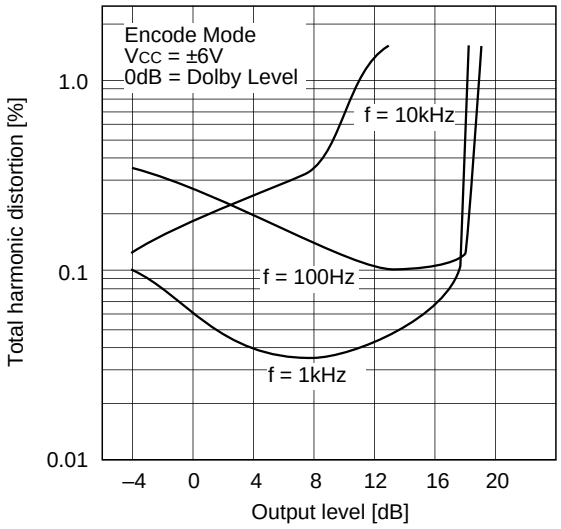

C type total harmonic distortion-2

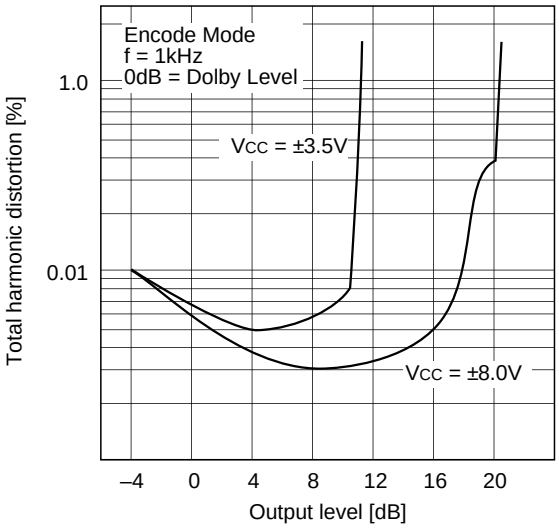

Cross talk

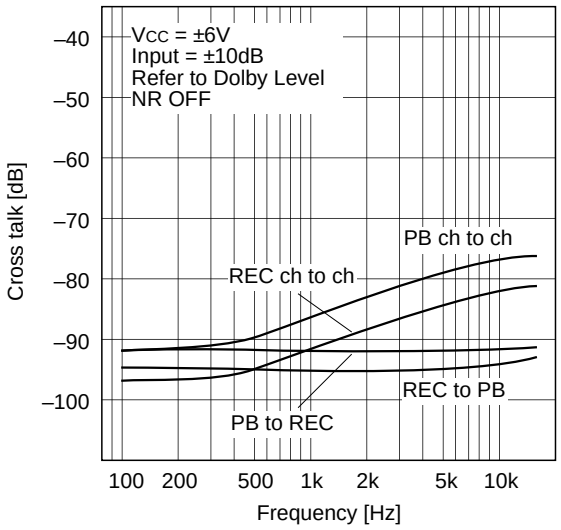

NR control threshold

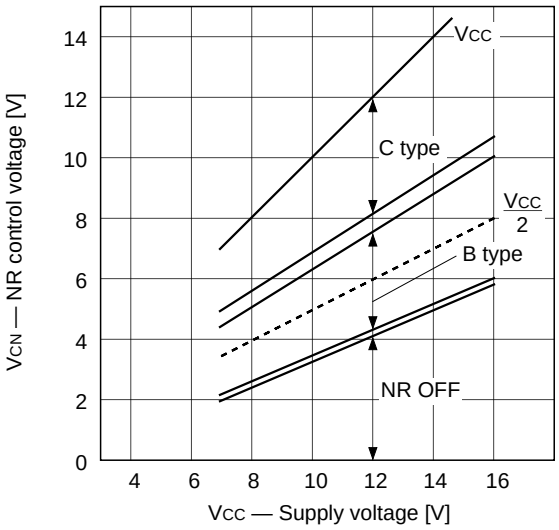

MODE control threshold

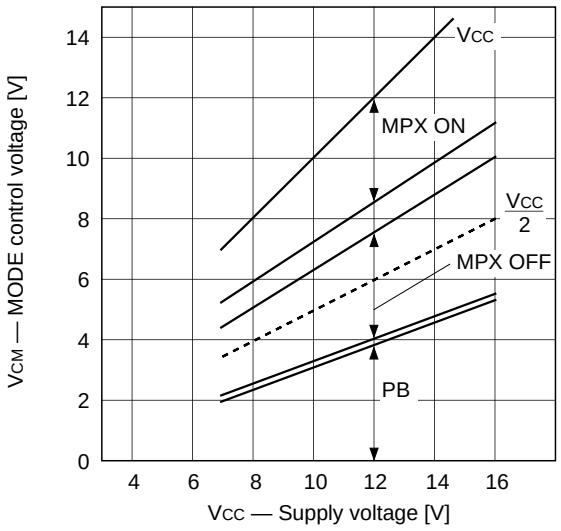

S-type switch control threshold

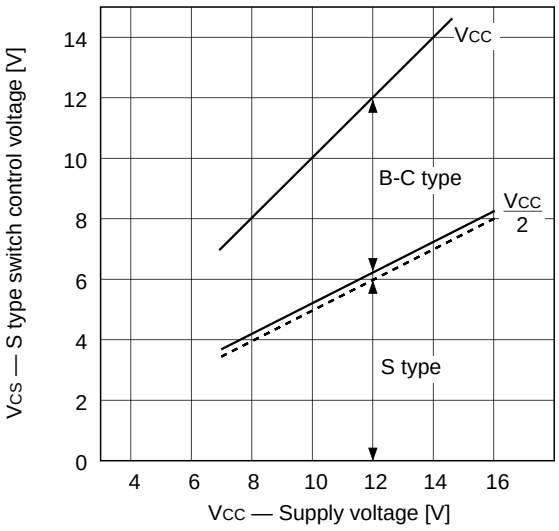

Package Outline Unit: mm

CXA1563M

28PIN SOP (PLASTIC) 375mil

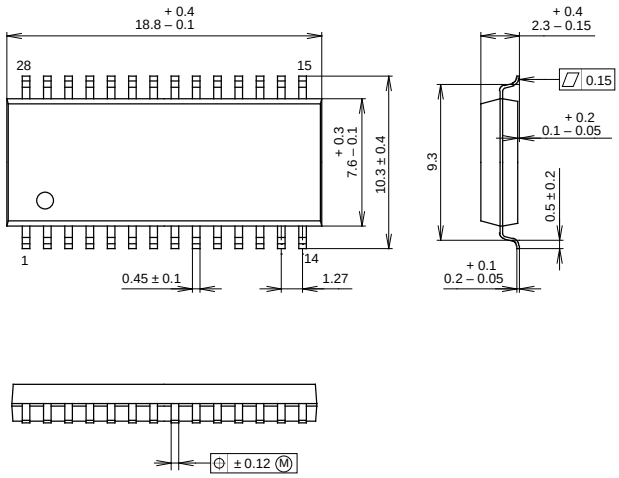

PACKAGE STRUCTURE

SONY CODE	SOP-28P-L04
EIAJ CODE	*SOP028-P-0375-D
JEDEC CODE	

PACKAGE MATERIAL	EPOXY / PHENOL RESIN
LEAD TREATMENT	SOLDER PLATING
LEAD MATERIAL	42 ALLOY
PACKAGE WEIGHT	0.7g

CXA1563S

28PIN SDIP (PLASTIC) 400mil

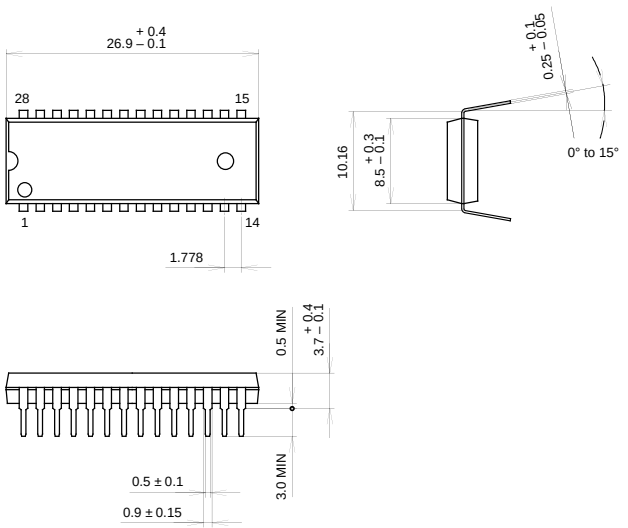

PACKAGE STRUCTURE

SONY CODE	SDIP-28P-01
EIAJ CODE	SDIP028-P-0400-A
JEDEC CODE	

PACKAGE MATERIAL	EPOXY RESIN
LEAD TREATMENT	SOLDER PLATING
LEAD MATERIAL	COPPER / 42 ALLOY
PACKAGE WEIGHT	1.7g