SONY

CXA1951Q

GPS Down Converter

Preliminary

Description

The CXA1951Q is an IC developed as a GPS down converter, featuring low current consumption and small package. This IC is suitable for the mobile GPS (Global Positioning System).

Features

- Includes all functions required for the GPS converter.
- Total gain: 110dB or more
- Operating supply voltage range: 2.7 to 5.5V
- Low current consumption:
  Icc = 30mA (Typ. at Vcc = 3V)
- Excellent temperature characteristics

Applications

GPS (Global Positioning System)

Structure

Bipolar silicon monolithic IC

40 pin QFP (Plastic)

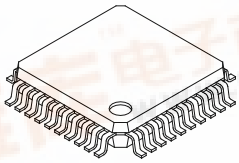

Absolute Maximum Ratings (Ta = 25°C)

• Supply voltage	V_{CC}	7.0	V
• Operating temperature	Topr	–40 to +85	°C
• Storage temperature	Tstg	–65 to +150	°C
• Allowable power dissipation	P_D	200	mW

Operating Conditions

Supply voltage	V_{CC}	2.7 to 5.5	V

Block Diagram and Pin Configuration

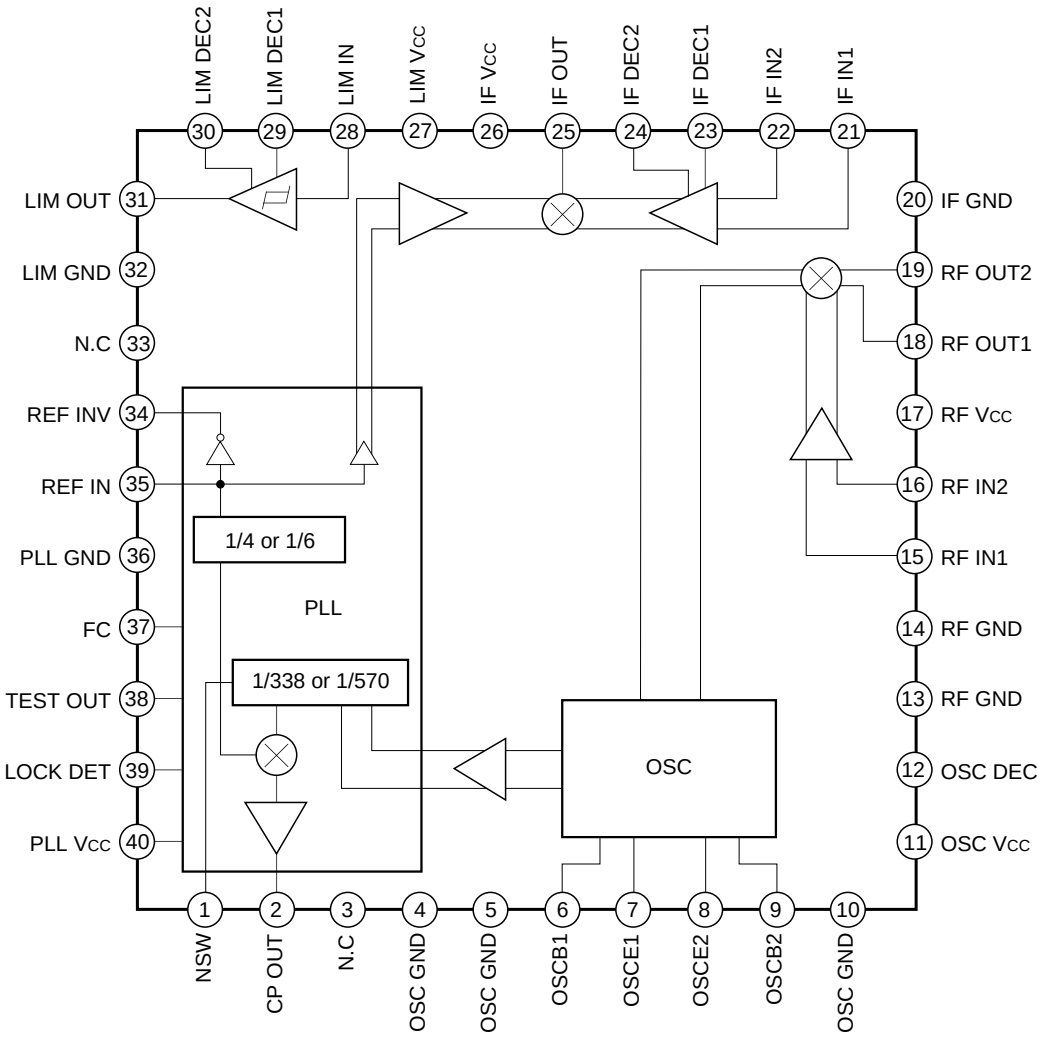

Electrical Characteristics (V_{CC} = 3V, Ta = 25°C)

Item		Symbol	Measurement conditions	Min.	Typ.	Max.	Unit
Current consumption		I_{CC}			30		mA
Front-end conversion gain		CGmix1	fin = 1575.42MHz		21		dB
IF amplifier band width		BWif			41		MHz
2nd mixer conversion gain		CGmix2			30		dB
Limiter gain		PGlim			67		dB
Limiter output level		Volim			0.8		Vp-p
1st IF output impedance		Zomix1			1		kΩ
1st IF input impedance		Zimix2			1		kΩ
2nd IF output impedance		Zomix2			1		kΩ
Limiter input impedance		Zilim			1		kΩ
FC	Input High current	I_{IH}			30		µA
	Input Low current	I_{IL}			30		µA
NSW	Input High current	IFCin			30		µA
	Input Low current	IFCin			30		µA
Charge pump output current	High	I_{OH}				–1	mA
	Low	I_{OL}		1			mA
LOCK DET output voltage	High	V_{OH}	I_{RL} = 0.1mA	2			V
	Low	V_{OL}	I_{RL} = 0.1mA			500	mV

Electrical Characteristics Measurement Circuit

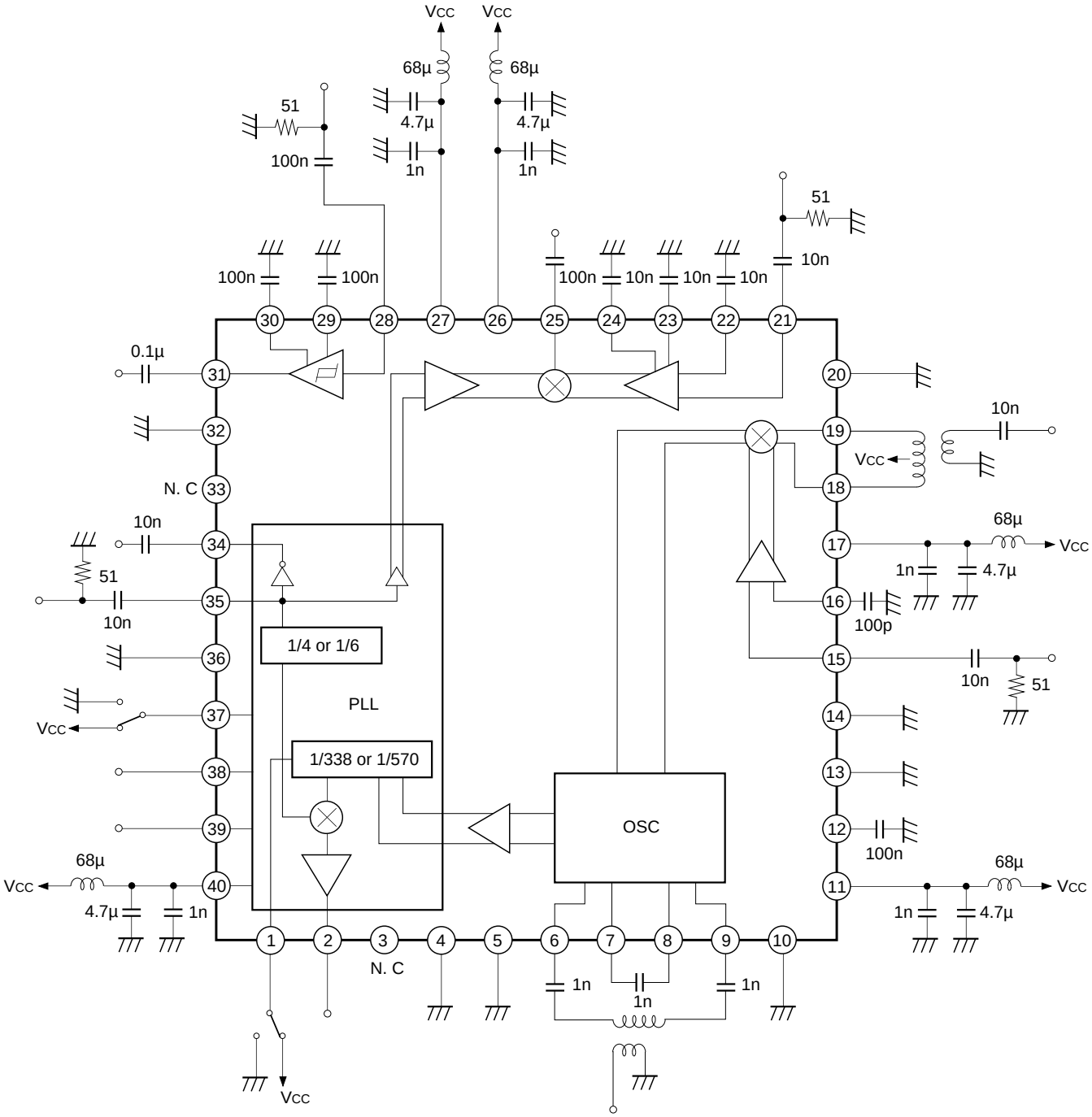

Application Circuit

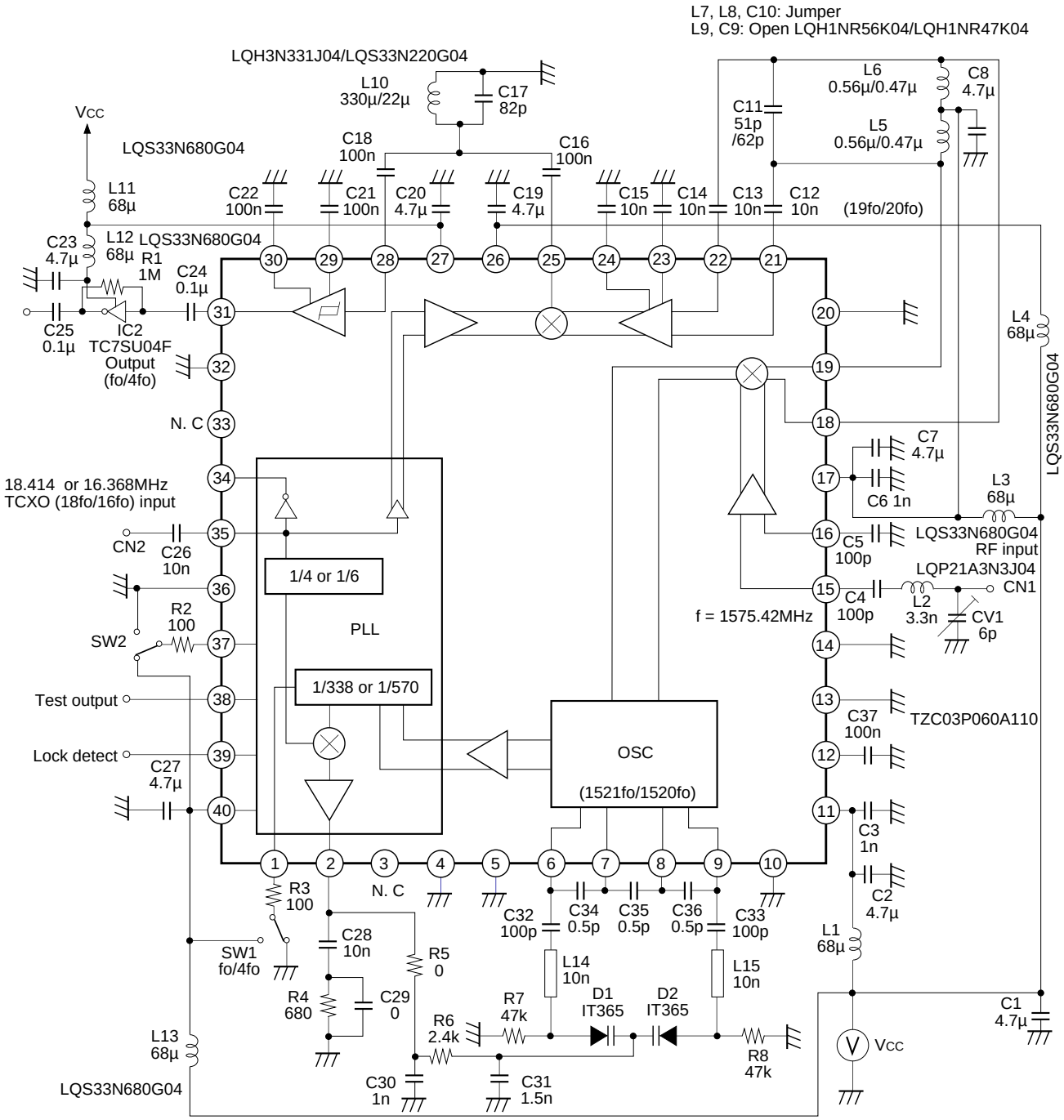

Notice: Two component values are indicated, the order is depending on the output frequency.
The first value is as for 'fo output' and the second value is as for '4fo output'.

Application circuits shown are typical examples illustrating the operation of the devices. Sony cannot assume responsibility for any problems arising out of the use of these circuits or for any infringement of third party patent and other right due to same.

Package Outline Unit: mm

40PIN QFP (PLASTIC)

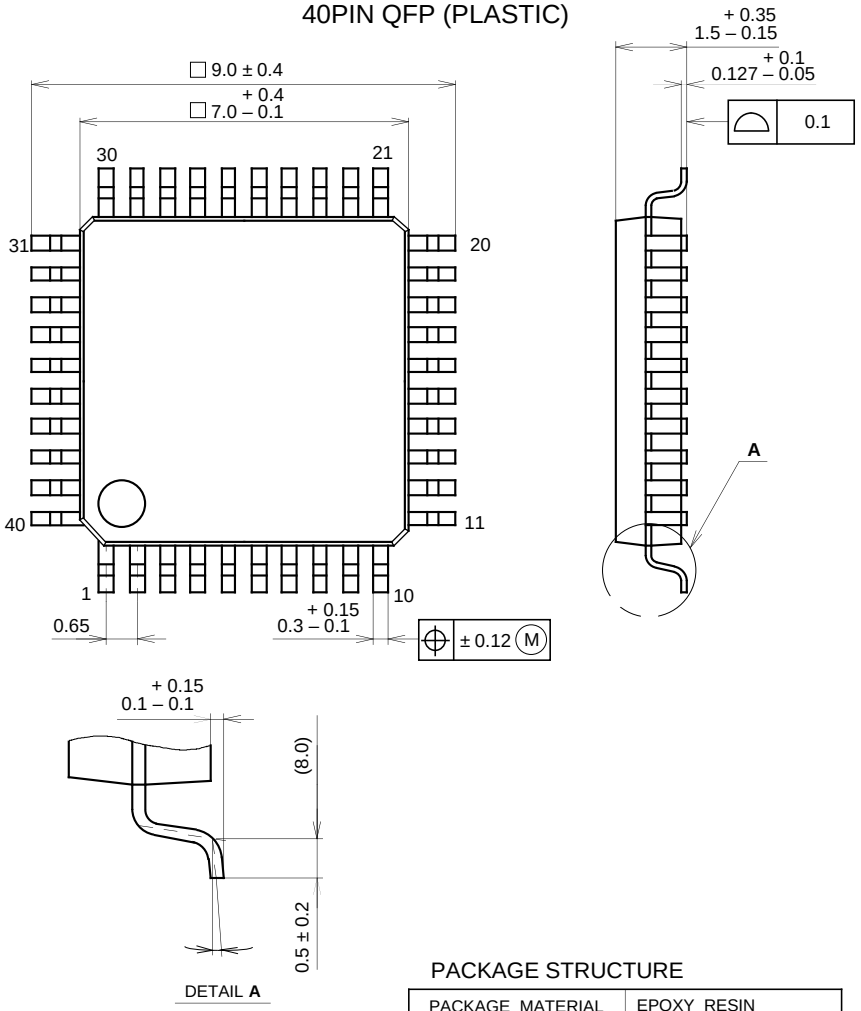

SONY CODE	QFP-40P-L01
EIAJ CODE	*QFP040-P-0707
JEDEC CODE	————

PACKAGE STRUCTURE

PACKAGE MATERIAL	EPOXY RESIN
LEAD TREATMENT	SOLDER / PALLADIUM PLATING
LEAD MATERIAL	COPPER / 42 ALLOY
PACKAGE WEIGHT	0.2g