SONY

CXA2547Q

2-band Electronic Volume

Description

The CXA2547Q is a 2-channel electronic volume IC. A 34-bit serial data input controls the level and characteristics of the output signal. It may be used in car stereos and general audio systems.

Features

- Loudness
- Volume control
  (from 0 dB to –80 dB, –∞ dB : Fine (1 dB-step)
  Coarse (8 dB-step)
- Balance
- Tone control
  (2-band, 2 dB-step from –15 dB to +15 dB)
- Fader
  2 dB-step to –20 dB, –25 dB, –35 dB, –45 dB, –60 dB, –∞ dB)
- Input and gain selector (4 channels)
- Serial data control (DATA, CLK, CE)
- Single 8 V power supply
- Zero-cross detection circuit
  (L/R independent operation for the volume block)
- Timer
- Power-off mute
- Countermeasure to the noise of the portable telephone

Structure

Bipolar silicon monolithic IC

48 pin QFP (Plastic)

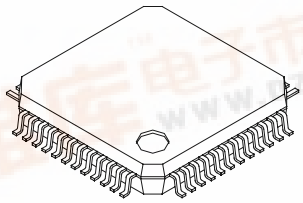

Absolute Maximum Ratings (Ta=25 °C)

• Supply voltage	V_{CC}	13	V
• Operating temperature	Topr	–40 to +85	°C
• Storage temperature	Tstg	–65 to +150	°C
• Allowable power dissipation	P_D	350 (Ta=85 °C)	mW

Recommended Operating Conditions

Supply voltage	V_{CC}	7 to 12	V

E97Y19B91-TE

Block Diagram and Pin Configuration

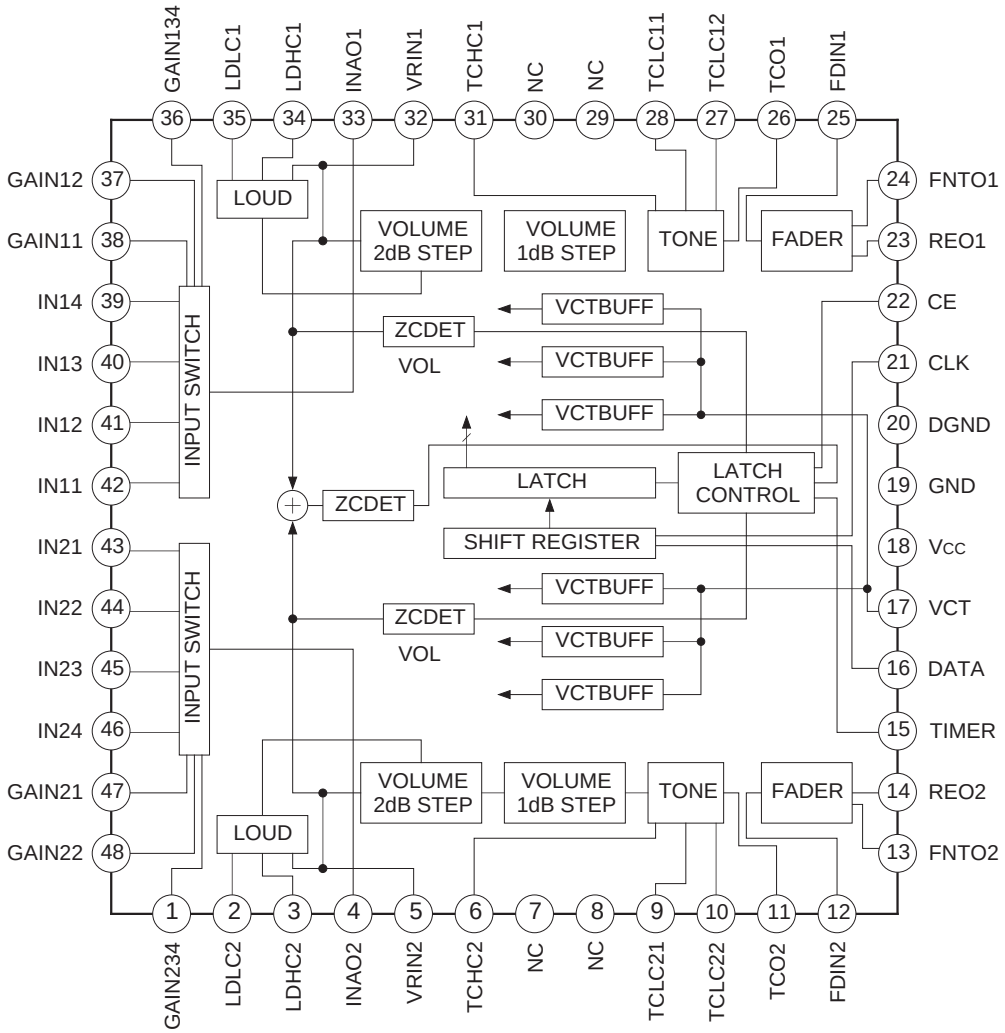

Pin Description

Pin No.	Symbol	I/O resistance Pin voltage	Equivalent circuit	Description
2 35	LDLC2 LDLC1	1.08 k VCT	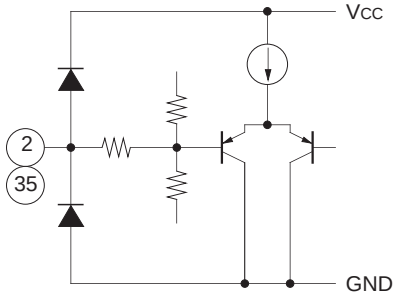	Sets loudness low cut-off frequency.
3 34	LDHC2 LDHC1	24.05 k VCT	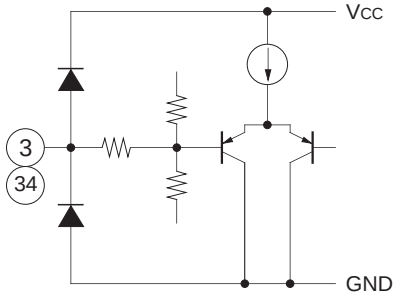	Set loudness high cut-off frequency
4 33	INAO2 INAO1	— VCT	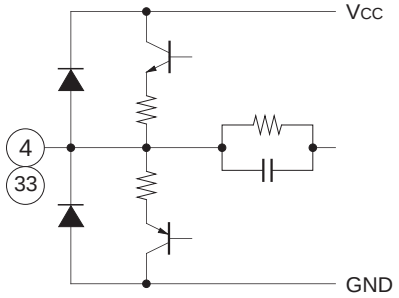	Input selector output
5 32	VRIN2 VRIN1	10 k VCT	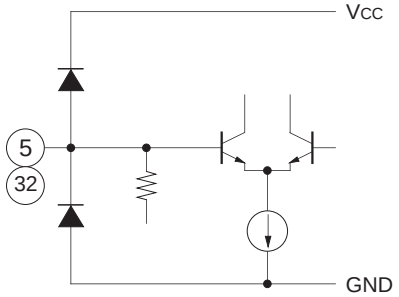	Volume input
6 31	TCHC2 TCHC1	5 k VCT	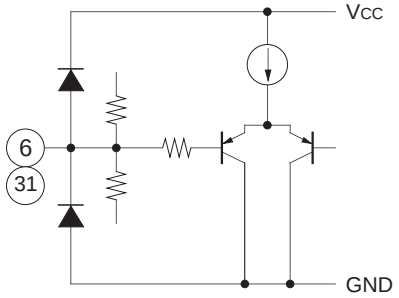	Set tone Treble frequency

Pin No.	Symbol	I/O resistance Pin voltage	Equivalent circuit	Description
7 30	NC	—		
8 29	NC	—		
9 28	TCLC21 TCLC11	8 k VCT	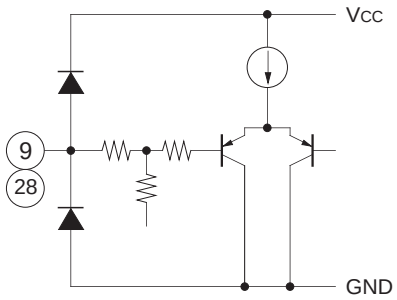	Sets tone Bass frequency
10 27	TCLC22 TCLC12	8 k VCT	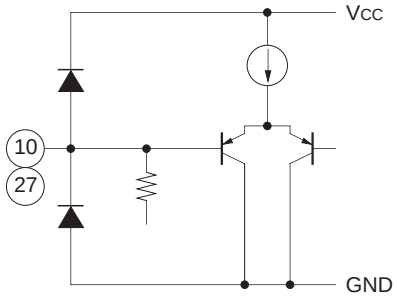	Sets tone Bass frequency
11 26	TCO2 TCO1	— VCT	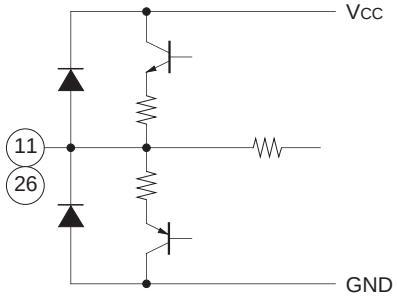	Tone control output

Pin No.	Symbol	I/O resistance Pin voltage	Equivalent circuit	Description
12 25	FDIN2 FDIN1	24 k VCT	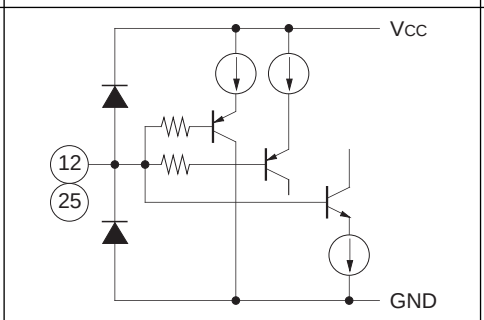	Fader input
13 24	REO2 REO1	— VCT	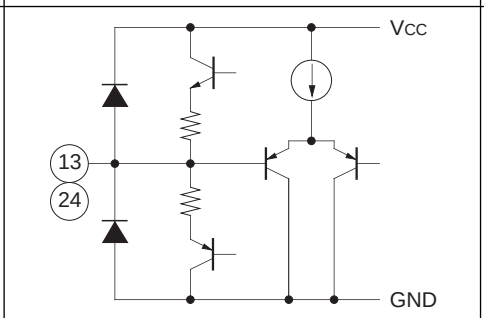	Rear output
14 23	FNT02 FNT01	— VCT	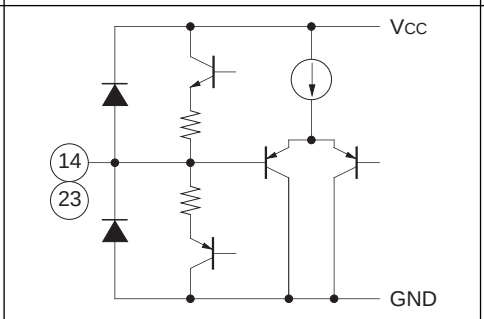	Front output
15	TIMER	≃ ∞ —	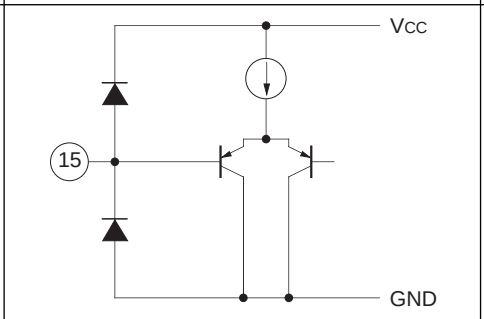	Timer constant setting
16	DATA	≃ ∞ —	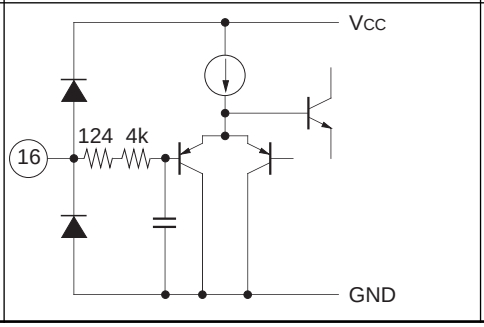	Serial data input

Pin No.	Symbol	I/O resistance Pin voltage	Equivalent circuit	Description
17	VCT	— VCT		1/2 Vcc
18	Vcc	— Vcc		Power supply input
19	GND	— Gnd		Ground
20	DGND	— —		Digital ground
21	CLK	≃ ∞ —	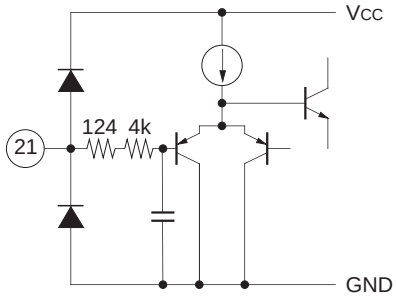	Serial clock input
22	CE	≃ 20k —	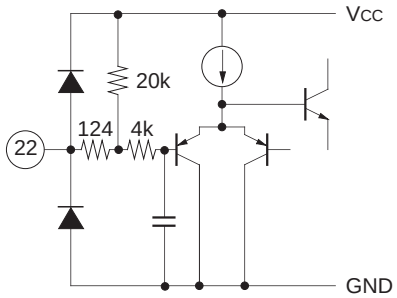	Latch enable input Take care to set the low level as the input impedance is low.
1 36 37 38 47 48	GAIN234 GAIN134 GAIN12 GAIN11 GAIN21 GAIN22	≃ ∞ VCT	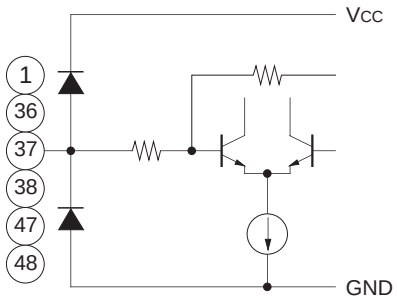	External gain setting for input amplifier
39 40 41 42 43 44 45 46	IN14 IN13 IN12 IN11 IN21 IN22 IN23 IN24	50 k VCT	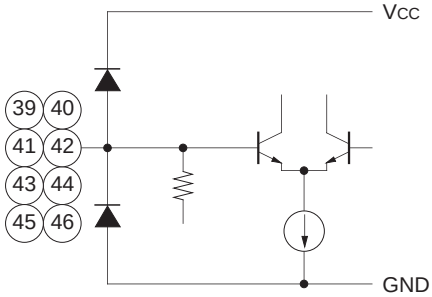	Signal input

Data Format

First Bit	D1	NOP
	D2	NOP
	D3 D4	ISW
	D5	LOUD
	D6 D7 D8 D9 D10 D11	VRC1
	D12	VRF1
	D13 D14 D15 D16 D17 D18	VRC2
	D19	VRF2
	D20 D21 D22 D23	TONE BASS
	D24 D25 D26 D27	NOP
	D28 D29 D30 D31	TONE TREBLE
	D32 D33 D34 D35	FADER
Last Bit	D36	FADER SELECT

ISW

Mode	D3	D4
IN14/IN24, GAIN134/GAIN234	1	1
IN13/IN23, GAIN134/GAIN234	1	0
IN12/IN22, GAIN12/GAIN22	0	1
IN11/IN21, GAIN11/GAIN21	0	0

LOUD

Mode	D5
ON	1
OFF	0

VRC1/VRC2

Output (dB)	D6/D13	D7/D14	D8/D15	D9/D16	D10/D17	D11/D18
0	1	1	1	1	1	1
–2	1	1	1	1	1	0
–4	1	1	1	1	0	1
–6	1	1	1	1	0	0
–8	1	1	1	0	1	1
–10	1	1	1	0	1	0
–12	1	1	1	0	0	1
–14	1	1	1	0	0	0
–16	1	1	0	1	1	1
–18	1	1	0	1	1	0
–20	1	1	0	1	0	1
–22	1	1	0	1	0	0
–24	1	1	0	0	1	1
–26	1	1	0	0	1	0
–28	1	1	0	0	0	1
–30	1	1	0	0	0	0
–32	1	0	1	1	1	1
–34	1	0	1	1	1	0
–36	1	0	1	1	0	1
–38	1	0	1	1	0	0
–40	1	0	1	0	1	1
–42	1	0	1	0	1	0
–44	1	0	1	0	0	1
–46	1	0	1	0	0	0
–48	1	0	0	1	1	1
–50	1	0	0	1	1	0
–52	1	0	0	1	0	1
–54	1	0	0	1	0	0
–56	1	0	0	0	1	1
–58	1	0	0	0	1	0
–60	1	0	0	0	0	1
–62	1	0	0	0	0	0
–64	0	1	1	1	1	—
–66	0	1	1	1	0	—
–68	0	1	1	0	1	—
–70	0	1	1	0	0	—
–72	0	1	0	1	1	—
–74	0	1	0	1	0	—
–76	0	1	0	0	1	—
–78	0	1	0	0	0	—
–80	0	0	1	—	—	—
– ∞	0	0	0	—	—	—

VRF1/VRF2

Output (dB)	D12/D19
0	1
–1	0

BASS/TREBLE

Output (dB)	D20/D28	D21/D29	D22/D30
15	1	1	1
12	1	1	0
10	1	0	1
8	1	0	0
6	0	1	1
4	0	1	0
2	0	0	1
0	0	0	0

BOOST/CUT

Mode	D23/D31
BOOST	1
CUT	0

FADER

Output (dB)	D32	D33	D34	D35
– ∞	1	1	1	1
–60	1	1	1	0
–45	1	1	0	1
–30	1	1	0	0
–25	1	0	1	1
–20	1	0	1	0
–18	1	0	0	1
–16	1	0	0	0
–14	0	1	1	1
–12	0	1	1	0
–10	0	1	0	1
–8	0	1	0	0
–6	0	0	1	1
–4	0	0	1	0
–2	0	0	0	1
0	0	0	0	0

FADER SELECT

Mode	D36
FRONT	1
REAR	0

RESET

Reset is performed automatically when power is first supplied to the IC; there is no reset pin.
The following table shows the respective statuses of various settings after a reset has been performed.

Mode	Set value
INPUT	1
VRC1	– ∞ dB
VRF1	–1 dB
VRC2	– ∞ dB
VRF2	–1 dB
LOUD	OFF
TONE BASS	0 dB
TONE MID	0 dB
TONE TREBLE	0 dB
FADER	0 dB, REAR

∗ Set all the transfer data to “0” for D24, D25, D26 and D27.

Timing Chart

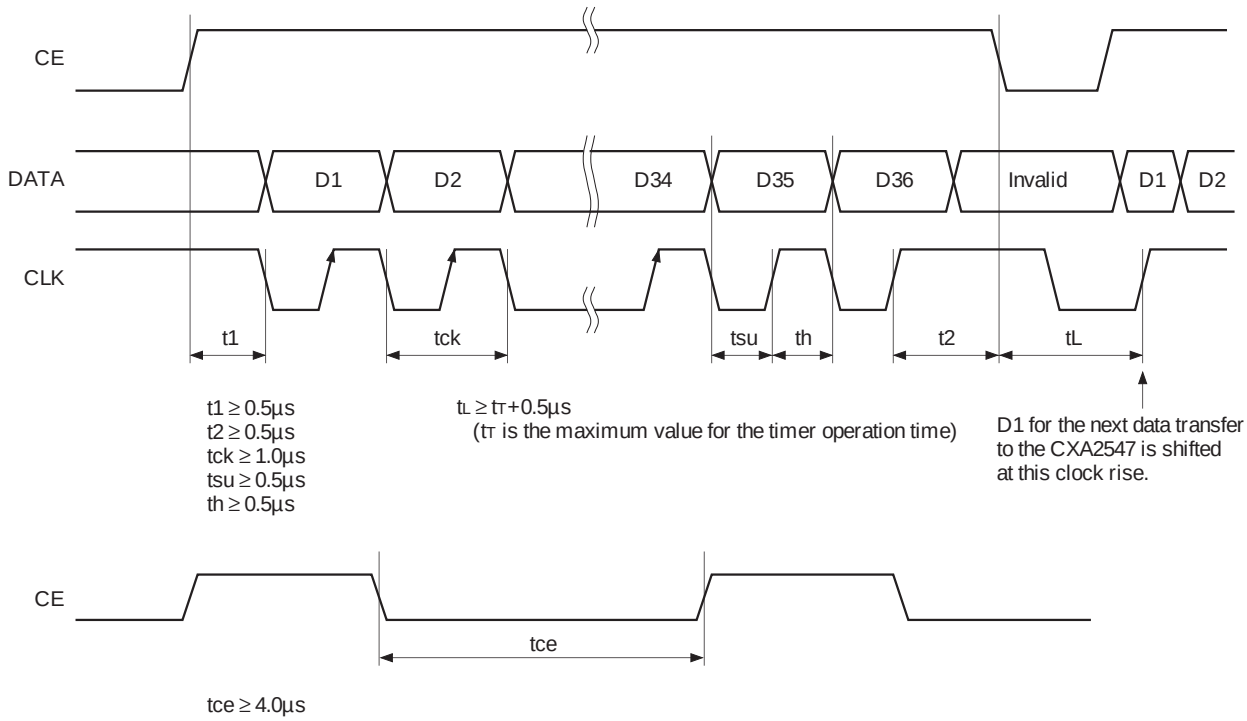

Timer Waiting Period Setting Chart (V_{CC}=7 to 12 V, operating temperature=–40 °C to 85 °C)

TIMER pin capacitance C	Waiting period		
	Min.	Typ.	Max.
C=100 pF	3 µs	5 µs	9 µs
C=0.001 µF	30 µs	50 µs	90 µs
C=0.01 µF	300 µs	500 µs	900 µs
C=0.1 µF	3 ms	5 ms	9 ms
C=1 µF	30 ms	50 ms	90 ms
C=10 µF	300 ms	500 ms	900 ms

Electrical Characteristics

V_{CC}=8 V, Ta=25 °C, input=0 dB unless otherwise specified

Item	Symbol	Conditions	Min.	Typ.	Max.	Unit
Current consumption	I_{CC}	No signal	—	25	35	mA
Total harmonic distortion	THD	1 kHz, 5 dBm output	—	0.004	0.01	%
Output noise voltage	Vn	Short-circuit at input, A weight	—	8	10	µVrms
Max. output voltage	Vom	1 kHz	8	—	—	dBm
Separation	CS	1 kHz	72	90	—	dB
Max. attenuation factor	ATTm		85	90	—	
Loudness LOW boost	Glb	100 Hz, VRC=–32 dB	13	15	17	
Loudness HIGH boost	Glh	10 kHz, VRC=–32 dB	5	6	7	
Max. Bass boost gain	Gbb		13	15	17	
Max. Bass cut gain	Gbc		13	15	17	
Max. Treble boost gain	Gtb		13	15	17	
Max. Treble cut gain	Gtc		13	15	17	
Input voltage HIGH	Vsh	DATA, CLK, CE	3	—	6	V
Input voltage LOW	Vsl	DATA, CLK, CE	0	—	1.5	
Input voltage range	Vin	IN11 to 14 IN21 to 24 VRIN1, 2 FDIN1, 2 The IC is not destroyed or does not operate abnormally.	1	—	V_{CC}–1	

Electrical Characteristics Measurement Circuit

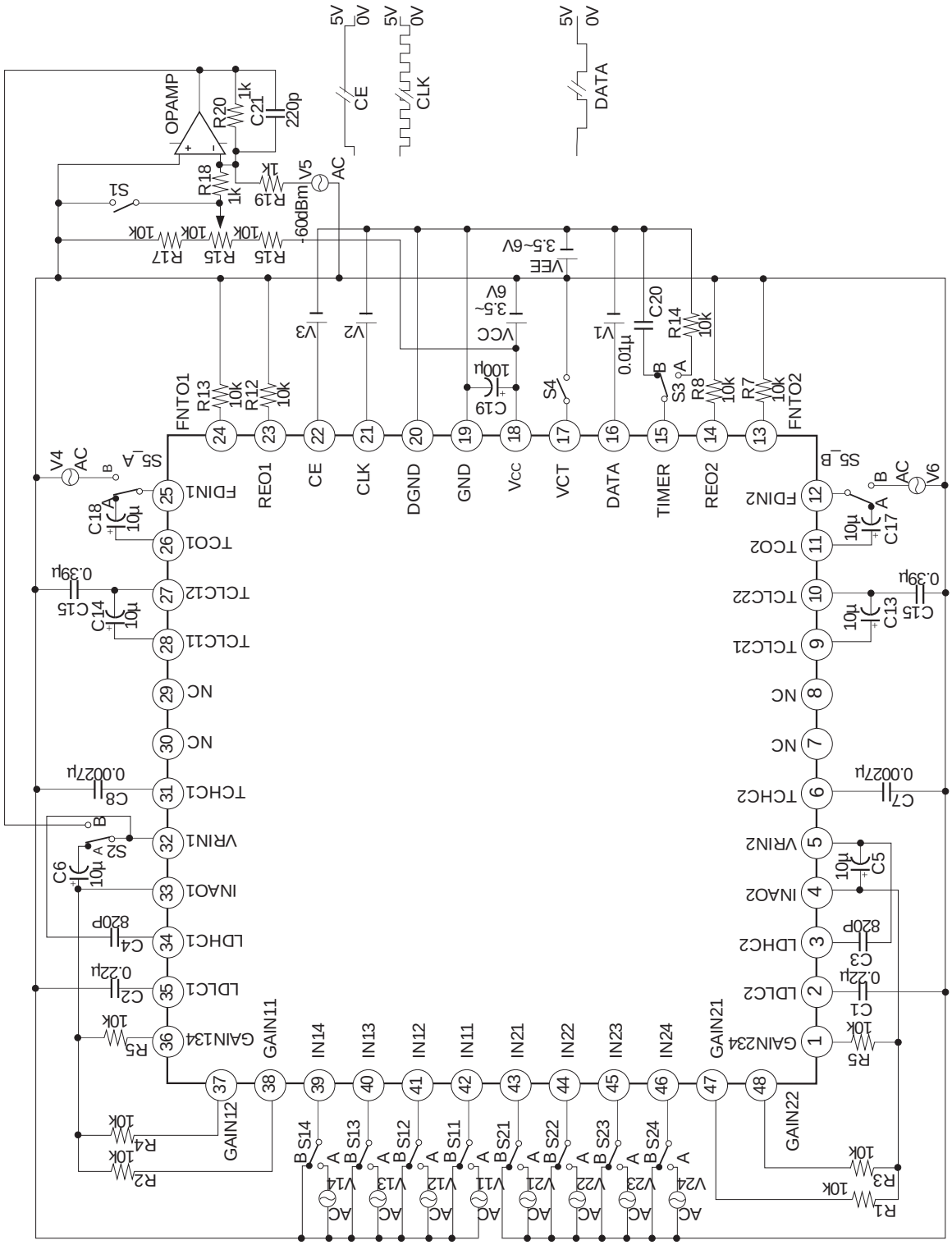

Application Circuit

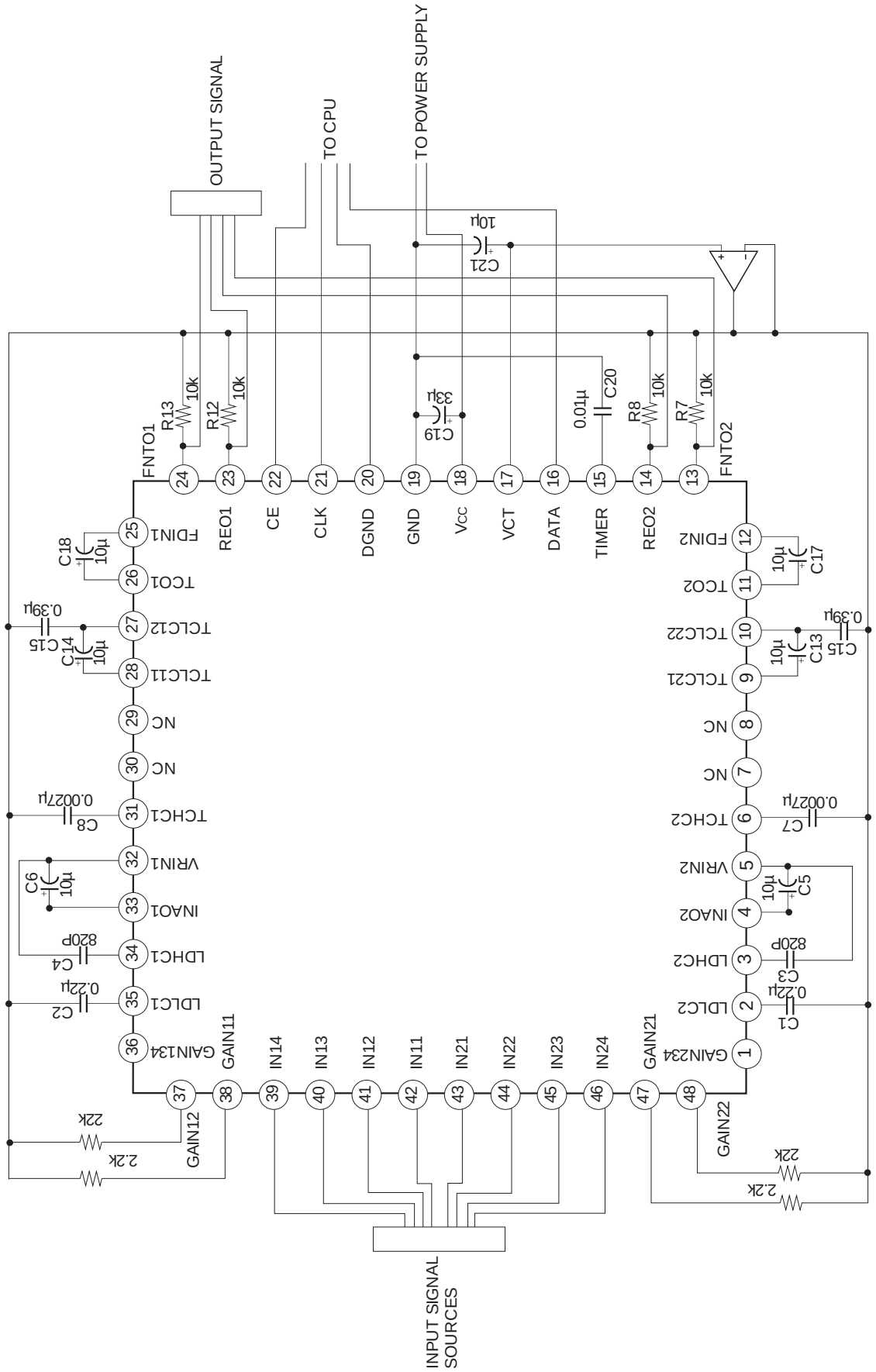

Application circuits shown are typical examples illustrating the operation of the devices. Sony cannot assume responsibility for any problems arising out of the use of these circuits or for any infringement of third party patent and other right due to same.

Description of Operation

(1) Input amplifier gain

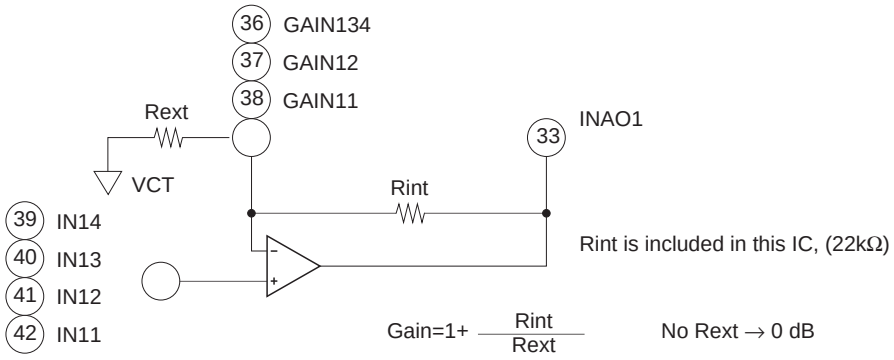

(2) LOUD

The loudness function achieves the necessary frequency response by using a filter as shown below. The resistors are built in this IC so that f_L and f_H can be set by selecting C1 and C2.

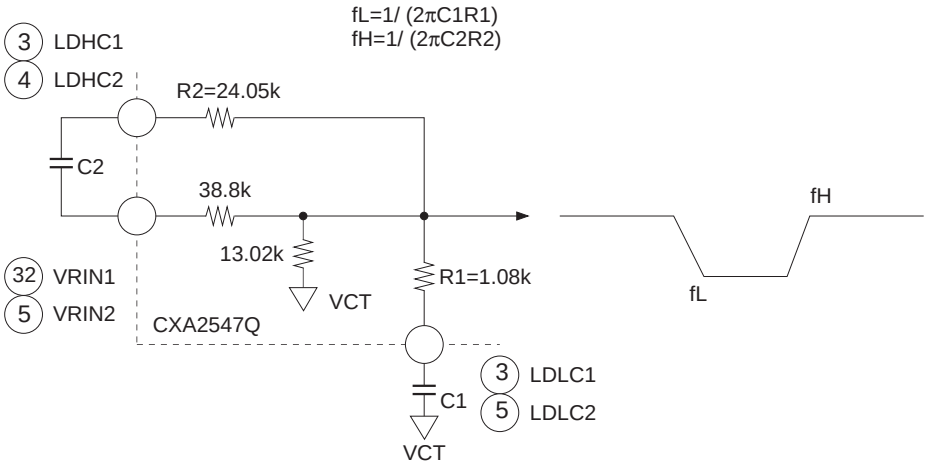

(3) Tone control

BASS : LPF

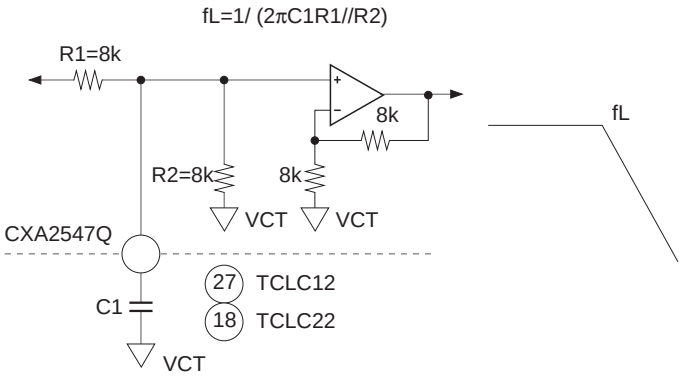

TREBLE : HPF

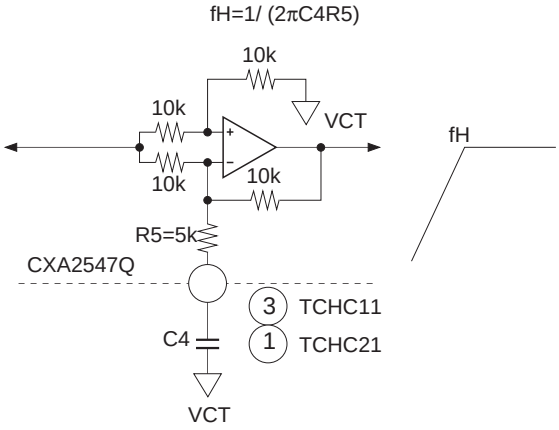

(4) Zero-cross detector and timer

A built-in zero-cross detection circuit is used to detect the zero-cross points of the input signal. When data arrived at the IC, they are executed at the next zero-cross point or when there is no input signal. This is to minimize 'click' noise during the transition of levels.

The timer circuit is added to ensure that the data is executed even when a zero-cross point is not detected after a certain period of time from the falling edge of the CE pulse.

Time constant=(0.5/10μ) × C [s]

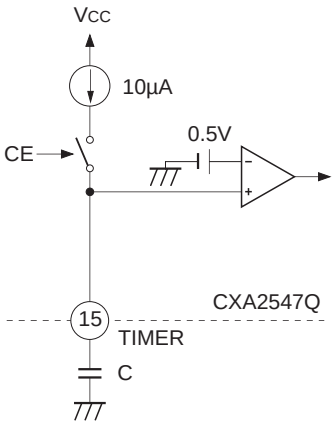

(5) VCT pin

The internal circuit of VCT pin has the following structure.
Insert a buffer when using the pin as a reference voltage for an external circuit.

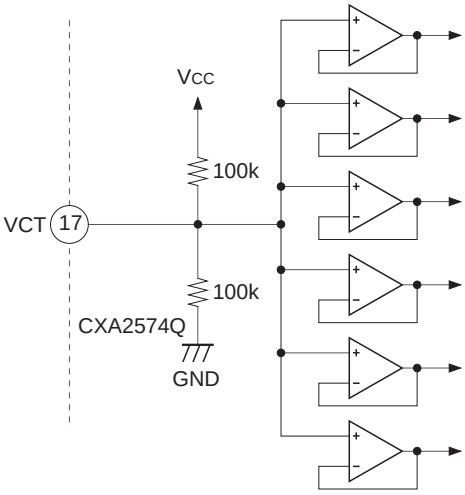

(6) Power-off mute

When VCC goes below 5 V, the output stage bias of the fader output pins FNTO1, FNTO2, REO1, and REO2 is turned off and the pins go to high impedance. This operation prevents popping noises caused by the output pin potential deviating from VCC/2 when the power is turned off.

Example of Representative Characteristics

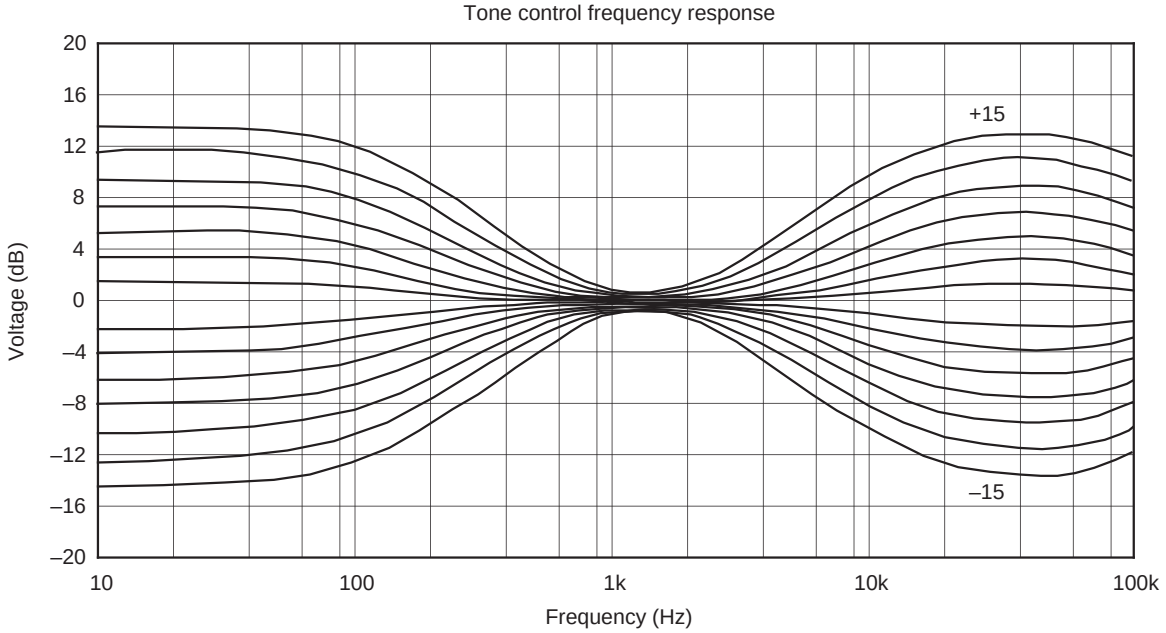

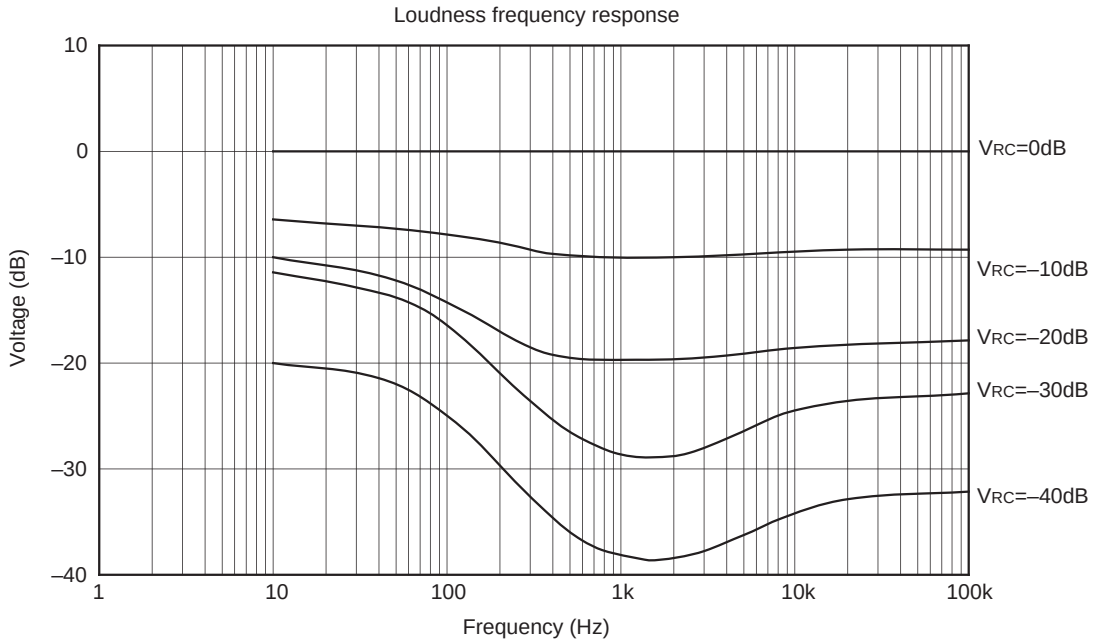

Package Outline Unit : mm

48PIN QFP (PLASTIC)

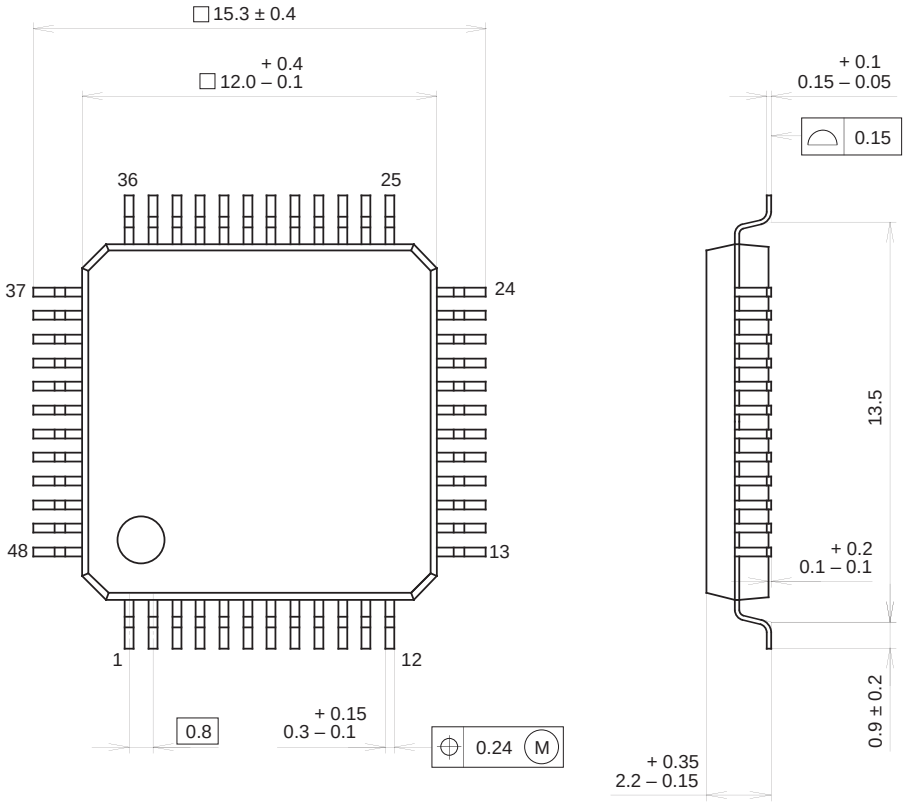

SONY CODE	QFP-48P-L04
EIAJ CODE	QFP048-P-1212
JEDEC CODE	————

PACKAGE STRUCTURE

PACKAGE MATERIAL	EPOXY RESIN
LEAD TREATMENT	SOLDER / PALLADIUM PLATING
LEAD MATERIAL	42/COPPER ALLOY
PACKAGE MASS	0.7g

NOTE : PALLADIUM PLATING
This product uses S-PdPPF (Sony Spec.-Palladium Pre-Plated Lead Frame).