XC6373 Series

Low Frequency PWM Controlled, Step - Up DC/DC Converters

TOREX

◆CMOS Low Power Consumption
◆Operating Voltage : 0.9V~10.0V
◆Output Voltage Range : 2.0V~7.0V
◆Output Voltage Accuracy : ±2.5%
◆Oscillator Frequency : 30kHz

■Applications

●Cellular phones, pagers
●Palmtops
●Cameras, video recorders
●Portable equipment

4

■General Description

The XC6373 is a group of PWM controlled step-up DC/DC converter ICs. The XC6373 series employs CMOS process and laser trimming technologies so as to attain low power and high accuracy.
The implemention of a new phase compensation circuit and a slow start function ensure excellent transient response and improved performance.
The series is particularly suited for use with pager applications because of their low power consumption and low noise characteristics.
Output voltage can be selected from 2.0V to 7.0V in 0.1V increments (accuracy; ±2.5%). Oscillator frequency is set at 30kHZ (±20%) so as to attain the lowest consumption current possible.
A step-up converter circuit can be configured using the XC6373 IC with a coil, a diode, and a capacitor.
5-pin packages, which are provided with either a CE (Chip enable) function that reduces power consumption during shut-down mode, or a VDD pin (separated power and voltage detect pins) are available.
SOT-89 small package.

■Features

Operating (start-up) voltage range : 0.9V~10V
Output voltage range : 2.0V~7.0V in 0.1V increments
Highly accurate : Set-up voltage ±2.5%
Oscillator frequency : 30kHz (±20%)
Maximum output current (Tr. Built-In) : 50mA (TYP.) @ VIN=3.0V, VOUT=5.0V ....Note (1)
Highly efficient (Tr. Built-In) : 82% (TYP.) @ VIN=3.0V, VOUT=5.0V ....Note (1)
Either chip enable or independent VOUT pin option is selectable for 5-pin package units.
Phase compensation and slow start-up circuits included.
Small Package : SOT-89 mini-power mold (3-pin, 5-pin)
Note (1): Performance depends on external components and PCB layout.

■Typical Application Circuit

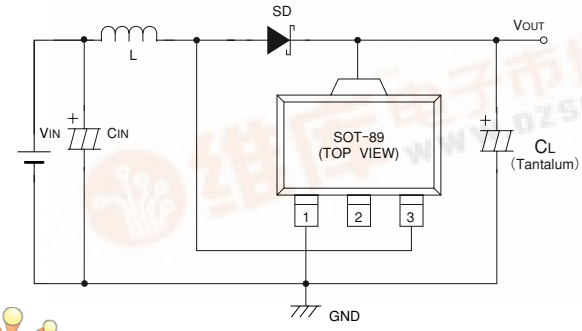

■Typical Performance Characteristic

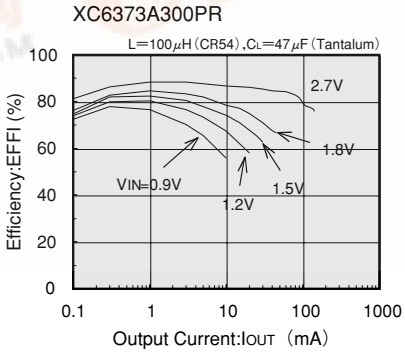

■Pin Configulation

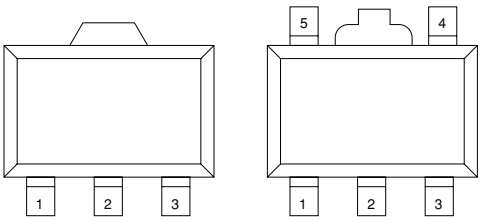

SOT-89
(TOP VIEW)

SOT-89-5
(TOP VIEW)

■Pin Assignment

(XC6373A)

PIN NUMBER	PIN NAME	FUNCTION
1	V_{SS}	Ground
2	V_{OUT}	Output voltage monitor, IC internal power supply
3	L_X	Switch

(XC6373C)

PIN NUMBER	PIN NAME	FUNCTION
5	V_{SS}	Ground
2	V_{OUT}	Output voltage monitor, IC internal power supply
4	L_X	Switch
3	CE	Chip enable
1	NC	No connection

(XC6373E)

PIN NUMBER	PIN NAME	FUNCTION
5	V_{SS}	Ground
2	V_{DD}	IC internal power supply
4	L_X	Switch
3	V_{OUT}	Output voltage monitor
1	NC	No connection

4

■Product Classification

●Selection Guide

PART TYPE	OPERATION MODE	PACKAGE	SWITCHING	ADDITIONAL FUNCTION	FEATURES
XC6373A	PWM	SOT-89	Built-in Transistor "Lx" lead		Switching transistor incorporated standard type. Low ripple and highly efficient from low current to high current.
XC6373C	PWM	SOT-89-5	Built-in Transistor "Lx" lead	Chip Enable(CE) Function	Stand-by (CE) capability added version to the XC6373A. Stand-by current; 0.50μA max.
XC6373E	PWM	SOT-89-5	Built-in Transistor "Lx" lead	Separated "V_{DD}" and "V_{OUT}"	Individual power supply and set-up voltage sensing leads are available.

●Ordering Information

XC6373①②③④⑤⑥

XC6373 Series PWM Controlled

①	A	3-pin.	Built-in switching transistor
	C	Stand-by capability.	Built-in switching transistor
	E	Separated V_{DD} and V_{OUT}	Built-in switching transistor
②③		Output Voltage (e.g.,V_{OUT}=3.5V ➔ ②=3, ③=5)	
④⑤	O	OSC Frequency	30kHz
	P	Package ①=A ➔ SOT-89 ①=C,E ➔ SOT-89-5	
⑥	R	Embossed tape: Standard Feed	
	L	Embossed tape: Reverse Feed	

■Packaging Information

●SOT-89

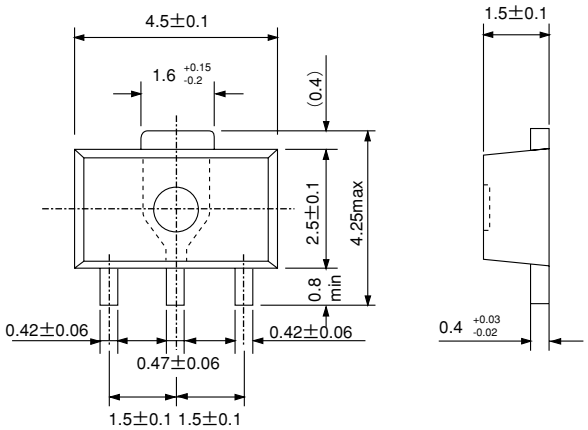

●SOT-89-5

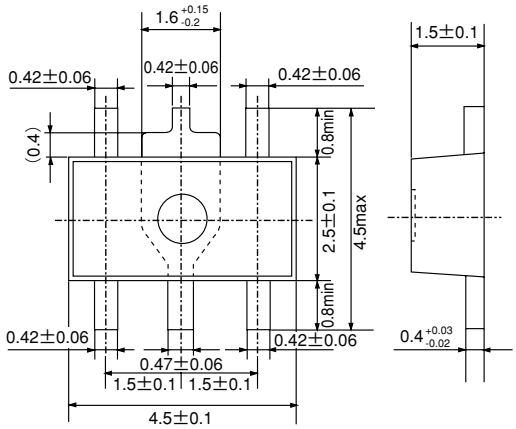

■Marking

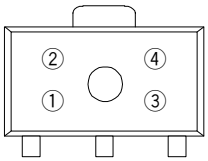

SOT-89
(TOP VIEW)

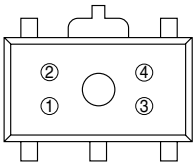

SOT-89-5
(TOP VIEW)

① Represents the Product Classification

DESIGNATOR	FUNCTION		PRODUCT NAME
A	—	Built-in Transistor	XC6373A＊＊＊P＊
A	CE	Built-in Transistor	XC6373C＊＊＊P＊
S	Separated VDD and VOUT	Built-in Transistor	XC6373E＊＊＊P＊

4

② Represents the integer of the Output Voltage and Oscillator Frequency

INTEGER OF THE OUTPUT VOLTAGE	OSCILLATOR FREQUENCY (PRODUCT NAME)
	30kHz (XC6373＊＊＊0P＊)
1.X	$\overline{B}$
2.X	$\overline{C}$
3.X	$\overline{D}$
4.X	$\overline{E}$
5.X	$\overline{F}$
6.X	$\overline{H}$
7.X	$\overline{K}$

③ Represents the decimal number of the Output Voltage and Oscillator Frequency

THE DECIMAL NUMBER OF OUTPUT VOLTAGE	OSCILLATOR FREQUENCY (PRODUCT NAME)
	30kHz (XC6373＊＊＊0P＊)
X.0	0
X.1	1
X.2	2
X.3	3
X.4	4
X.5	5
X.6	6
X.7	7
X.8	8
X.9	9

④ Denotes the production lot number
0 to 9, A to Z repeated(G.I.J.O.Q.W excepted)

■Block Diagram

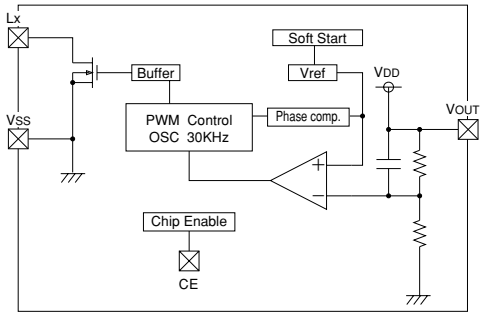

Note: The CE pin is only used with the XC6373C.

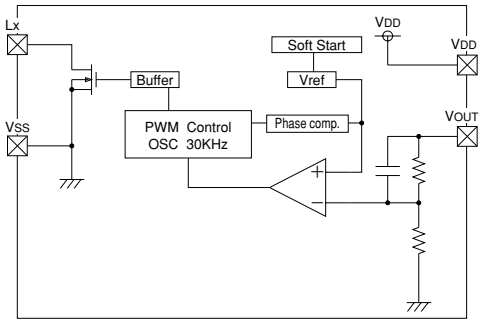

Note: The VDD pin is only used with the XC6373E.

■Absolute Maximum Ratings

Ta=25°C

PARAMETER	SYMBOL	CONDITIONS	UNIT
VOUT Input Voltage	VOUT	12	V
Lx Pin Voltage	VLx	12	V
Lx Pin Current	ILx	400	mA
Continuous Total Power Dissipation	Pd	500	mW
Operating Ambient temperature	Topr	−30 ~ +80	°C
Storage Temperature	Tstg	−40 ~ +125	°C

■Electrical Characteristics

XC6373A300PR V_{OUT}=3.0V, F_{OSC}=30kHz Ta=25°C

PARAMETER	SYMBOL	CONDITIONS	MIN	TYP	MAX	UNIT
Output Voltage	V_{OUT}		2.925	3.000	3.075	V
Maximum Input Voltage	V_{IN}		10			V
Operation Start-up Voltage	V_{ST1}	External Components Connected. I_{OUT}=1mA.			0.90	V
Oscillation Start-up Voltage	V_{ST2}	No external components. Apply voltage to V_{OUT}. Lx :10kΩ pull-up to 5V.			0.80	V
Supply Current 1	I_{DD1}	Same as V_{ST2}. Apply output voltage × 0.95 to V_{OUT}.		13.1	21.9	μA
Supply Current 2	I_{DD2}	Same as V_{ST2}. Apply output voltage × 1.1 to V_{OUT}.		3.9	7.9	μA
Lx Switch-On Resistance	R_{SWON}	Same as I_{DD1}. V_{Lx}=0.4V.		3.4	5.7	Ω
Lx Leak Current	I_{LXL}	No external components. V_{OUT}=V_{Lx}=10V.			1.0	μA
Oscillator Frequency	F_{OSC}	Same as I_{DD1}. Measuring of Lx waveform.	24	30	36	kHz
Maximum Duty Ratio	MAXDTY	Same as I_{DD1}. Measuring of Lx waveform.	80	87	92	%
Efficiency	EFFI			77		%
Slow-Start Time	T_{SS}		4.0	10.0	20.0	mS

Measuring conditions: Unless otherwise specified, V_{IN}=V_{OUT} × 0.6,I_{OUT}=15mA. See Typical Application Circuits, Fig.1.

XC6373A330PR V_{OUT}=3.3V, F_{OSC}=30kHz Ta=25°C

PARAMETER	SYMBOL	CONDITIONS	MIN	TYP	MAX	UNIT
Output Voltage	V_{OUT}		3.128	3.300	3.383	V
Maximum Input Voltage	V_{IN}		10			V
Operation Start-up Voltage	V_{ST1}	External Components Connected. I_{OUT}=1mA.			0.90	V
Oscillation Start-up Voltage	V_{ST2}	No external components. Apply voltage to V_{OUT}. Lx 10kΩ pull-up to 5V.			0.80	V
Supply Current 1	I_{DD1}	Same as V_{ST2}. Apply output voltage × 0.95 to V_{OUT}.		14.1	23.5	μA
Supply Current 2	I_{DD2}	Same as V_{ST2}. Apply output voltage × 1.1 to V_{OUT}.		4.0	8.1	μA
Lx Switch-On Resistance	R_{SWON}	Same as I_{DD1}. V_{Lx}=0.4V.		3.4	5.7	Ω
Lx Leak Current	I_{LXL}	No external components. V_{OUT}=V_{Lx}=10V.			1.0	μA
Oscillator Frequency	F_{OSC}	Same as I_{DD1}. Measuring of Lx waveform.	24	30	36	kHz
Maximum Duty Ratio	MAXDTY	Same as I_{DD1}. Measuring of Lx waveform.	80	87	92	%
Efficiency	EFFI			77		%
Slow-Start Time	T_{SS}		4.0	10.0	20.0	mS

Measuring conditions: Unless otherwise specified, V_{IN}=V_{OUT} × 0.6, I_{OUT}=16.5mA. See Typical Application Circuits, Fig.1.

■Typical Application Circuits

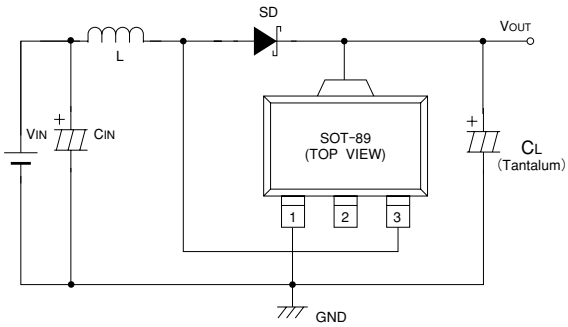

L : 100μH (SUMIDA, CR-54)
SD : MA2Q735 (Schottky diode; MATSUSHITA)
CL : 16V 47μF (Tantalum capacitor; NICHICON, MCE)
CIN : 16V220μF (Aluminium Electrolytic Capacitor)

Fig.1 XC6373A Application

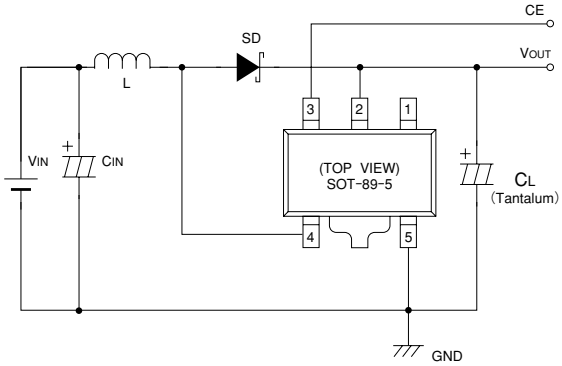

L : 100μH (SUMIDA, CR-54)
SD : MA2Q735 (Schottky diode; MATSUSHITA)
CL : 16V 47μF (Tantalum capacitor; NICHICON, MCE)
CIN : 16V220μF (Aluminium Electrolytic Capacitor)

Fig.3 XC6373C Application

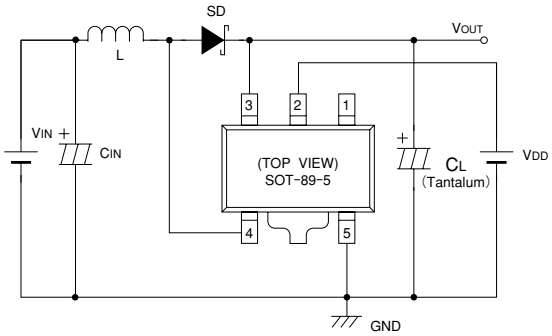

L : 100μH (SUMIDA, CR-54)
SD : MA2Q735 (Schottky diode; MATSUSHITA)
CL : 16V 47μF (Tantalum capacitor; NICHICON, MCE)
CIN : 16V220μF (Aluminium Electrolytic Capacitor)

Fig.5 XC6373E Application

■Typical Performance Characteristics

(1) OUTPUT VOLTAGE vs. OUTPUT CURRENT
Topr=25°C

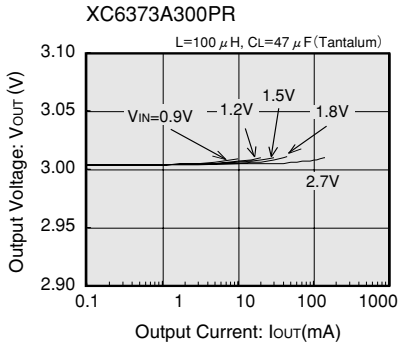

(2) EFFICIENCY vs. OUTPUT CURRENT
Topr=25°C

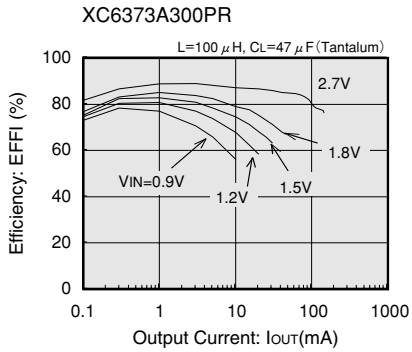

(3) RIPPLE VOLTAGE vs. OUTPUT CURRENT
Topr=25°C

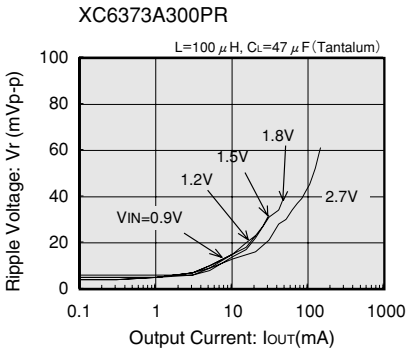

(4) NO LOAD INPUT CURRENT vs. INPUT VOLTAGE
Topr=25°C