查询JANTXV2N5660供应商 捷多邦，专业PCB打样工厂，24小时加急出货

The documentation and process conversion measures necessary to comply with this revision shall be completed by 27 October 2001.

INCH-POUND

MIL-PRF-19500/454D
27 July 2001
SUPERSEDING
MIL-PRF-19500/454C
19 August 1999

PERFORMANCE SPECIFICATION

SEMICONDUCTOR DEVICE, TRANSISTOR, NPN, SILICON, POWER
TYPE: 2N5660, 2N5661, 2N5662, AND 2N5663, JAN, JANTX, JANTXV

This specification is approved for use by all Departments and Agencies of the Department of Defense.

1. SCOPE

1.1 Scope. This specification covers the performance requirements for NPN, silicon, power transistors. Three level of product assurance are provided for each device type as specified in MIL-PRF-19500.

1.2 Physical dimensions. For types 2N5660 and 2N5661, see figure 1 (similar to TO-66).
For types 2N5662 and 2N5663, see figure 2 (similar to TO-5).

1.3 Maximum ratings. T_C = +25°C, unless otherwise specified.

Type	P_T T_A = +25°C	P_T T_C = +100°C	V_{CBO}	V_{CEO}	V_{EBO}	I_B	I_C	T_J and T_{STG}	V_{CER}
	W	W	V dc	V dc	V dc	A dc	A dc	°C	V dc
2N5660	2.0 (1)	20 (2)	250	200	6.0	0.5	2.0	-65 to +200	250
2N5661	2.0 (1)	20 (2)	400	300	6.0	0.5	2.0	-65 to +200	400
2N5662	1.0 (3)	15 (4)	250	200	6.0	0.5	2.0	-65 to +200	250
2N5663	1.0 (3)	15 (4)	400	300	6.0	0.5	2.0	-65 to +200	400

(1) Derate linearly, 11.4 mW/°C for T_A > +25°C.
(2) Derate linearly, 200 mW/°C for T_C > +100°C.
(3) Derate linearly, 5.7 mW/°C for T_A > +25°C.
(4) Derate linearly, 150 mW/°C for T_C > +100°C.

Beneficial comments (recommendations, additions, deletions) and any pertinent data which may be of use in improving this document should be addressed to: Defense Supply Center Columbus, ATTN: DSCC-VAC, P.O. Box 3990, Columbus, OH 43216-5000, using the Standardization Document Improvement Proposal (DD Form 1426) appearing at the end of this document or by letter.

AMSC N/A FSC 5961

DISTRIBUTION STATEMENT A. Approved for public release; distribution is unlimited.

找PDF 维库一下 pdf.dzsc.com

1.4 Primary electrical characteristics.

Limits	h_{FE2} (1) I_C = 0.5 A dc V_{CE} = 5 V dc		$\|h_{fe}\|$ I_C = 0.1 A dc V_{CE} = 5 V dc f = 10 MHz	$V_{BE(sat)}$ (1) I_C = 1.0 A dc I_B = 0.1 A dc	$V_{CE(sat)}$ (1) I_C = 1 A dc I_B = 0.1 A dc	Pulse response		
						t_{on} I_C = 0.5 A dc	t_{off} I_C = 0.5 A dc	
	2N5660 2N5662	2N5661 2N5663					2N5660 2N5662	2N5661 2N5663
				V dc	V dc	µs	µs	µs
Min	40	25	2					
Max	120	75	7	1.2	0.4	0.25	0.85	1.2

(1) Pulsed (see 4.5.1).
$R_{\theta JC}$ for 2N5660, 2N5661 = 5°C/W maximum; for 2N5662, 2N5663 = 6.67°C/W maximum.
$R_{\theta JA}$ for 2N5660, 2N5661 = 87.5°C/W maximum; for 2N5662, 2N5663 = 175°C/W maximum.

2. APPLICABLE DOCUMENTS

2.1 General. The documents listed in this section are specified in sections 3 and 4 of this specification. This section does not include documents cited in other sections of this specification or recommended for additional information or as examples. While every effort has been made to ensure the completeness of this list, document users are cautioned that they must meet all specified requirements documents cited in sections 3 and 4 of this specification, whether or not they are listed.

2.2 Government documents.

2.2.1 Specifications, standards and handbooks. The following specifications, standards and handbooks form a part of this document to the extent specified herein. Unless otherwise specified, the issues of these documents are those listed in the issue of the Department of Defense Index of Specifications and Standards (DODISS) and supplement thereto, cited in the solicitation (see 6.2).

SPECIFICATION

DEPARTMENT OF DEFENSE

MIL-PRF-19500 - Semiconductor Devices, General Specification for.

STANDARD

DEPARTMENT OF DEFENSE

MIL-STD-750 - Test Methods for Semiconductor Devices.

(Unless otherwise indicated, copies of the above specifications, standards, and handbooks are available from the Document Automation and Production Services (DAPS), Building 4D (DPM–DODSSP), 700 Robbins Avenue, Philadelphia, PA 19111-5094.)

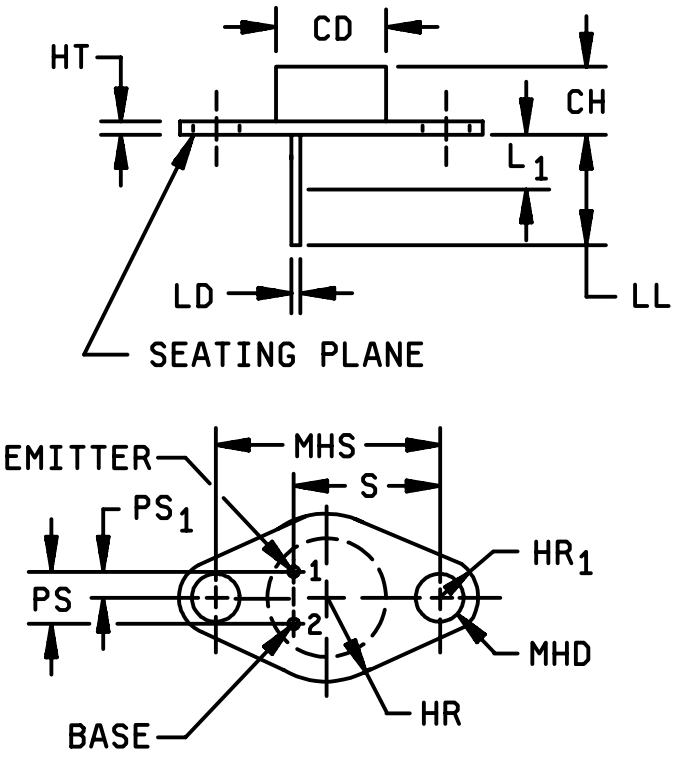

FIGURE 1. Physical dimensions, 2N5660 and 2N5661, (similar to TO-66).

Ltr	Dimensions				Notes
	Inches		Millimeters		
	Min	Max	Min	Max	
CD	0.470	0.500	11.94	12.70	7
CH	0.250	0.340	6.35	8.64	
HR		0.350		8.89	
HR_1	0.115	0.145	2.92	3.68	4
HT	0.050	0.075	1.27	1.91	
LD	0.028	0.034	0.71	0.86	4, 6
LL	0.360	0.500	9.14	12.70	4
L_1		0.050		1.27	4,6
MHD	0.142	0.152	3.61	3.86	4
MHS	0.958	0.962	24.33	24.43	
PS	0.190	0.210	4.83	5.33	3
PS_1	0.093	0.107	2.36	2.72	3
s	0.570	0.590	14.48	14.99	3

NOTES:
1. Dimensions are in inches. Lead 1 is emitter, lead 2 is base, and case is collector.
2. Metric equivalents are given for general information only.
3. These dimensions should be measured at points 0.050 inch (1.27 mm) +0.005 inch (0.13 mm) -0.000 inch (0.00 mm) below seating plane. When gauge is not used, measurement will be made at the seating plane.
4. Two places.
5. The seating plane of the header shall be flat within 0.001 inch (0.03 mm) concave to 0.004 inch (0.10 mm) convex inside a 0.930 inch (23.62 mm) diameter circle on the center of the header and flat within 0.001 inch (0.03 mm) concave to 0.006 inch (0.15 mm) convex overall.
6. Lead diameter shall not exceed twice LD within L_1.
7. Body contour is optional within zone defined by CD.
8. In accordance with ANSI Y14.5M, diameters are equivalent to ϕx symbology.

FIGURE 1. Physical dimensions, 2N5660 and 2N5661, (similar to TO-66) – Continued.

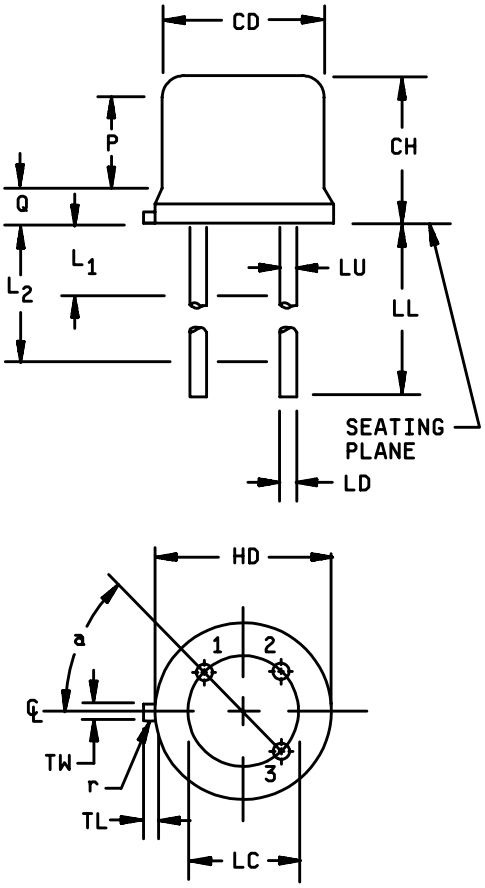

FIGURE 2. Physical dimensions, 2N5662 and 2N5663, (similar to TO-5).

Ltr	Dimensions				Notes
	Inches		Millimeters		
	Min	Max	Min	Max	
CD	0.305	0.355	7.75	9.02	
CH	0.240	0.260	6.10	6.60	
HD	0.335	0.370	8.51	9.40	
LC	0.200 TP		5.08 TP		6
LD	0.016	0.021	0.41	0.53	7
LL	1.500	1.750	38.10	44.45	7
LU	0.016	0.019	0.407	0.482	7
L1		0.050		1.27	7
L2	0.250		6.35		7
TL	0.029	0.045	0.74	1.14	3
TW	0.028	0.034	0.712	0.863	9
P	0.100		2.54		
Q		0.050		1.27	4
r		0.010		0.25.	10
α	45°TP		45°TP		6

NOTES:
1. Dimensions are in inches. Lead 1 is emitter, lead 2 is base, and lead 3 is collector.
2. Metric equivalents are given for general information only.
3. Symbol TL is measured from HD maximum.
4. Details of outline in this zone are optional.
5. Symbol CD shall not vary more than 0.010 inch (0.25 mm) in zone P. This zone is controlled for automatic handling.
6. Leads at gauge plane 0.054 inch (1.37 mm) +0.001 inch (0.03 mm) - 0.000 inch (0.00 mm) below seating plane shall be within 0.007 inch (0.18 mm) radius of TP relative to tab. Device may be measured by direct methods or by gauge.
7. Symbol LU applies between L_1 and L_2. Dimension LD applies between L_2 and LL minimum.
8. Lead number three is electrically connected to case.
9. Beyond r maximum, TW shall be held for a minimum length of .011 inch (0.28 mm).
10. Symbol r applied to both inside corners of tab.
11. In accordance with ANSI Y14.5M, diameters are equivalent to ϕx symbology

FIGURE 2. Physical dimensions, 2N5662 and 2N5663, (similar to TO-5) – Continued.

2.3. Order of precedence. In the event of a conflict between the text of this document and the references cited herein, the text of this document takes precedence. Nothing in this document, however, supersedes applicable laws and regulations unless a specific exemption has been obtained.

3. REQUIREMENTS

3.1. General. The requirements for acquiring the product described herein shall consist of this document and MIL-PRF-19500.

3.2 Qualification. Devices furnished under this specification shall be products that are manufactured by a manufacturer authorized by the qualifying activity for listing on the applicable qualified manufacturer's list (QML) before contract award (see 4.2 and 6.3).

3.3 Abbreviations, symbols, and definitions. Abbreviations, symbols, and definitions used herein shall be as specified in MIL-PRF-19500.

3.4 Interface requirements and physical dimensions. The Interface requirements and physical dimensions shall be as specified in MIL-PRF-19500, figure 1, (similar to TO-66) and figure 2, (similar to T0-5), herein.

3.4.1 Lead finish. Lead finish shall be solderable in accordance with MIL-PRF-19500, MIL-STD-750, and herein. Where a choice of finish is desired, it shall be specified in the contract or purchase order (see 6.2).

3.5 Marking. Marking shall be in accordance with MIL-PRF-19500.

3.6 Electrical performance characteristics. Unless otherwise specified herein, the electrical performance characteristics are as specified in paragraph 1.3, 1.4, and table I.

3.7 Electrical test requirements. The electrical test requirements shall be the subgroups specified in table I herein.

3.8 Workmanship. Semiconductor devices shall be processed in such a manner as to be uniform in quality and shall be free from other defects that will affect life, serviceability, or appearance.

4. VERIFICATION

4.1 Classification of inspections. The inspection requirements specified herein are classified as follows:

a. Qualification inspection (see 4.2).

b. Screening (see 4.3).

c. Conformance inspection (see 4.4).

4.2 Qualification inspection. Qualification inspection shall be in accordance with MIL-PRF-19500, and as specified herein.

4.3 Screening (JANTX and JANTXV levels). Screening shall be in accordance with MIL-PRF-19500 (table IV), and as specified herein. The following measurements shall be made in accordance with table I herein. Devices that exceed the limits of table I herein shall not be acceptable.

Screen (see table IV of MIL-PRF-19500)	Measurement
	JANTX JANTXV levels
(1)	Thermal response (see 4.3.2)
9	I_{CES1}
11	I_{CES1} and h_{FE2}; ΔI_{CES1} = 100 percent of initial value or 20 nA, dc whichever is greater
12	See 4.3.1
13	Subgroup 2 of table I herein; ΔI_{CES1} = 100 percent of initial value or 20 nA dc; Δh_{FE} = ±25 percent of initial value.

(1) This test shall be performed anytime before screen 9.

4.3.1 Power burn-in conditions. Power burn-in conditions are as follows: V_{CB} = 10 Vdc. Power shall be applied to achieve T_J =135°C minimum using a minimum P_D = 75% of P_T maximum rated as defined in 1.3.

4.3.2 Thermal response (ΔV_{BE} measurements). The ΔV_{BE} measurements shall be performed in accordance with MIL-STD-750, method 3131. The ΔV_{BE} conditions (I_H and V_H) and maximum limit V_{BE} shall be derived by each vendor. The chosen ΔV_{BE} measurement and conditions for each device in the qualification lot shall be submitted in the qualification report and a thermal response curve shall be plotted, read, and measurements recorded. The chosen ΔV_{BE} shall be considered final after the manufacturer has had the opportunity to test five consecutive lots. The following parameter measurements shall apply:

a. I_M measurement..... 10 mA.

b. V_{CE} measurement voltage..... 10 V (same as V_H).

c. I_H collector heating current..... 1.0 A (minimum).

d. V_H collector-emitter heating voltage..... 10 V (minimum).

e. t_H heating time ..... 10 ms (TO-5).
..... 25 ms (TO-66).

f. t_{MD} measurement delay time..... 50 µs to 80 µs.

4.4 Conformance inspection. Conformance inspection shall be in accordance with MIL-PRF-19500, and as specified herein.

4.4.1 Group A inspection. Group A inspection shall be conducted in accordance with MIL-PRF-19500, and table I herein. Electrical measurements (end-points) shall be in accordance with the applicable inspections of table I, group A, subgroup 2 herein.

4.4.2 Group B inspection. Group B inspection shall be conducted in accordance with the conditions specified below. Electrical measurements (end-points) and delta requirements JAN, JANTX, and JANTXV shall be after each step and shall be in accordance with group A, subgroup 2 and table III herein. Separate samples may be used for each step. In the event of a group B failure, the manufacturer may pull a new sample at double size from either the failed assembly lot or from another assembly lot from the same wafer lot. If the new "assembly lot" option is exercised, the failed assembly lot shall be scrapped.

4.4.2.1 Group B inspection herein, (JAN, JANTX, and JANTXV).

Step	Method	Condition
1	1039	Steady-state life: Test condition B, 340 hours, V_{CE} = 10 percent of stated V_{CEO} (see 1.3), T_J = 175°C min. No heat sink or forced-air cooling on the devices shall be permitted. n = 45 devices, c = 0
2	1039	The steady-state life test of step 1 shall be extended to 1,000 hours for each die design. Samples shall be selected from a wafer lot every twelve months of wafer production, however, group B shall not be required more than once for any single wafer lot. n = 45, c = 0.
3	1032	High-temperature life (non-operating), T_A = +200°C. n = 22, c = 0.

4.4.2.2 Group B sample selection. Samples selected from group B inspection shall meet all of the following requirements:

a. For JAN, JANTX, and JANTXV samples shall be selected randomly from a minimum of three wafers (or from each wafer in the lot) from each wafer lot. See MIL-PRF-19500.

b. Must be chosen from an inspection lot that has been submitted to and passed group A, subgroup 2, conformance inspection. When the final lead finish is solder or any plating prone to oxidation at high temperature, the samples for life test (group B for JAN, JANTX, and JANTXV) may be pulled prior to the application of final lead finish.

4.4.3 Group C inspection, Group C inspection shall be conducted in accordance with the conditions specified for subgroup testing in table VII of MIL-PRF-19500, 4.4.3.1 (JAN, JANTX, and JANTXV) herein for group C testing. Electrical measurements (end points) and delta requirements shall be in accordance with group A, subgroup 2 and table III herein.

4.4.3.1 Group C inspection, table VII (JAN, JANTX, and JANTXV) of MIL-PRF-19500.

Subgroup	Method	Condition
C2	2036	Test condition A (tension) for 2N5660 and 2N5661; weight = 3 pounds; t = 15s.
C2	2036	Test condition E (lead fatigue) for 2N5662 and 2N5663.
C6		Not applicable.

4.4.3.2 Group C sample selection. Samples for subgroups in group C shall be chosen at random from any lot containing the intended package type and lead finish procured to the same specification which is submitted to and passes group A tests for conformance inspection. Testing of a subgroup using a single device type enclosed in the intended package type shall be considered as complying with the requirements for that subgroup.

4.4.4 Group E inspection. Group E inspection shall be conducted in accordance with the conditions specified for subgroup testing in table IX of MIL-PRF-19500, and table II herein. Electrical measurements (end-points) and delta requirements shall be in accordance with the applicable steps of table III herein.

4.5 Methods of inspection. Methods of inspection shall be as specified in the appropriate tables and as follows.

4.5.1 Pulse measurements. Conditions for pulse measurement shall be as specified in section 4 of MIL-STD-750.

4.5.2 Thermal resistance. Thermal resistance measurements shall be conducted in accordance with method 3131 of MIL-STD-750. The following details shall apply:

a. Collector current magnitude during power application shall be 0.5 A dc for 2N5660 and 2N5661, and 0.4 A dc for 2N5662 and 2N5663.

b. Collector to emitter voltage magnitude shall be 20 V dc.

c. Reference temperature measuring point shall be the case.

d. Reference point temperature shall be $+25°C \leq T_R \leq +75°C$ and recorded before the test is started.

e. Mounting arrangement shall be with heat sink to header.

f. Maximum limit of $R_{\theta JC}$ shall be 5°C/W for 2N5660 and 2N5661, and 6.67°C/W for 2N5662 and 2N5663.

TABLE I. Group A inspection.

Inspection 1/	MIL-STD-750		Symbol	Limits		Unit
	Method	Conditions		Min	Max	
Subgroup 1 2/						
Visual and mechanical Examination	2071	n = 45 devices, c = 0				
Solderability 3/	2026	n = 15 leads, c = 0				
Resistance to solvent 3/ 4/	1022	n = 15 leads, c = 0				
Temp cycling 3/	1051	Test condition C, 25 cycles. n = 22 devices, c = 0				
Heremetic seal	1071	n = 22 devices, c = 0				
Fine leak						
Gross leak						
Electrical measurements		Group A, subgroup 2				
Bond strength 3/	2037	Precondition T_A = +250°C at t = 24 hrs or T_A = +300°C at t = 2 hrs, n = 11 wires, c = 0				
Subgroup 2						
Breakdown voltage, Collector to emitter	3011	Pulsed (see 4.5.1) I_C = 10 mA dc, bias condition D	$V_{(BR)CEO}$			V dc
2N5660, 2N5662				200		
2N5661, 2N5663				300		
Breakdown voltage, Collector to base	3011	Bias condition D, I_C = 10 mA dc, pulsed (see 4.5.1), R_{BE} = 100 ohms	$V_{(BR)CER}$			V dc
2N5660, 2N5662				250		
2N5661, 2N5663				400		
Breakdown voltage, Emitter to base	3026	Bias condition D, I_E = 10 µA dc	$V_{(BR)EBO}$	6		V dc

See footnotes at end of table.

TABLE I. Group A inspection - Continued.

Inspection 1/	MIL-STD-750		Symbol	Limits		Unit
	Method	Conditions		Min	Max	
Subgroup 2 – Continued						
Collector to emitter cutoff current	3041	Bias condition C	I_{CES1}			
2N5660, 2N5662		V_{CE} = 200 V dc			0.2	µA dc
2N5661, 2N5663		V_{CE} = 300 V dc			0.2	µA dc
Collector to base cutoff current	3036	Bias condition D	I_{CBO}			
250 v 2N5660, 2N5662		V_{CB} = 200 V dc			0.1	µA dc
		V_{CB} = 250 V dc			1.0	mA dc
400 v 2N5661, 2N5663		V_{CB} = 300 V dc			0.1	µA dc
		V_{CB} = 400 V dc			1.0	mA dc
Base emitter voltage (saturated)	3066	Test condition A, pulsed (see 4.5.1), I_C = 1 A dc, I_B = 0.1 A dc	$V_{BE(sat1)}$		1.2	V dc
Base emitter voltage (saturated)	3066	Test condition A, pulsed (see 4.5.1), I_C = 2 A dc, I_B = 0.4 A dc	$V_{BE(sat2}$		1.5	V dc
Collector to emitter Voltage (saturated)	3071	Pulsed (see 4.5.1), I_C = 1 A dc, I_B = 0.1 A dc	$V_{CE(sat1}$		0.4	V dc
Collector to emitter Voltage (saturated)	3071	Pulsed (see 4.5.1), I_C = 2 A dc, I_B = 0.4 A dc	$V_{CE(sat2)}$		0.8	V dc
Forward current Transfer ratio	3076	V_{CE} = 2.0 V dc, I_C = 50 mA dc, pulsed (see 4.5.1)	h_{FE1}			
2N5660, 2N5662				40		
2N5661, 2N5663				25		
Forward current Transfer ratio	3076	V_{CE} = 5.0 V dc, I_C = 0.5 A dc, pulsed (see 4.5.1)	h_{FE2}			
2N5660, 2N5662				40	120	
2N5661, 2N5663				25	75	

See footnotes at end of table.

TABLE I. Group A inspection - Continued.

Inspection 1/	MIL-STD-750		Symbol	Limits		Unit
	Method	Conditions		Min	Max	
Subgroup 2 – Continued						
Forward current Transfer ratio	3076	V_{CE} = 5.0 V dc, I_C = 1 A dc, pulsed (see 4.5.1)	h_{FE3}	15		
Forward current transfer ratio	3076	V_{CE} = 5.0 V dc, I_C = 2 A dc, pulsed (see 4.5.1)	h_{FE4}	5		
Subgroup 3						
High temperature operation:		T_A = +150°C				
Collector to emitter cutoff current	3041	Bias condition C	I_{CES2}			
2N5660, 2N5662 2N5661, 2N5663		V_{CE} = 200 V dc V_{CE} = 300 V dc			100 100	µA dc µA dc
Low temperature operation:		T_A = -55°C				
Forward current transfer ratio	3076	V_{CE} = 5.0 V dc, I_C = 0.5 A dc, pulsed (see 4.5.1)	h_{FE5}			
2N5660, 2N5662 2N5661, 2N5663				15 10		
Subgroup 4						
Small-signal short-circuit forward-current transfer ratio	3306	V_{CE} = 5 V dc, I_C = 0.1 A dc, f = 10 MHz	$\|h_{fe}\|$	2	7	
Pulse response						
Turn-on time	3251	Test condition A, V_{CC} = 100 V dc, I_C = 0.5 A dc	t_{on}			
2N5660, 2N5662 2N5661, 2N5663		See figure 3 See figure 4			0.25 0.25	µs µs

See footnotes at end of table.

TABLE I. Group A inspection - Continued.

Inspection 1/	MIL-STD-750		Symbol	Limits		Unit
	Method	Conditions		Min	Max	
Subgroup 4– Continued						
Turn-off time	3251	Test condition A, V_{CC} = 100 V dc, I_C = 0.5 A dc	t_{off}			
2N5660, 2N5662		See figure 3			0.85	µs
2N5661, 2N5663		See figure 4			1.2	µs
Open circuit output capacitance	3236	V_{CB} = 10 V dc, I_E = 0, 100 kHz ≤ f ≤ 1 MHz	C_{obo}		45	pF
Subgroup 5						
Safe operating area (continuous dc)	3051	T_C = +100°C, power application time ≥ 1 second, 1 cycle, $t_r + t_f$ = 10 µs, (2N5660 and 2N5661, see figure 5, 2N5662 and 2N5663, see figure 6)				
Test 1						
2N5660, 2N5661		V_{CE} = 10 V dc, I_C = 2 A dc				
2N5662, 2N5663		V_{CE} = 7.5 V dc, I_C = 2 A dc				
Test 2						
2N5660, 2N5661		V_{CE} = 40 V dc, I_C = 500 mA dc				
2N5662, 2N5663		V_{CE} = 25 V dc, I_C = 600 mA dc				
Test 3						
2N5660		V_{CE} = 200 V dc, I_C = 36 mA dc				
2N5662		V_{CE} = 200 V dc, I_C = 27 mA dc				
Test 4						
2N5661		V_{CE} = 300 V dc, I_C = 19 mA dc				
2N5663		V_{CE} = 300 V dc, I_C = 14 mA dc				

See footnotes at end of table.

TABLE I. Group A inspection - Continued.

Inspection 1/	MIL-STD-750		Symbol	Limits		Unit
	Method	Conditions		Min	Max	
Subgroup 5– Continued						
Safe operating area (clamped inductive)		T_C = +100°C, $t_r + t_f \leq 10$ µs duty cycle ≤ 2 percent, I_C = 2 A dc, $t_p \approx 4$ ms, V_{CE} = 25 V dc (see figures 7 and 8)				
2N5660, 2N5662		Clamp voltage = 200, +0, -5 V dc				
2N5661, 2N5663		Clamp voltage = 300, +0, -5 V dc				
Electrical measurements		See table I, subgroup 2 herein.				

1/ For sampling plan, see MIL-PRF-19500.
2/ For resubmission of failed subgroup A1, double the sample size of the failed test or sequence of tests.
3/ Separate samples may be used.
4/ Not required for laser marked devices.

TABLE II. Group E inspection (all quality levels) for qualification only.

Inspection	MIL-STD-750		Qualification conformance inspection
	Method	Conditions	
Subgroup 1			22 devices, c = 0
Thermal shock (temperature cycling)	1051	500 cycles, condition D	
Electrical measurements		See table I, subgroup 2	
Subgroup 2			22 devices, c = 0
Steady-state dc blocking life	1039 or 1049	Condition A, 500 hours	
Electrical measurements		See table I, subgroup 2, I_{CBO} test only at V_{CBO} maximum rating (see 1.3).	
Subgroup 3			
Not applicable			
Subgroup 4			22 devices, c = 0
Thermal resistance	3131	$R_{\theta JC}$ = 5°C/W for 2N5660 and 2N5661 maximum, $R_{\theta JC}$ = 6.67°C/W for 2N5662 and 2N5663 maximum (see 4.5.2)	
Subgroup 5			15 devices, c = 0
Barometric pressure (reduced)	1001	Normal mounting pressure = 8 mm Hg ±2 mm Hg for 60 s (minimum)	
Electrical measurements		See table I, subgroup 2	

TABLE III. Groups B delta measurements. 1/

Step	Inspection 1/	MIL-STD-750		Symbol	Limits		Unit
		Method	Conditions		Min	Max	
1.	Collector to emitter cutoff current 2N5660, 2N5662 2N5661, 2N5663	3041	Bias condition C V_{CE} = 200 V dc V_{CE} = 300 V dc	ΔI_{CES1}	100 percent of initial value or 20 nA dc, whichever is greater.		
2.	Forward current transfer ratio	3076	V_{CE} = 5 V dc, I_C = 0.5 A dc, pulsed (see 4.5.1)	Δh_{FE2}	±25 percent change in initial recorded value.		
3.	Thermal resistance	3131	See 4.5.2	$\Delta R_{\theta JC}$			°C/W

1/ The delta measurements for 4.4.2 are as follows:
Step 1, see table III, steps 1, 2 and 3.
Step 2, see table III, steps 1, 2 and 3.
Step 3, see table III, steps 1 and 2.

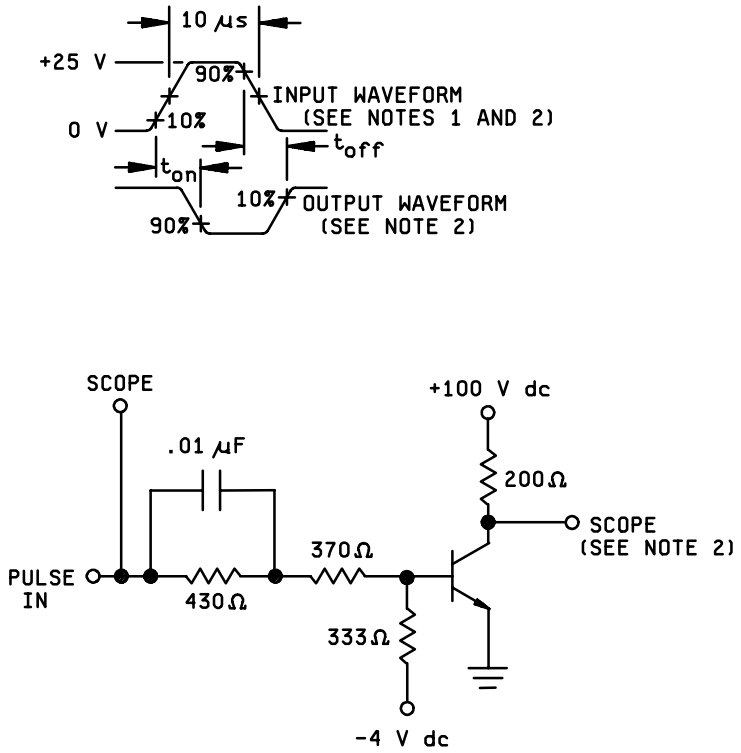

NOTES:

1. The input waveform is supplied by a pulse generator with the following characteristics: $t_r \leq 15$ ns, $t_f \leq 15$ ns, $Z_{OUT} = 50\ \Omega$, PW = 10 µs, duty cycle ≤ 2 percent.
2. Output waveforms are monitored on an oscilloscope with the following characteristics: $t_r \leq 1$ ns, $Z_{IN} \geq 10\ M\Omega$, $C_{IN} \leq 11.5$ pF.
3. Resistors shall be noninductive types.
4. The dc power supplies may require additional bypassing in order to minimize ringing.
5. The input pulse voltages, -4 V dc and +100 V dc, are nominal and shall be adjusted to obtain $I_{B1} = -I_{B2} = 15$ mA dc.
6. The 0.01 µF capacitor may be removed for current adjustment only.

FIGURE 3. Pulse response test circuit for types 2N5660 and 2N5662.

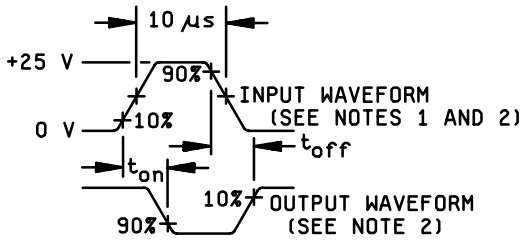

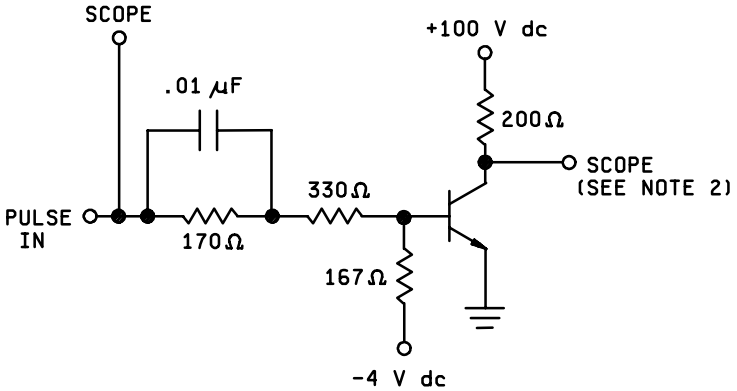

NOTES:

1. The input waveform is supplied by a pulse generator with the following characteristics: $t_r \leq 15$ ns, $t_f \leq 15$ ns, $Z_{OUT} = 50\ \Omega$, PW = 10 µs, duty cycle ≤ 2 percent.
2. Output waveforms are monitored on an oscilloscope with the following characteristics: $t_r \leq 1$ ns, $Z_{IN} \geq 10\ M\Omega$, $C_{IN} \leq 11.5$ pF.
3. Resistors shall be noninductive types.
4. The dc power supplies may require additional by = passing in order to minimize ringing.
5. The input pulse voltages, -4 V dc and +100 V dc, are nominal and shall be adjusted to obtain $I_{B1} = -I_{B2} = 25$ mA dc.
6. The 0.01 µF capacitor may be removed for current adjustment only.

FIGURE 4. Pulse response test circuit for types 2N5661 and 2N5663.

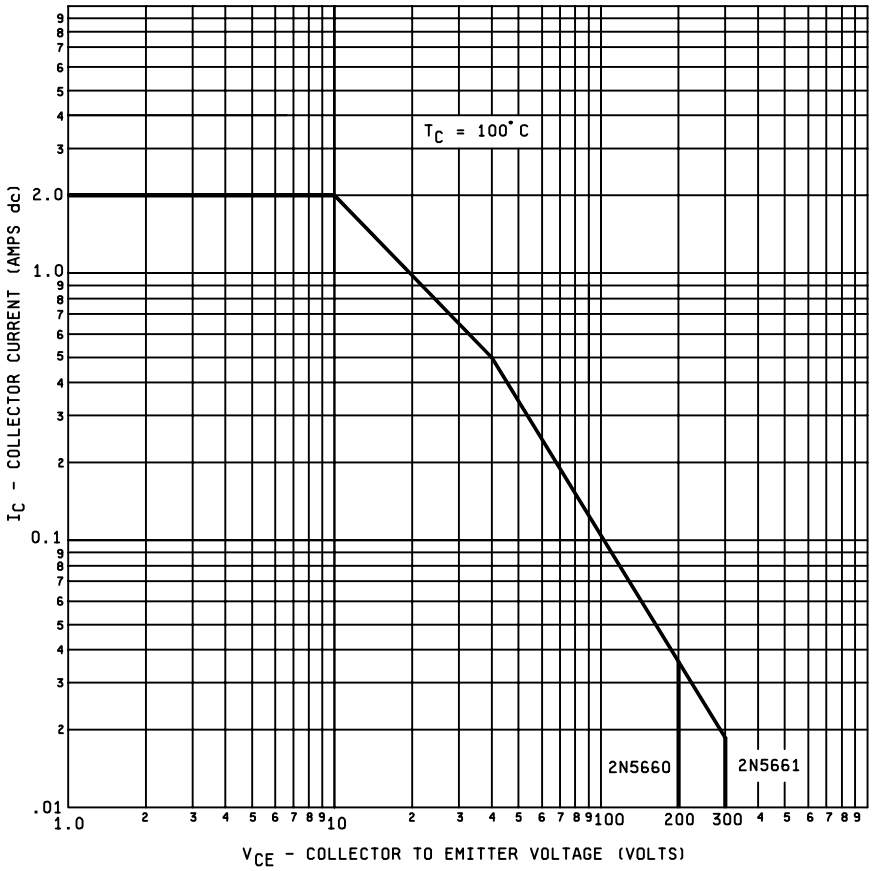

FIGURE 5. Maximum operating area graph (continuous dc) for types 2N5660 and 2N5661.

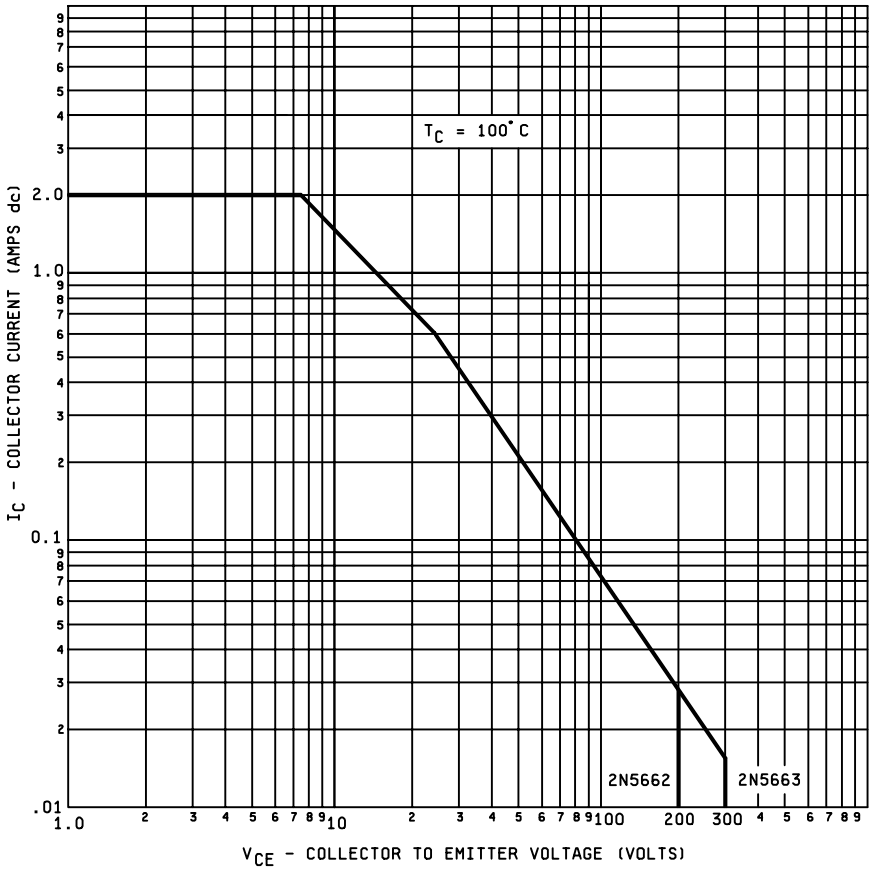

FIGURE 6. Maximum operating area graph (continuous dc) for types 2N5662 and 2N5663.

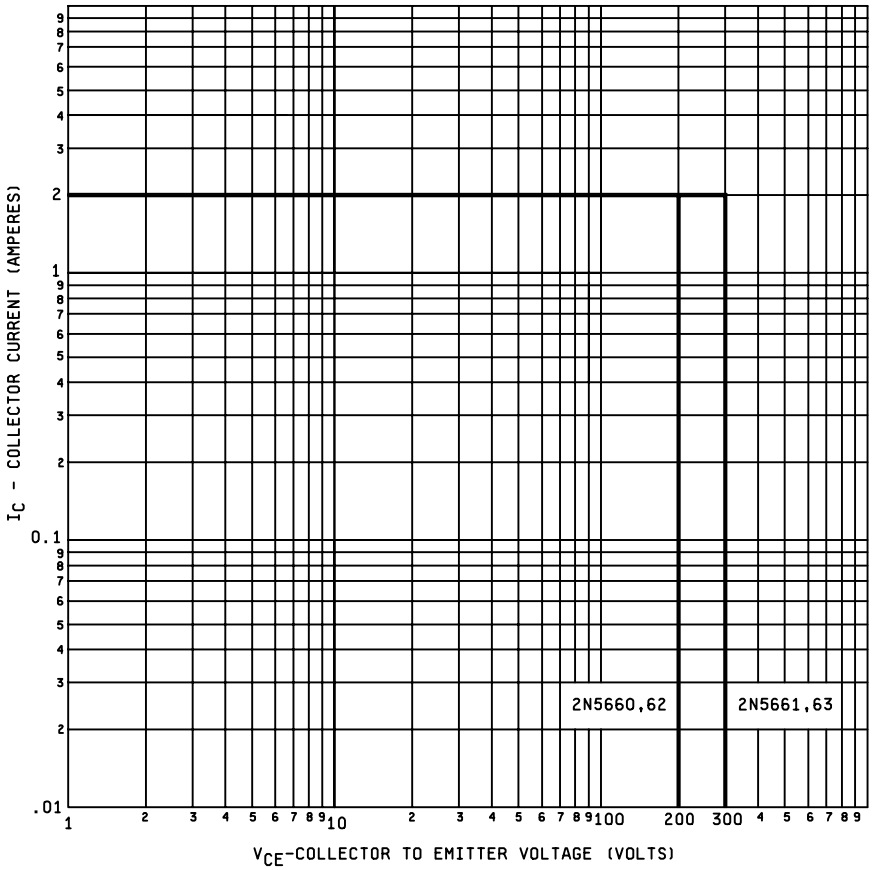

FIGURE 7. Safe operating area for switching between saturation and cutoff - (clamped inductive load).

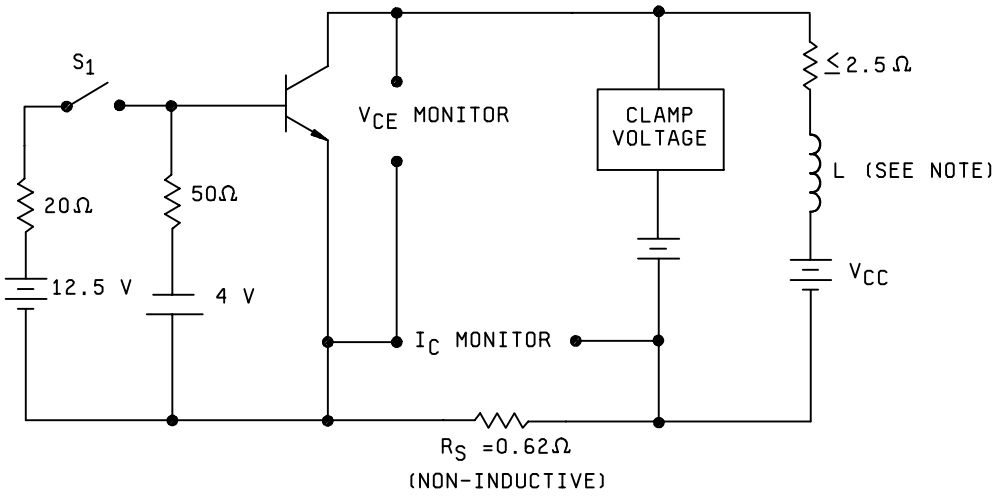

NOTE: 40 mH (triad C-48U, or equivalent)

Procedure:

1. With switch S_1 closed, set the specified test conditions.
2. Open S_1. Device fails if clamp voltage is not reached.
3. Perform specified end-point tests.

FIGURE 8. Clamped inductive sweep test circuit.

5. PACKAGING

5.1 Packaging. For acquisition purposes, the packaging requirements shall be as specified in the contract or order (see 6.2). When actual packaging of materiel is to be performed by DoD personnel, these personnel need to contact the responsible packaging activity to ascertain requisite packaging requirements. Packaging requirements are maintained by the Inventory Control Points' packaging activity within the Military Department or Defense Agency, or within the Military Departments' System Command. Packaging data retrieval is available from the managing Military Departments' or Defense Agency's automated packaging files, CD-ROM products, or by contacting the responsible packaging activity.

6. NOTES
(This section contains information of a general or explanatory nature that may be helpful, but is not mandatory.)

6.1 Notes. The notes specified in MIL-PRF-19500 are applicable to this specification.

6.2 Acquisition requirements. Acquisition documents must specify the following:

a. Title, number, and date of this specification.

b. Issue of DoDISS to be cited in the solicitation and if required, the specific issue of individual documents referenced (see 2.2.1).

c. The lead finish or material as specified (see 3.4.1).

d. Type designation and quality assurance level.

e. Packaging requirements (see 5.1).

6.3 Substitution information. Devices covered by this specification are substitutable for the manufacturer's and user's PIN. This information in no way implies that manufacturer's PIN's are suitable as a substitute for the Part or Identifying Number (PIN). The term PIN is equivalent to the term (part number, identification number, and type designator) which was previously used in this specification.

6.4 Qualification. With respect to products requiring qualification, awards will be made only for products which are, at the time of award of contract, qualified for inclusion in Qualified Manufacturer's List (QML) whether or not such products have actually been so listed by that date. The attention of the contractors is called to these requirements, and manufacturers are urged to arrange to have the products that they propose to offer to the Federal Government tested for qualification in order that they may be eligible to be awarded contracts or orders for the products covered by this specification. Information pertaining to qualification of products may be obtained from Defense Supply Center, Columbus, ATTN: DSCC-VQE, P.O. Box 3990, Columbus, OH 43216-5000.

6.5 Changes from previous issue. Marginal notations are not used in this revision to identify changes with respect to the previous issue due to the extensiveness of the changes.

Custodians:
Army - CR
Navy - NW
Air Force - 11
NASA - NA
DLA - CC

Review activities:
Army - AR, MI, SM
Navy - AS, MC, OS
Air Force – 19

Preparing activity:
DLA - CC

(Project 5961-2385)

STANDARDIZATION DOCUMENT IMPROVEMENT PROPOSAL

INSTRUCTIONS

1. The preparing activity must complete blocks 1, 2, 3, and 8. In block 1, both the document number and revision letter should be given.

2. The submitter of this form must complete blocks 4, 5, 6, and 7.

3. The preparing activity must provide a reply within 30 days from receipt of the form.

NOTE: This form may not be used to request copies of documents, nor to request waivers, or clarification of requirements on current contracts. Comments submitted on this form do not constitute or imply authorization to waive any portion of the referenced document(s) or to amend contractual requirements.

I RECOMMEND A CHANGE:	1. DOCUMENT NUMBER MIL-PRF-19500/454D	2. DOCUMENT DATE 010727

3. **DOCUMENT TITLE**
SEMICONDUCTOR DEVICE, TRANSISTOR, NPN, SILICON, POWER TYPE: 2N5660, 2N5661, 2N5662, AND 2N5663, JAN, JANTX, JANTXV

4. NATURE OF CHANGE (Identify paragraph number and include proposed rewrite, if possible. Attach extra sheets as needed.)

5. REASON FOR RECOMMENDATION

6. SUBMITTER

a. NAME (Last, First, Middle initial)	b. ORGANIZATION	
c. ADDRESS (Include Zip Code)	d. TELEPHONE (Include Area Code) COMMERCIAL DSN FAX EMAIL	7. DATE SUBMITTED

8. PREPARING ACTIVITY

a. Point of Contact Alan Barone	b. TELEPHONE Commercial: 614-692-0510 DSN: 850-0510 FAX: 614-692-6939 EMAIL: alan.barone@dscc.dla.mil
c. ADDRESS Defense Supply Center, Columbus ATTN: DSCC-VAC, P.O. Box 3990 Columbus, OH 43216-5000	IF YOU DO NOT RECEIVE A REPLY WITHIN 45 DAYS, CONTACT: Defense Standardization Program Office (DLSC-LM) 8725 John J. Kingman, Suite 2533, Fort Belvoir, VA 22060-6221 Telephone (703) 767-6888 DSN 427-6888