查询YM3805供应商 捷多邦，专业PCB打样工厂，24小时加急出货

DIGITAL AUDIO

Signal Processor & Controller for Compact Disk Player

YM3805 SPC

■ OUTLINE

The YM3805 is a compact disc player signal processor (SGP) and servo controller CMOS LSI developed by Yamaha.

The YM3805 carries out the digital filtering and other signal processing useful for optical pick-up EFM signal demodulation and erroneous signal detection and correction and improved audio quality, as well all servo control (e. g., focus, disc, tracking, feed).

It is used in conjunction with the special serial input DAC YM3015 or YM3020.

■ FUNCTIONS

1. Simple external connection of a crystal activates reference clock oscillations and the necessary internal timing signals.
2. Digitalizes the EFM signal, and based on that carries out clock regeneration and synchronizing signal isolation.
3. EFM demodulates this digital signal.
4. Isolates the Q sub-code from the EFM demodulated signal, and after carrying out a CRC check, outputs it to an external microprocessor.
5. Outputs a frame phase difference signal derived from the regenerated clock and the reference clock and controls the rotation speed of the disc motor.
6. Carries out tracking as well as feed servo control for calling up the beginning of a selection and for fast forward, etc., upon input of a command from an external microprocessor.
7. Uses EFM demodulated signal buffering to absorb fluctuations in the rotation of the disc and interfaces the external RAM and signals (±4 frame jitter absorption).
8. Carries out unscrambling and de-interleaving of EFM demodulated signals in a set order.
9. Detects erroneous signals and corrects them and performs flag processing as well (double-error correction).
   Performs signal compensation, hold, and even muting.
10. Carries out digital filtering (signal break at 20 KHz) by doubling the sampling period (88.2 KHz for both the left and right channels), outputting a DAC signal. (Modes in which digital filtering is not carried out are also available.)

■ FEATURES

1. Silicon gate CMOS construction
2. 80 pin flat plastic package (saves space)
3. 5 V single power supply

■ ELECTRICAL CHARACTERISTICS

Absolute Maximum Ratings

ITEM	SYMBOL	RATING	UNITS
Supply voltage	V_{DD}	−0.3 ~ +7.0	V
Input voltage	V_I	−0.3 ~ V_{DD} +0.5	V
Operating temperature	T_{op}	−20 ~ +75	°C
Storage temperature	T_{stg}	−50 ~ +125	°C

Recommended Operating Conditions

ITEM	SYMBOL	MIN.	TYP.	MAX.	UNITS
Supply voltage	V_{DD}	4.75	5.00	5.25	V
Operating temperature	T_{op}	0	25	75	°C

Electrical Characteristics

ITEM	SYMBOL	CONDITIONS	MIN.	TYP.	MAX.	UNITS	REMARKS
Supply current	I_{DD}	V_{DD} = 5V		25	40	mA	
Output high level voltage	V_{OH}	I_{OH} = 20μA	4.0			V	
Output low level voltage	V_{OL}	I_{OL} = 1 mA			0.4	V	
Input high level voltage (1)	V_{IH1}		3.5			V	(Note 1)
Input low level voltage (1)	V_{IL1}				1.5	V	(Note 1)
Input high level voltage (2)	V_{IH2}		2.0			V	(Note 2)
Input low level voltage (2)	V_{IL2}				0.8	V	(Note 2)
Input leakage current	I_{LK}	V_I = 5V			10	μA	

Condition: V_{DD} = 5.0V±5%, T_{op} = +0 ~ 70°C

Note 1: Applicable to terminals 3.VCOL 8.EFMI 14.$\overline{FZC}$ 15.FRF 16.HF 17.TER.

Note 2: Applicable to terminals 22.$\overline{RST}$ 30.DIN 40.$\overline{CS}$ 54.DO 64.DI

找PDF 维库一下 pdf.dzsc.com

■ OUTLINE DIMENSIONS

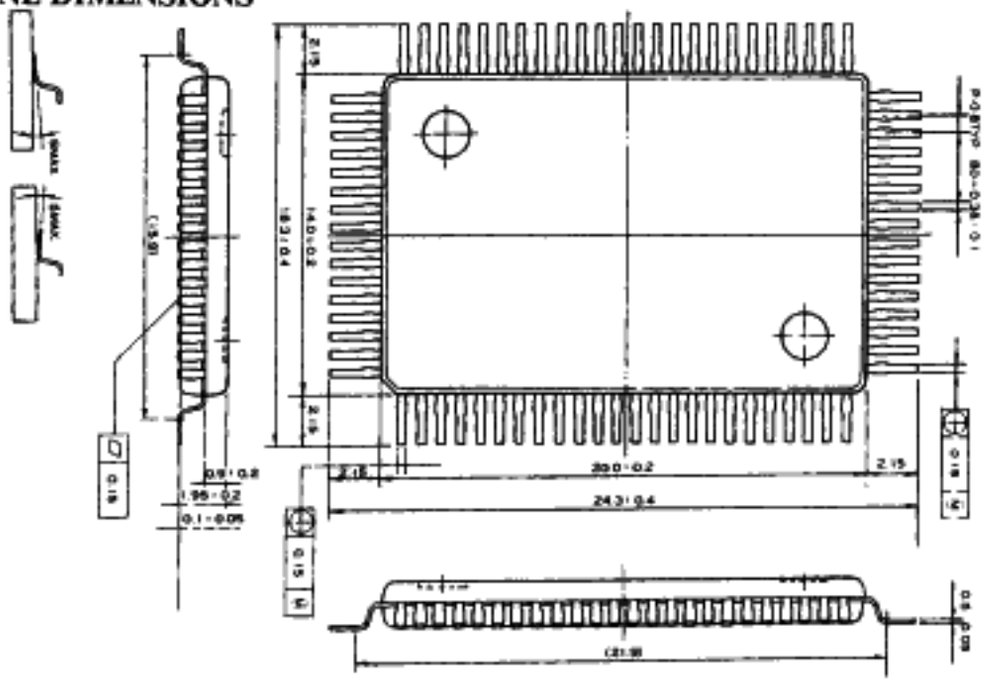
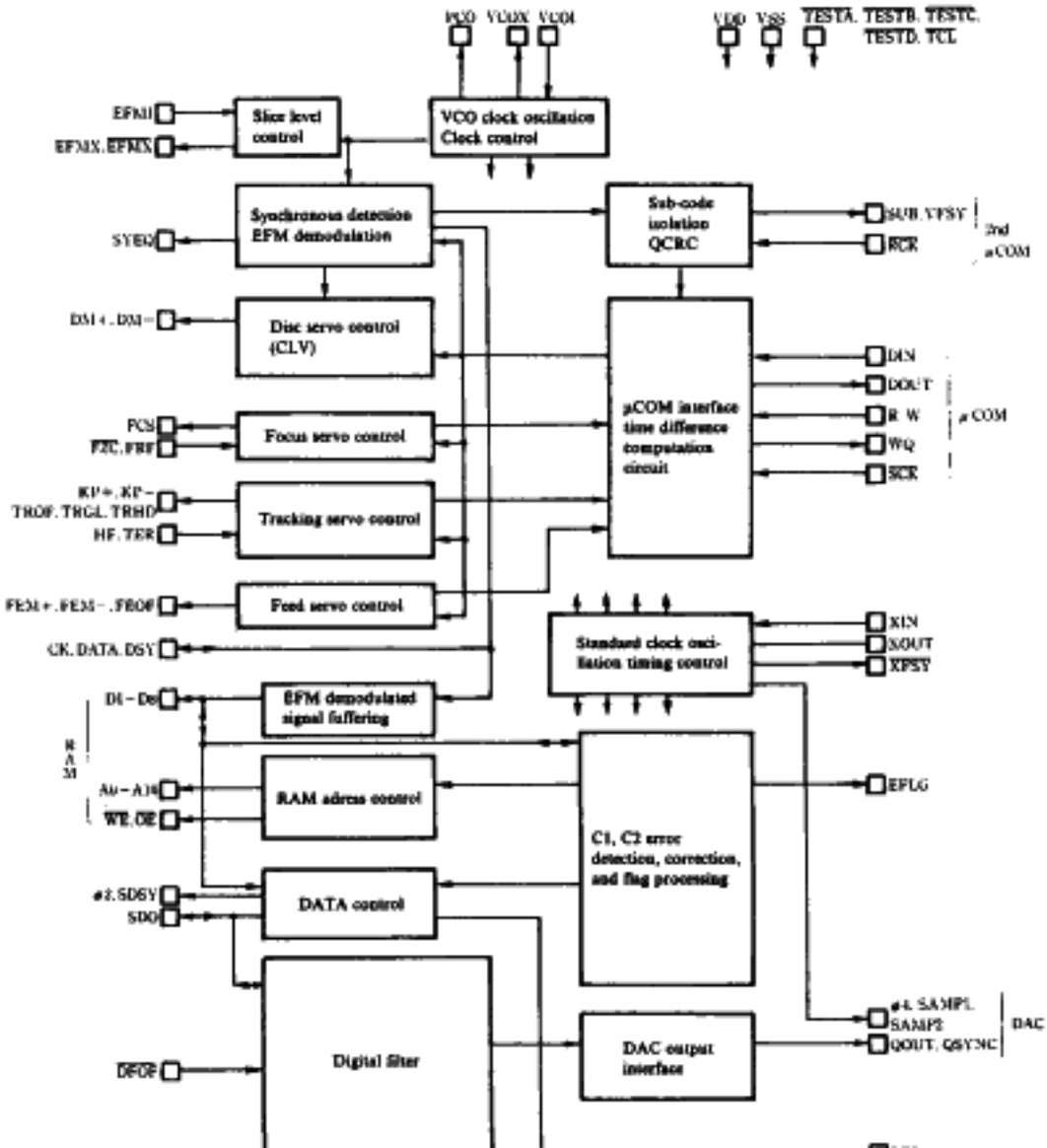
■ BLOCK DIAGRAM