查询BZT52C27S供应商

Formosa MS

BZT52C2V0S - BZT52C39S

SURFACE MOUNT ZENER DIODE

Features

- Planar Die Construction
- Ultra-Small Surface Mount Package
- Ideally suited for Automated Assembly Processes
- Also Available in Lead Free Version

Mechanical Data

- Case: SOD-323, Plastic
- Case material - UL Flammability Rating Classification 94V-0
- Moisture sensitivity: Level 1 per J-STD-020A
- Terminals: Solderable per MIL-STD-202, Method 208
- Also Available in Lead Free Plating (Matte Tin Finish). Please see Ordering Information, Note 6, on Page 2
- Polarity: Cathode Band
- Marking: See Sheet 2
- Weight: 0.004 grams (approx.)

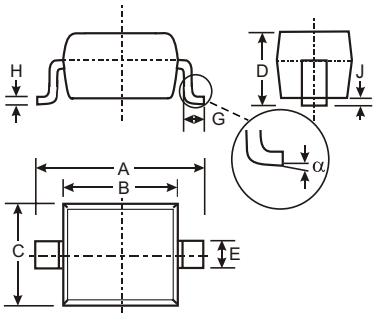

SOD-323		
Dim	**Min**	**Max**
A	2.30	2.70
B	1.60	1.80
C	1.20	1.40
D	1.05 Typical	
E	0.25	0.35
G	0.20	0.40
H	0.10	0.15
J	0.05 Typical	
α	0°	8°
All Dimensions in mm		

Maximum Ratings @ T_A = 25°C unless otherwise specified

Characteristic	Symbol	Value	Unit
Forward Voltage (Note 2) @ I_F = 10mA	V_F	0.9	V
Power Dissipation (Note 1)	P_d	200	mW
Thermal Resistance, Junction to Ambient Air (Note 1)	$R_{\theta JA}$	625	°C/W
Operating and Storage Temperature Range	T_j, T_{STG}	-65 to +150	°C

Notes: 1. Part mounted on FR-4 PC board with recommended pad layout, as per http://www.diodes.com/datasheets/ap02001.pdf.
2. Short duration test pulse used in minimize self-heating effect.

Electrical Characteristics @ T_A = 25°C unless otherwise specified

Type Number	Marking Code	Zener Voltage Range (Note 2)				Maximum Zener Impedance (Note 3)			Maximum Reverse Current (Note 2)		Temperature Coefficient of Zener Voltage @ I_{ZT} = 5mA mV/°C	
		V_Z @ I_{ZT}			I_{ZT}	Z_{ZT} @ I_{ZT}	Z_{ZK} @ I_{ZK}	I_{ZK}	I_R	V_R		
		Nom (V)	Min (V)	Max (V)	(mA)	Ω		mA	uA	V	Min	Max
BZT52C2V0S	WY	2.0	1.91	2.09	5	100	600	1.0	150	1.0	-3.5	0
BZT52C2V4S	WX	2.4	2.20	2.60	5	100	600	1.0	50	1.0	-3.5	0
BZT52C2V7S	W1	2.7	2.5	2.9	5	100	600	1.0	20	1.0	-3.5	0
BZT52C3V0S	W2	3.0	2.8	3.2	5	95	600	1.0	10	1.0	-3.5	0
BZT52C3V3S	W3	3.3	3.1	3.5	5	95	600	1.0	5	1.0	-3.5	0
BZT52C3V6S	W4	3.6	3.4	3.8	5	90	600	1.0	5	1.0	-3.5	0
BZT52C3V9S	W5	3.9	3.7	4.1	5	90	600	1.0	3	1.0	-3.5	0
BZT52C4V3S	W6	4.3	4.0	4.6	5	90	600	1.0	3	1.0	-3.5	0
BZT52C4V7S	W7	4.7	4.4	5.0	5	80	500	1.0	3	2.0	-3.5	0.2
BZT52C5V1S	W8	5.1	4.8	5.4	5	60	480	1.0	2	2.0	-2.7	1.2
BZT52C5V6S	W9	5.6	5.2	6.0	5	40	400	1.0	1	2.0	-2.0	2.5
BZT52C6V2S	WA	6.2	5.8	6.6	5	10	150	1.0	3	4.0	0.4	3.7
BZT52C6V8S	WB	6.8	6.4	7.2	5	15	80	1.0	2	4.0	1.2	4.5
BZT52C7V5S	WC	7.5	7.0	7.9	5	15	80	1.0	1	5.0	2.5	5.3
BZT52C8V2S	WD	8.2	7.7	8.7	5	15	80	1.0	0.7	5.0	3.2	6.2
BZT52C9V1S	WE	9.1	8.5	9.6	5	15	100	1.0	0.5	6.0	3.8	7.0
BZT52C10S	WF	10	9.4	10.6	5	20	150	1.0	0.2	7.0	4.5	8.0
BZT52C11S	WG	11	10.4	11.6	5	20	150	1.0	0.1	8.0	5.4	9.0
BZT52C12S	WH	12	11.4	12.7	5	25	150	1.0	0.1	8.0	6.0	10.0
BZT52C13S	WI	13	12.4	14.1	5	30	170	1.0	0.1	8.0	7.0	11.0
BZT52C15S	WJ	15	13.8	15.6	5	30	200	1.0	0.1	10.5	9.2	13.0
BZT52C16S	WK	16	15.3	17.1	5	40	200	1.0	0.1	11.2	10.4	14.0
BZT52C18S	WL	18	16.8	19.1	5	45	225	1.0	0.1	12.6	12.4	16.0
BZT52C20S	WM	20	18.8	21.2	5	55	225	1.0	0.1	14.0	14.4	18.0
BZT52C22S	WN	22	20.8	23.3	5	55	250	1.0	0.1	15.4	16.4	20.0
BZT52C24S	WO	24	22.8	25.6	5	70	250	1.0	0.1	16.8	18.4	22.0
BZT52C27S	WP	27	25.1	28.9	2	80	300	0.5	0.1	18.9	21.4	25.3
BZT52C30S	WQ	30	28.0	32.0	2	80	300	0.5	0.1	21.0	24.4	29.4
BZT52C33S	WR	33	31.0	35.0	2	80	325	0.5	0.1	23.1	27.4	33.4
BZT52C36S	WS	36	34.0	38.0	2	90	350	0.5	0.1	25.2	30.4	37.4
BZT52C39S	WT	39	37.0	41.0	2	130	350	0.5	0.1	27.3	33.4	41.2

Notes: 2. Short duration test pulse used to minimize self-heating effect.
3. f = 1kHz.

Ordering Information (Note 4)

Device	Packaging	Shipping
(Type Number)-7*	SOD-323	3000/Tape & Reel

Notes: 4. *Add "-7" to the appropriate type number in Table 1 above example: 6.2V Zener = BZT52C6V2S-7.
5. For Packaging Details, go to our website at: http://www.diodes.com/datasheets/ap02007.pdf.
6. For Lead Free version (with Lead Free terminal finish) part number, please add "-F" suffix to part number above. Example: BZT52C39S-7-F.

Marking Information

XX = Product Type Marking Code
(See Table Above)

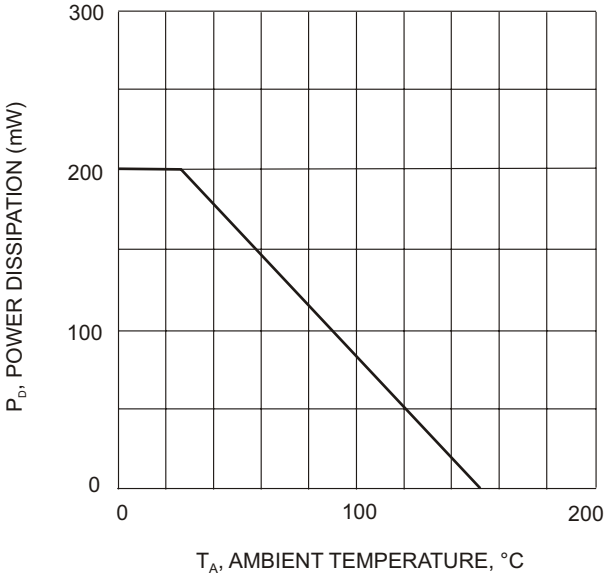

Fig. 1. Power Derating Curve

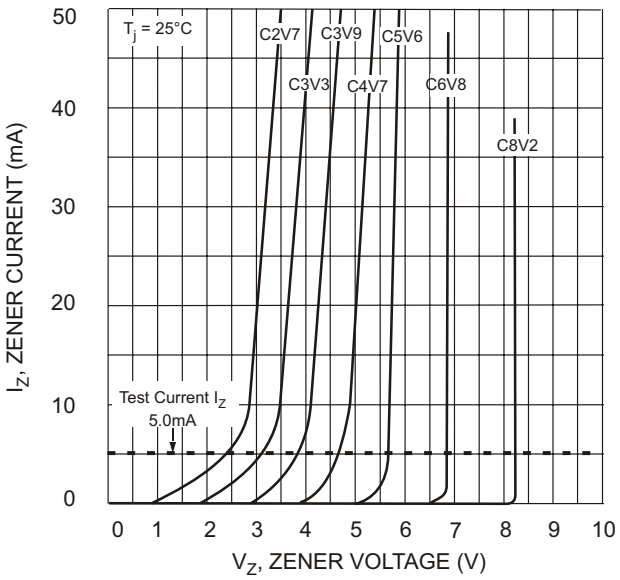

Fig. 2 Zener Breakdown Characteristics

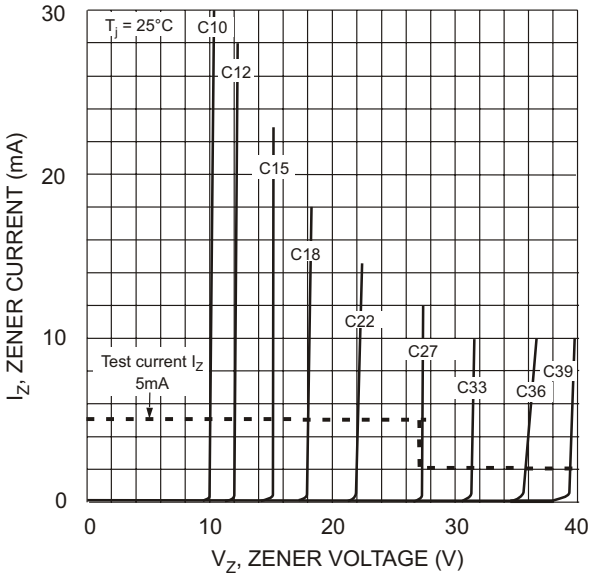

Fig. 3. Zener Breakdown Characteristics

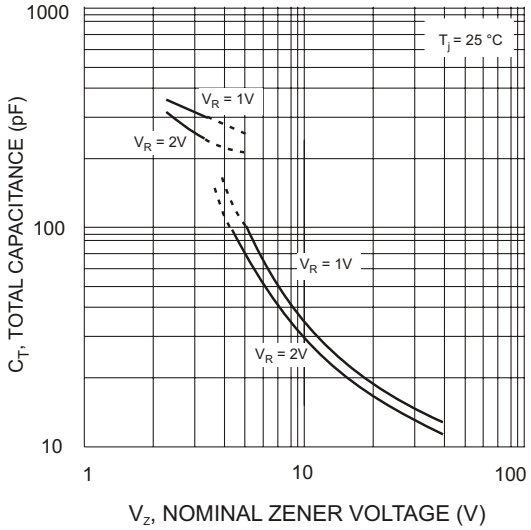

Fig. 4 Total Capacitance vs Nominal Zener Voltage

Copyright © Each Manufacturing Company.

All Datasheets cannot be modified without permission.

This datasheet has been download from :

www.AllDataSheet.com

100% Free DataSheet Search Site.

Free Download.

No Register.

Fast Search System.

www.AllDataSheet.com