FEATURES AND SPECIFICATIONS

4.20mm (.165”) Pitch Mini-Fit, BMI™ Slide-and-Lock Receptacle

44516
Dual Row, Panel Mount

查询"44516-0009"供应商

Higher Retention Forces Drive Design of Removable Panel-Mount Power Receptacle

The Mini-Fit, BMI Slide-and-Lock receptacle meets the needs of wire-to-wire and wire-to-board power applications where blind-mating and increased panel retention are desired. The panel retention force is significantly greater than that of standard blind-mate interface (BMI) designs. The housing is constructed of a durable polyester to withstand the weight and forces of wires used in higher circuit counts. In addition, the polyester housing material requires no moisturization to prevent breakage.

With its rugged thumb latch, the Mini-Fit, BMI Slide-and-Lock receptacle is easily mounted to and removed from a standard panel opening. The receptacle mates with a range of Mini-Fit™ plugs and headers and uses standard Mini-Fit series female crimp terminals and application tooling. No hardware or special tools are needed to mount the connector to the panel.

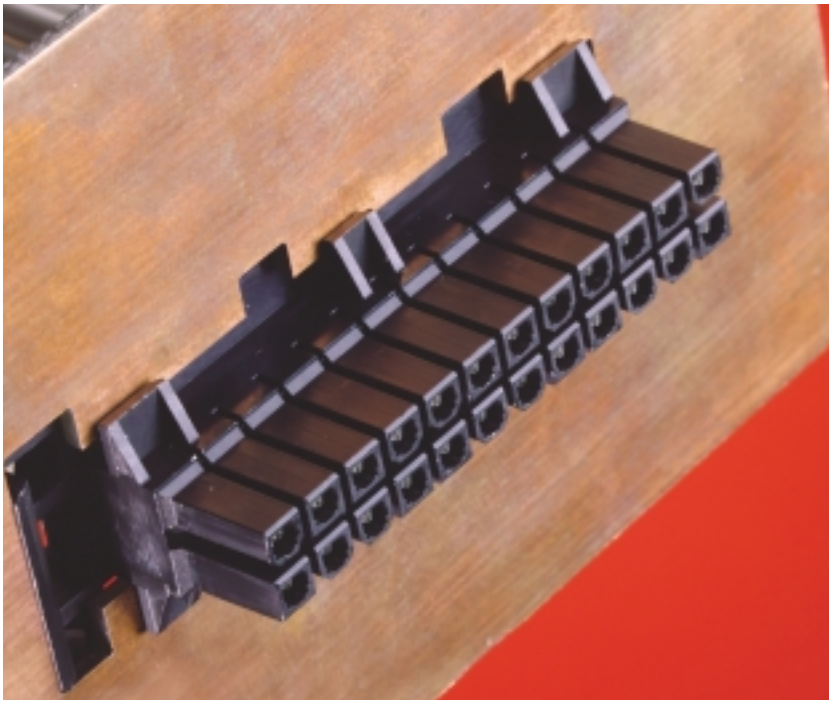

Features and Benefits

- Innovative panel-mount design provides easy insertion or removal from panel as well as significantly increases panel retention force over standard ear-type panel-mount housings
- Panel retention force of up to 881N (198lbf), depending on circuit size
- Connectors float in panel cutout up to 1.27mm (.050") in X-Y direction to self-align with the mating flange of Mini-Fit, BMI plugs or Mini-Fit, BMI, Mini-Fit, SMC™ and Mini-Fit, CPI™ headers
- Fully isolated terminals to protect contacts from damage
- Fully polarized to plug or header to prevent mismating
- Durable housing requires no moisturization to prevent breakage

Specifications

Reference Information
Packaging: Bag
UL File No.: E29179
CSA File No.: LR19980
Designed In: Millimeters
Used With: Terminals 5556, 44476, 44485
Mates With: 5559, 5566, 5569, 42404, 42440, 42475, 43770, 43759, 43810, 43879, 44068, 44472, 44474

Electrical
Voltage: 600V
Current: Rating depends on contact material, wire gauge and circuit size; ranges from 1.0 to 11.0A
Dielectric Strength: 1500V AC for one minute; no break-down
Insulation Resistance: 1000 MΩ min.

Mechanical
Contact Insertion Force: 14.70N (3.30 lbf) max.
Contact Retention Force: 29.40N (6.60lbf) min.
Mating Force Per Contact: 14.70N (3.30lbf) max.
Unmating Force Per Contact: 0.09N (0.02lbf) min.
Durability: 30 mating cycles

Physical
Housing: PBT Polyester, unfilled, black, 94V-0
Operating Temperature: -40 to +105°C
Panel Thickness: 1.19 to 1.57mm (.047 to .062”)

APPLICATIONS

查询"44516-0009"供应商

- Power Supplies
- Fan Tray Assemblies
- Backplane Applications
- Gaming Equipment
- Vending Machines

4.20mm (.165”) Pitch Mini-Fit, BMI™ Slide-and-Lock Receptacle

44516
Dual Row, Panel Mount

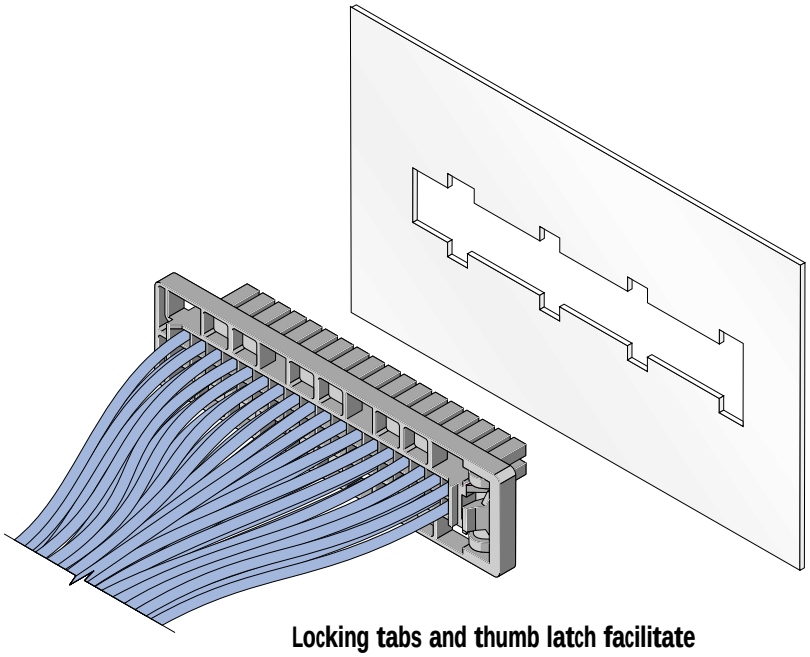

Locking tabs and thumb latch facilitate mounting to and removal from panel

ORDERING INFORMATION

Order No.	Circuit Size
44516-0009	18
44516-0012	24
44516-0013	36

Americas Headquarters
Lisle, Illinois 60532 U.S.A.
1-800-78MOLEX
amerinfo@molex.com

Far East North Headquarters
Yamato, Kanagawa, Japan
81-462-65-2324
feninfo@molex.com

Far East South Headquarters
Jurong, Singapore
65-6-268-6868
fesinfo@molex.com

European Headquarters
Munich, Germany
49-89-413092-0
eurinfo@molex.com

Corporate Headquarters
2222 Wellington Ct.
Lisle, IL 60532 U.S.A.
630-969-4550
Fax:630-969-1352

Visit our Web site at www.molex.com/product/power/mf.html

Printed in USA/2.5K/JI/JI/2003.06

©2003, Molex