查询"LM101AH883"供应商

National Semiconductor

August 2000

LM101A/LM201A/LM301A Operational Amplifiers

General Description

The LM101A series are general purpose operational amplifiers which feature improved performance over industry standards like the LM709. Advanced processing techniques make possible an order of magnitude reduction in input currents, and a redesign of the biasing circuitry reduces the temperature drift of input current. Improved specifications include:

- Offset voltage 3 mV maximum over temperature (LM101A/LM201A)
- Input current 100 nA maximum over temperature (LM101A/LM201A)
- Offset current 20 nA maximum over temperature (LM101A/LM201A)
- Guaranteed drift characteristics
- Offsets guaranteed over entire common mode and supply voltage ranges
- Slew rate of 10V/µs as a summing amplifier

This amplifier offers many features which make its application nearly foolproof: overload protection on the input and output, no latch-up when the common mode range is exceeded, and freedom from oscillations and compensation with a single 30 pF capacitor. It has advantages over internally compensated amplifiers in that the frequency compensation can be tailored to the particular application. For example, in low frequency circuits it can be overcompensated for increased stability margin. Or the compensation can be optimized to give more than a factor of ten improvement in high frequency performance for most applications.

In addition, the device provides better accuracy and lower noise in high impedance circuitry. The low input currents also make it particularly well suited for long interval integrators or timers, sample and hold circuits and low frequency waveform generators. Further, replacing circuits where matched transistor pairs buffer the inputs of conventional IC op amps, it can give lower offset voltage and a drift at a lower cost.

The LM101A is guaranteed over a temperature range of −55˚C to +125˚C, the LM201A from −25˚C to +85˚C, and the LM301A from 0˚C to +70˚C.

Fast AC/DC Converter

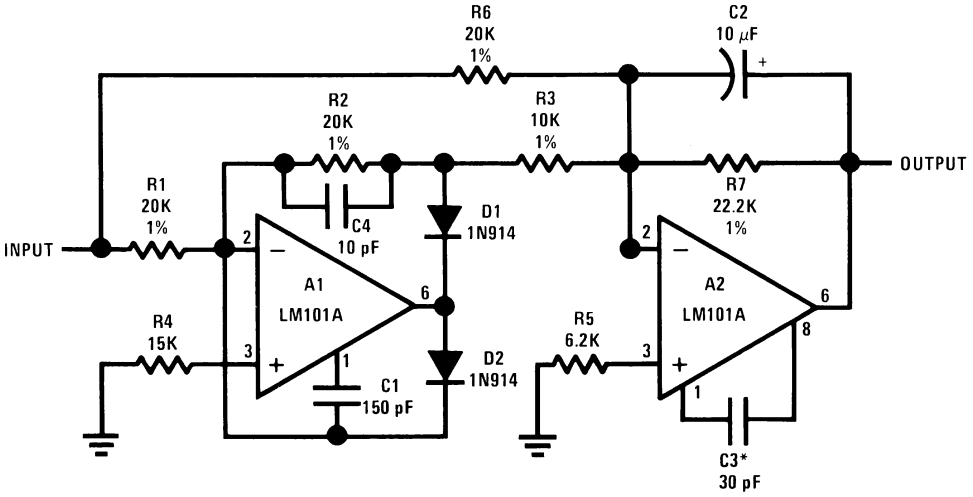

00775233

Note 1: Feedforward compensation can be used to make a fast full wave rectifier without a filter.

© 2004 National Semiconductor Corporation

查询"LM101AH883"供应商

Absolute Maximum Ratings (Note 2)

If Military/Aerospace specified devices are required, please contact the National Semiconductor Sales Office/ Distributors for availability and specifications.

	LM101A/LM201A	LM301A
Supply Voltage	±22V	±18V
Differential Input Voltage	±30V	±30V
Input Voltage (Note 3)	±15V	±15V
Output Short Circuit Duration (Note 4)	Continuous	Continuous
Operating Ambient Temp. Range	−55˚C to +125˚C (LM101A) −25˚C to +85˚C (LM201A)	0˚C to +70˚C
T_J Max		
H-Package	150˚C	100˚C
N-Package	150˚C	100˚C
J-Package	150˚C	100˚C
Power Dissipation at T_A = 25˚C		
H-Package (Still Air)	500 mW	300 mW
(400 LF/Min Air Flow)	1200 mW	700 mW
N-Package	900 mW	500 mW
J-Package	1000 mW	650 mW
Thermal Resistance (Typical) θ_{jA}		
H-Package (Still Air)	165˚C/W	165˚C/W
(400 LF/Min Air Flow)	67˚C/W	67˚C/W
N Package	135˚C/W	135˚C/W
J-Package	110˚C/W	110˚CmW
(Typical) θ_{jC}		
H-Package	25˚C/W	25˚C/W
Storage Temperature Range	−65˚C to +150˚C	−65˚C to +150˚C
Lead Temperature (Soldering, 10 sec.)		
Metal Can or Ceramic	300˚C	300˚C
Plastic	260˚C	260˚C
ESD Tolerance (Note 7)	2000V	2000V

Electrical Characteristics (Note 5)

$T_A = T_J$

Parameter	Conditions		LM101A/LM201A			LM301A			Units
			Min	Typ	Max	Min	Typ	Max	
Input Offset Voltage	T_A = 25˚C, $R_S \le$ 50 kΩ			0.7	2.0		2.0	7.5	mV
Input Offset Current	T_A = 25˚C			1.5	10		3.0	50	nA
Input Bias Current	T_A = 25˚C			30	75		70	250	nA
Input Resistance	T_A = 25˚C		1.5	4.0		0.5	2.0		MΩ
Supply Current	T_A = 25˚C	V_S = ±20V		1.8	3.0				mA
		V_S = ±15V					1.8	3.0	mA
Large Signal Voltage Gain	T_A = 25˚C, V_S = ±15V V_{OUT} = ±10V, $R_L \ge$ 2 kΩ		50	160		25	160		V/mV
Input Offset Voltage	$R_S \le$ 50 kΩ				3.0			10	mV
Average Temperature Coefficient of Input Offset Voltage	$R_S \le$ 50 kΩ			3.0	15		6.0	30	μV/˚C
Input Offset Current					20			70	nA
Average Temperature Coefficient of Input Offset Current	25˚C $\le T_A \le T_{MAX}$			0.01	0.1		0.01	0.3	nA/˚C
	$T_{MIN} \le T_A \le$ 25˚C			0.02	0.2		0.02	0.6	nA/˚C
Input Bias Current					0.1			0.3	μA

Electrical Characteristics (Note 5) (Continued)

T_A=查询"LM101AH883"供应商

Parameter	Conditions		LM101A/LM201A			LM301A			Units
			Min	Typ	Max	Min	Typ	Max	
Supply Current	$T_A = T_{MAX}$, $V_S = \pm 20V$			1.2	2.5				mA
Large Signal Voltage Gain	$V_S = \pm 15V$, $V_{OUT} = \pm 10V$ $R_L \geq 2k$		25			15			V/mV
Output Voltage Swing	$V_S = \pm 15V$	$R_L = 10\ k\Omega$	±12	±14		±12	±14		V
		$R_L = 2\ k\Omega$	±10	±13		±10	±13		V
Input Voltage Range	$V_S = \pm 20V$		±15						V
	$V_S = \pm 15V$			+15, −13		±12	+15, −13		V
Common-Mode Rejection Ratio	$R_S \leq 50\ k\Omega$		80	96		70	90		dB
Supply Voltage Rejection Ratio	$R_S \leq 50\ k\Omega$		80	96		70	96		dB

Note 2: Absolute Maximum Ratings indicate limits beyond which damage to the device may occur.Operating ratings indicate for which the device is functional, but do no guarantee specific performance limits. Electrical Characteristics state DC and AC electrical specifications under particular test conditions which guarantee specific limits. This assumes that the device is within the Operating Ratings. Specifications are not guaranteed for parameters where no limit is given, however, the typical value is a good indication of device performance.

Note 3: For supply voltages less than ±15V, the absolute maximum input voltage is equal to the supply voltage.

Note 4: Continuous short circuit is allowed for case temperatures to 125˚C and ambient temperatures to 75˚C for LM101A/LM201A, and 70˚C and 55˚C respectively for LM301A.

Note 5: Unless otherwise specified, these specifications apply for C1 = 30 pF, $\pm 5V \leq V_S \leq \pm 20V$ and $-55˚C \leq T_A \leq +125˚C$ (LM101A), $\pm 5V \leq V_S \leq \pm 20V$ and $-25˚C \leq T_A \leq +85˚C$ (LM201A), $\pm 5V \leq V_S \leq \pm 15V$ and $0˚C \leq T_A \leq +70˚C$ (LM301A).

Note 6: Refer to RETS101AX for LM101A military specifications and RETS101X for LM101 military specifications.

Note 7: Human body model, 100 pF discharged through 1.5 kΩ.

Typical Performance Characteristics

LM101A/LM201A

Input Voltage Range

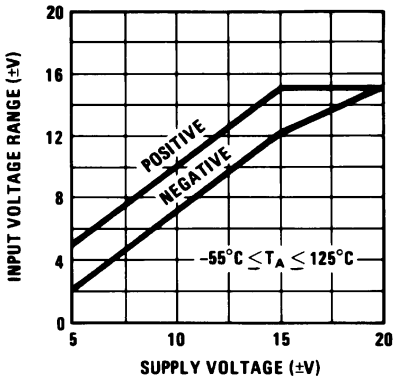

00775241

Output Swing

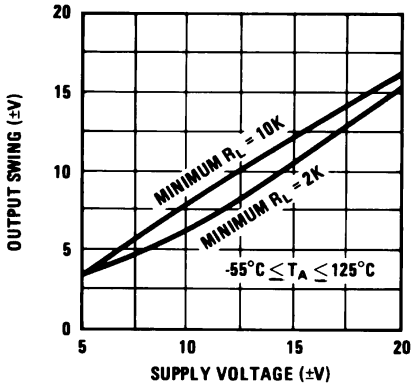

00775242

查询"LM101AH883"供应商

Typical Performance Characteristics LM101A/LM201A (Continued)

Voltage Gain

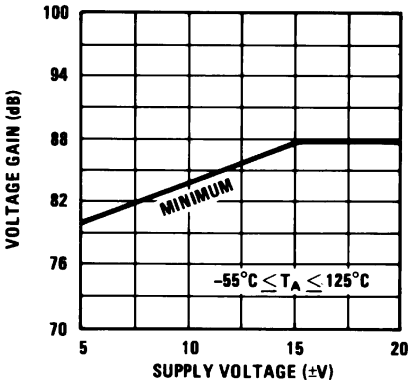

00775243

Guaranteed Performance Characteristics

LM301A

Input Voltage Range

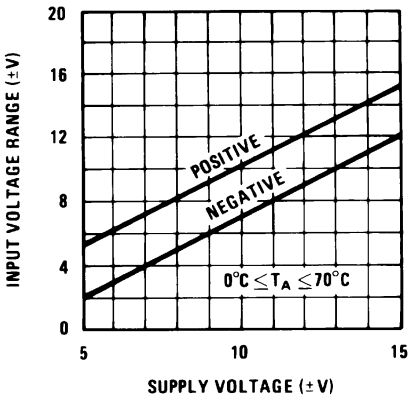

00775244

Output Swing

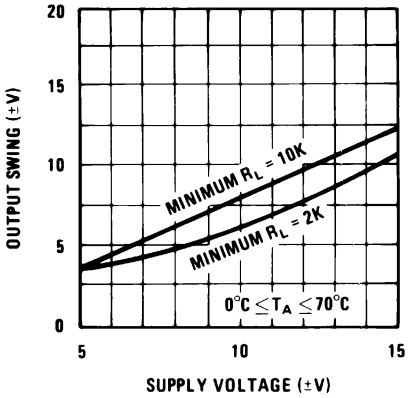

00775245

Voltage Gain

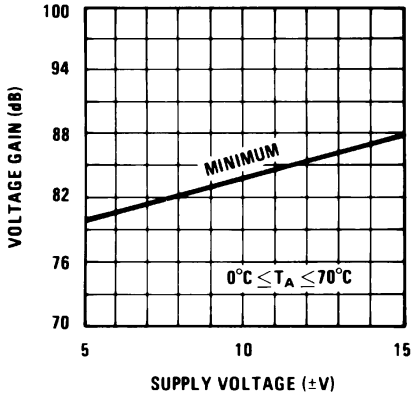

00775246

Typical Performance Characteristics

查询"LM101AH883"供应商

Supply Current

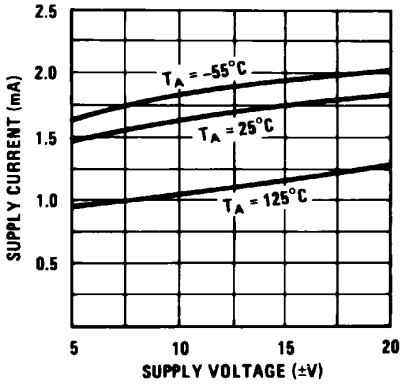

00775247

Voltage Gain

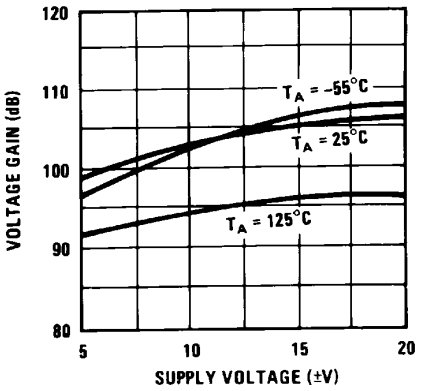

00775248

Maximum Power Dissipation

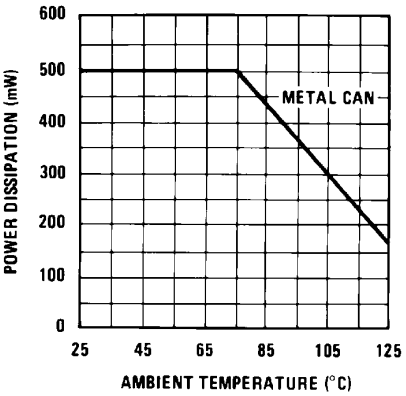

00775249

Input Current, LM101A/LM201A/LM301A

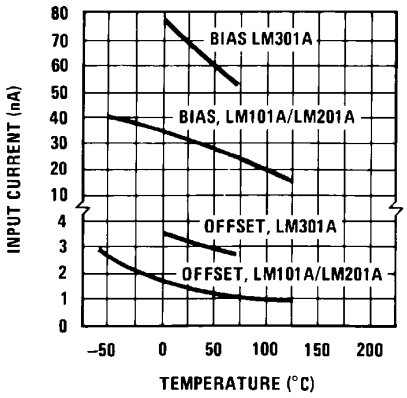

00775250

Current Limiting

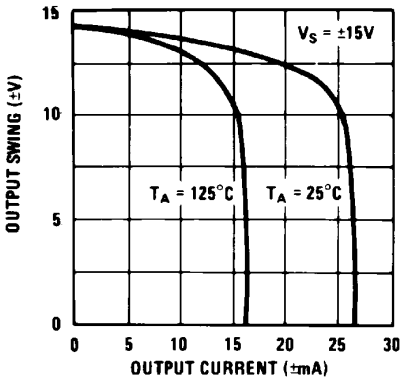

00775251

Input Noise Voltage

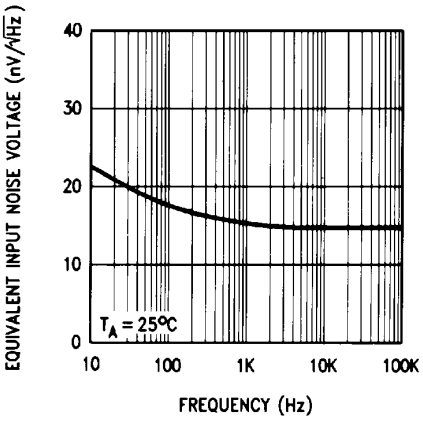

00775252

Typical Performance Characteristics (Continued)

查询"LM101AH883"供应商

Input Noise Current

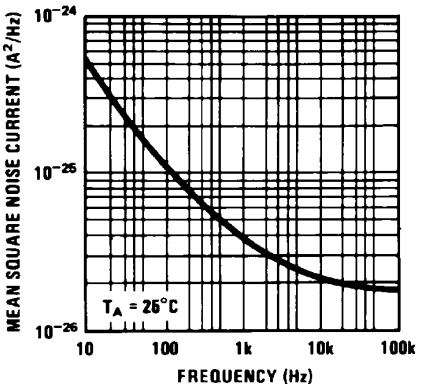

00775253

Common Mode Rejection

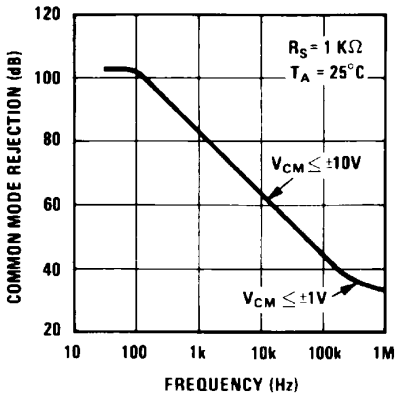

00775254

Power Supply Rejection

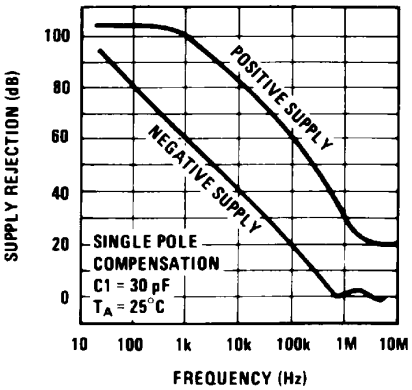

00775255

Closed Loop Output Impedance

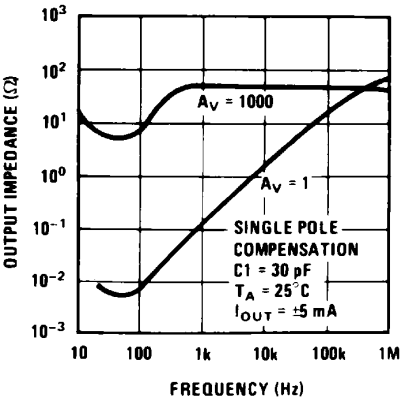

00775256

Typical Performance Characteristics for Various Compensation Circuits

查询"LM101AH883"供应商

(Note 9)

Single Pole Compensation

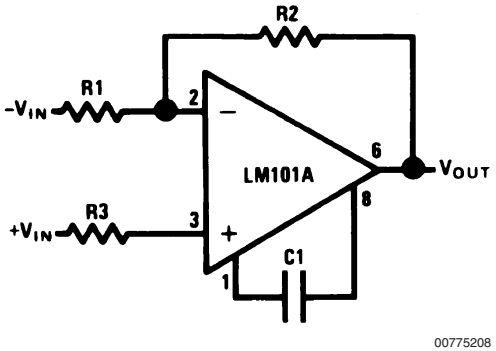

$$C1 \geq \frac{R1\ C_S}{R1 + R2}$$

C_S= 30 pF

Two Pole Compensation

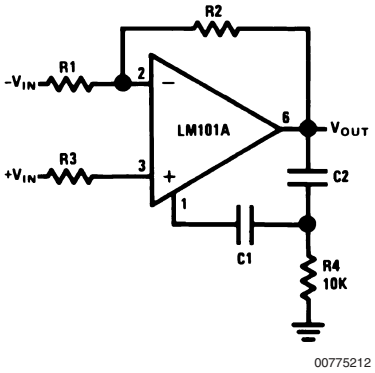

$$C1 \geq \frac{R1\ C_S}{R1 + R2}$$

C_S= 30 pF

C2 = 10 C1

Feedforward Compensation

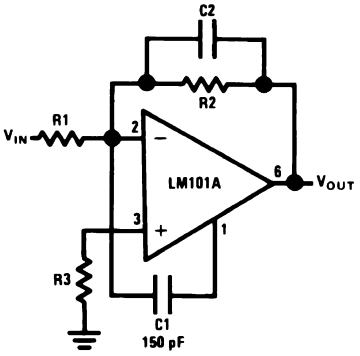

$$C2 = \frac{1}{2\pi\ f_o\ R2}$$

f_o= 3 MHz

Open Loop Frequency Response

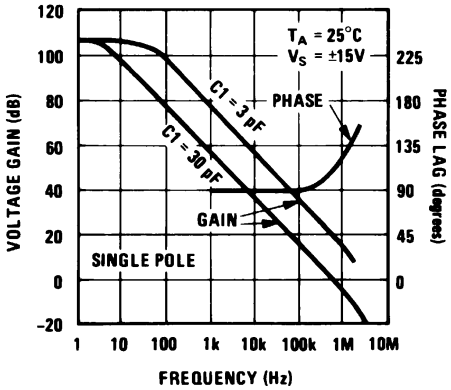

Open Loop Frequency Response

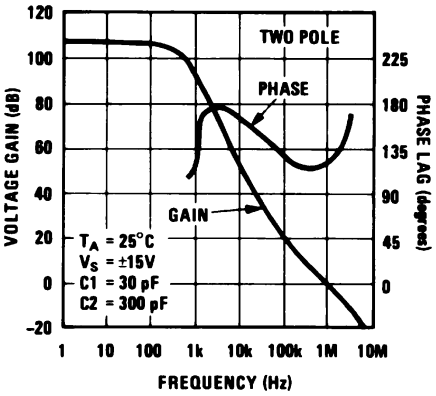

Open Loop Frequency Response

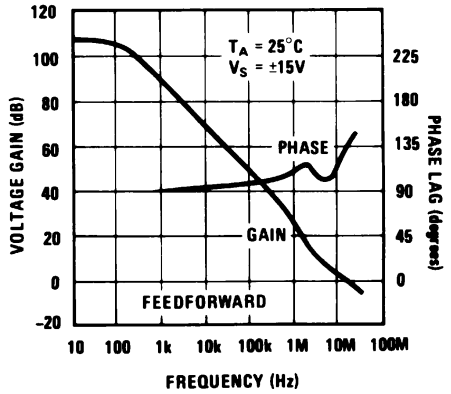

查询"LM101A/LH883"供应商

Typical Performance Characteristics for Various Compensation Circuits

(Note 9) (Continued)

Large Signal Frequency Response

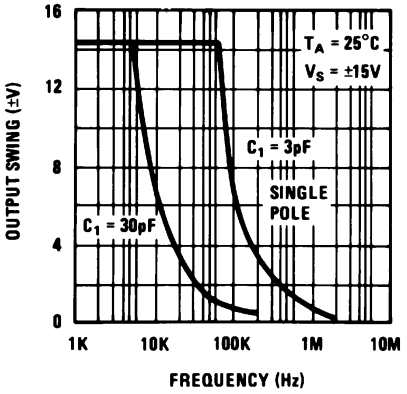

00775210

Large Signal Frequency Response

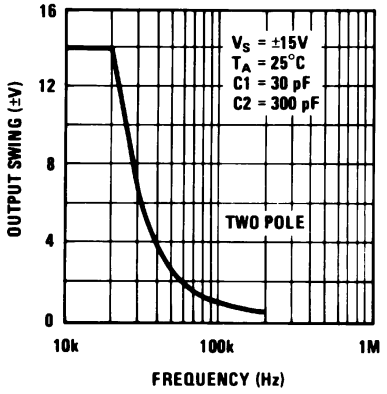

00775214

Large Signal Frequency Response

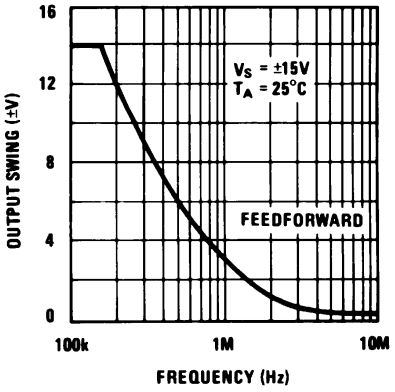

00775218

Voltage Follower Pulse Response

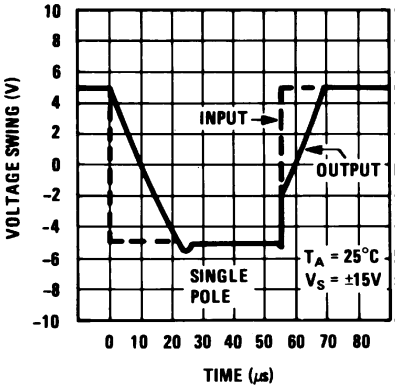

00775211

Voltage Follower Pulse Response

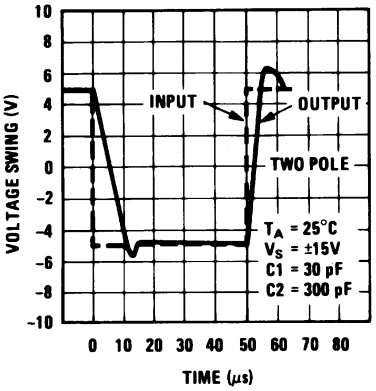

00775215

Inverter Pulse Response

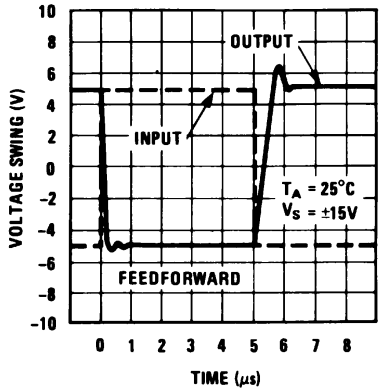

00775219

Typical Applications (Note 9)

查询"LM101AH883"供应商

Variable Capacitance Multiplier

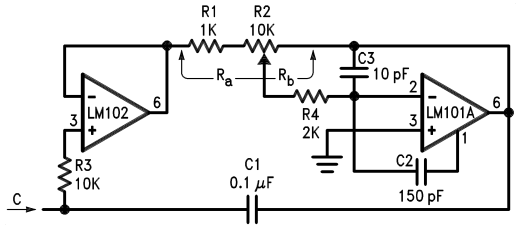

00775220

$$C = 1 + \frac{R_b}{R_a} C1$$

Simulated Inductor

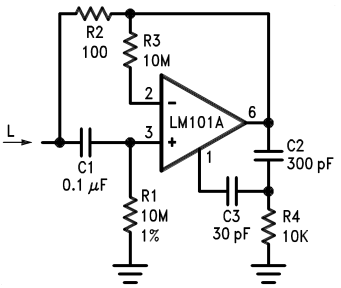

00775221

L ≃ R1 R2 C1

R_S = R2

R_P = R1

Fast Inverting Amplifier with High Input Impedance

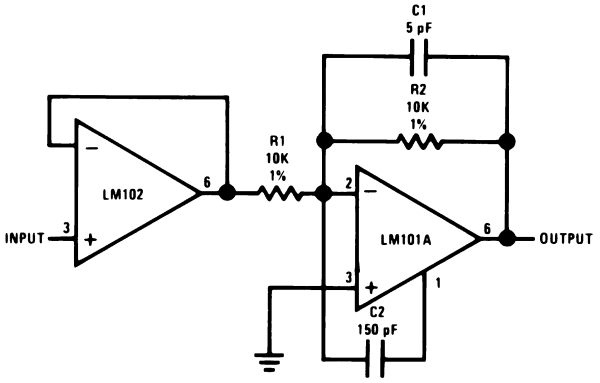

00775222

Inverting Amplifier with Balancing Circuit

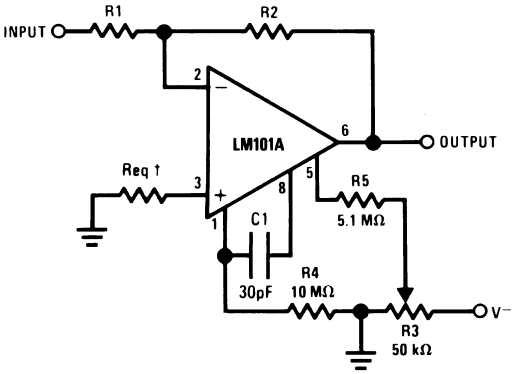

00775223

†May be zero or equal to parallel combination of R1 and R2 for minimum offset.

Sine Wave Oscillator

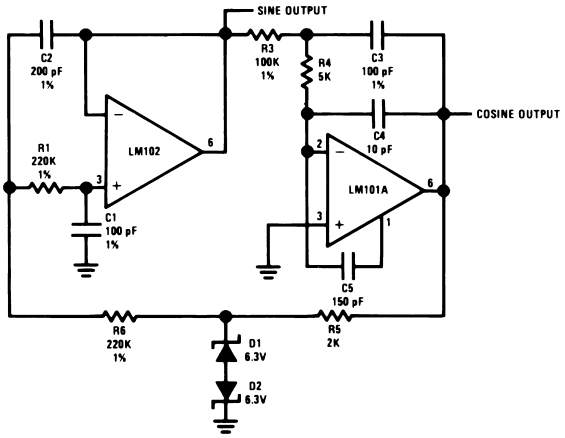

00775224

f_o = 10 kHz

Integrator with Bias Current Compensation

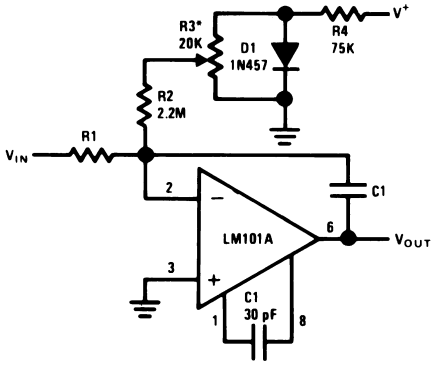

00775225

*Adjust for zero integrator drift. Current drift typically 0.1 nA/˚C over −55˚C to +125˚C temperature range.

Application Hints (Note 9)

查询"LM101AH883"供应商

Protecting Against Gross Fault Conditions

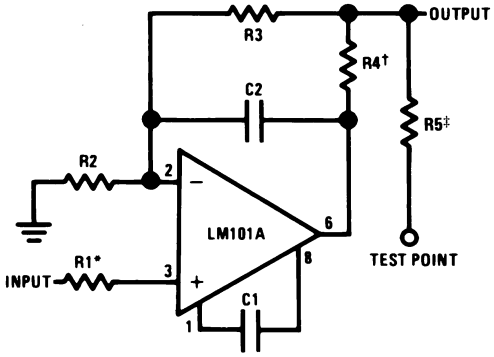

00775226

*Protects input

†Protects output

‡Protects output — not needed when R4 is used.

Compensating for Stray Input Capacitances or Large Feedback Resistor

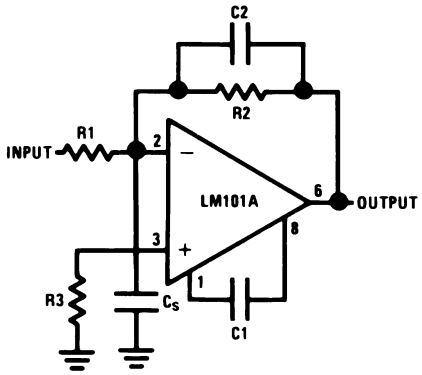

00775227

$$C2 = \frac{R1\ C_S}{R2}$$

Isolating Large Capacitive Loads

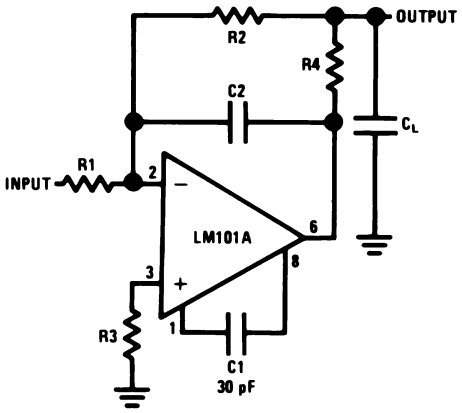

00775228

Although the LM101A is designed for trouble free operation, experience has indicated that it is wise to observe certain precautions given below to protect the devices from abnormal operating conditions. It might be pointed out that the

advice given here is applicable to practically any IC op amp, although the exact reason will may differ with different devices.

查询"LM101AH883"供应商

When driving either input from a low-impedance source, a limiting resistor should be placed in series with the input lead to limit the peak instantaneous output current of the source to something less than 100 mA. This is especially important when the inputs go outside a piece of equipment where they could accidentally be connected to high voltage sources. Large capacitors on the input (greater than 0.1 µF) should be treated as a low source impedance and isolated with a resistor. Low impedance sources do not cause a problem unless their output voltage exceeds the supply voltage. However, the supplies go to zero when they are turned off, so the isolation is usually needed.

The output circuitry is protected against damage from shorts to ground. However, when the amplifier output is connected to a test point, it should be isolated by a limiting resistor, as test points frequently get shorted to bad places. Further, when the amplifer drives a load external to the equipment, it is also advisable to use some sort of limiting resistance to preclude mishaps.

Precautions should be taken to insure that the power supplies for the integrated circuit never become reversed—even under transient conditions. With reverse voltages greater than 1V, the IC will conduct excessive current, fusing internal aluminum interconnects. If there is a possibility of this happening, clamp diodes with a high peak current rating should be installed on the supply lines. Reversal of the voltage between V^+ and V^- will always cause a problem, although reversals with respect to ground may also give difficulties in many circuits.

The minimum values given for the frequency compensation capacitor are stable only for source resistances less than 10 kΩ, stray capacitances on the summing junction less than 5 pF and capacitive loads smaller than 100 pF. If any of these conditions are not met, it becomes necessary to overcompensate the amplifier with a larger compensation capacitor. Alternately, lead capacitors can be used in the feedback network to negate the effect of stray capacitance and large feedback resistors or an RC network can be added to isolate capacitive loads.

Although the LM101A is relatively unaffected by supply bypassing, this cannot be ignored altogether. Generally it is necessary to bypass the supplies to ground at least once on every circuit card, and more bypass points may be required if more than five amplifiers are used. When feed-forward compensation is employed, however, it is advisable to bypass the supply leads of each amplifier with low inductance capacitors because of the higher frequencies involved.

Typical Applications (Note 9)

Standard Compensation and Offset Balancing Circuit

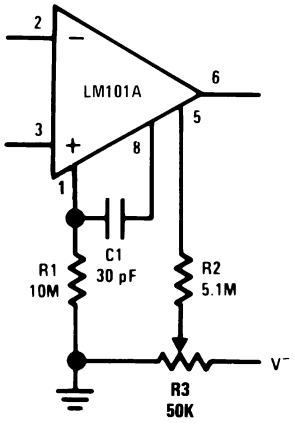

00775229

Fast Voltage Follower

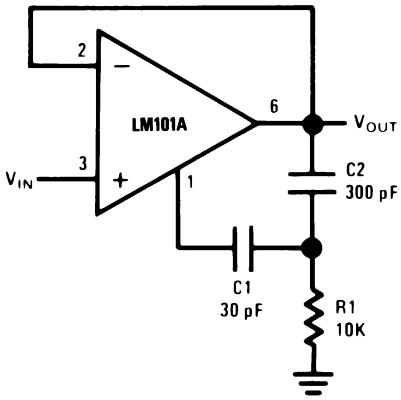

00775231

Power Bandwidth: 15 kHz

Slew Rate: 1V/µs

Fast Summing Amplifier

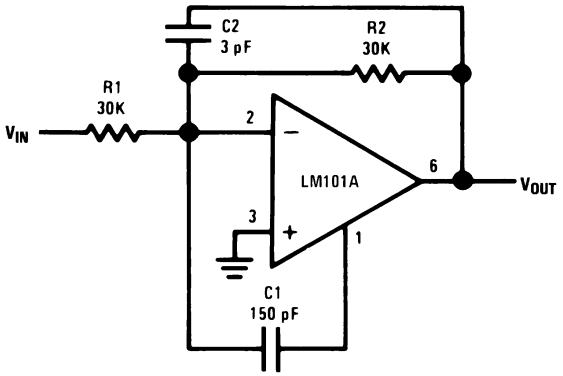

00775230

Power Bandwidth: 250 kHz

Small Signal Bandwiidth: 3.5 MHz

Slew Rate: 10V/µs

查询"LM101AH883"供应商

Typical Applications (Note 9) (Continued)

Bilateral Current Source

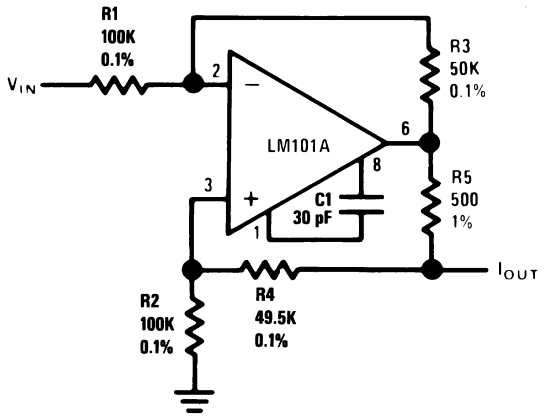

00775232

$$I_{OUT} = \frac{R3\ V_{IN}}{R1\ R5}$$

R3 = R4 + R5

R1 = R2

Fast AC/DC Converter (Note 8)

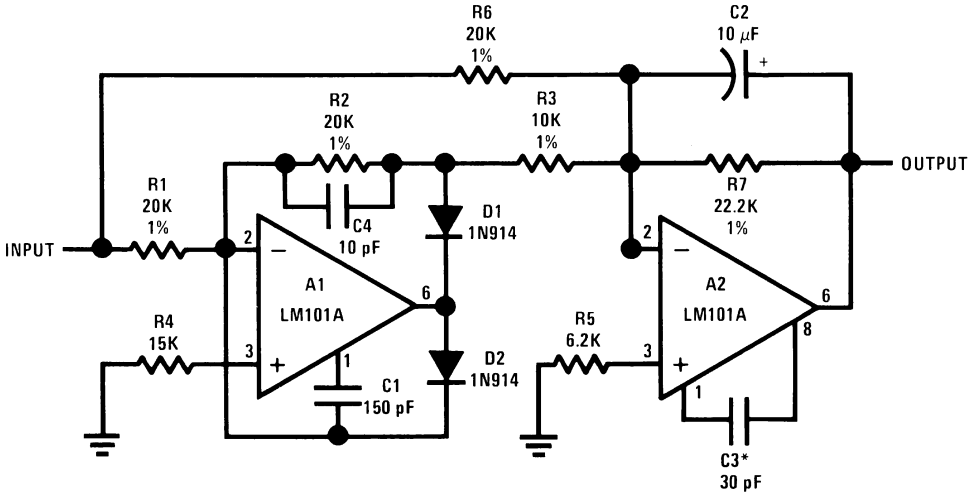

00775233

Note 8: Feedforward compensation can be used to make a fast full wave rectifier without a filter.

Typical Applications (Note 9) (Continued)

查询"LM101AH883"供应商

Instrumentation Amplifier

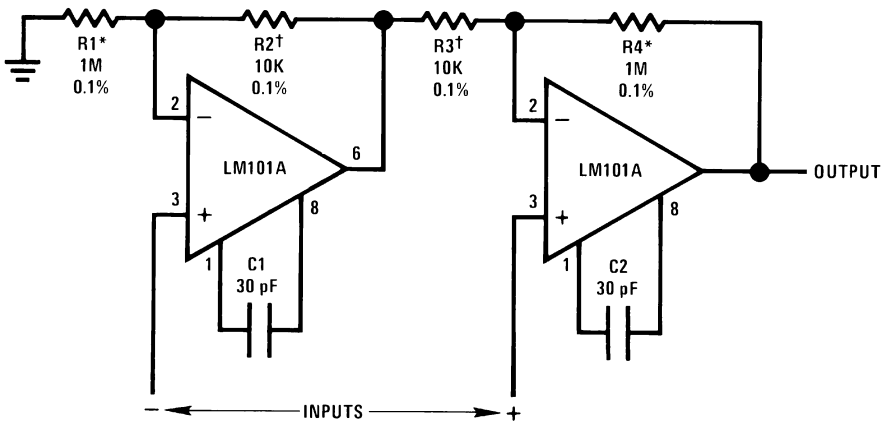

R1 = R4; R2 = R3

$$A_V = 1 + \frac{R1}{R2}$$

*,† Matching determines CMRR.

Integrator with Bias Current Compensation

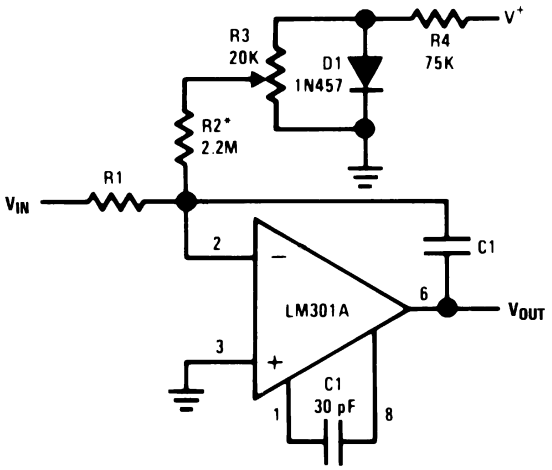

*Adjust for zero integrator drift. Current drift typically 0.1 nA/˚C over 0˚C to +70˚C temperature range.

Voltage Comparator for Driving RTL Logic or High Current Driver

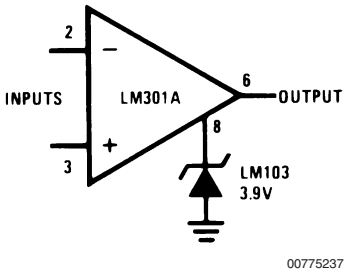

查询"LM101AH883"供应商

Typical Applications (Note 9) (Continued)

Low Frequency Square Wave Generator

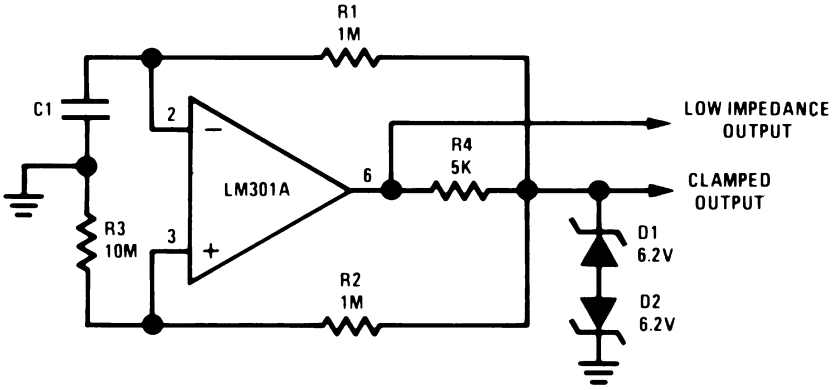

00775236

Low Drift Sample and Hold

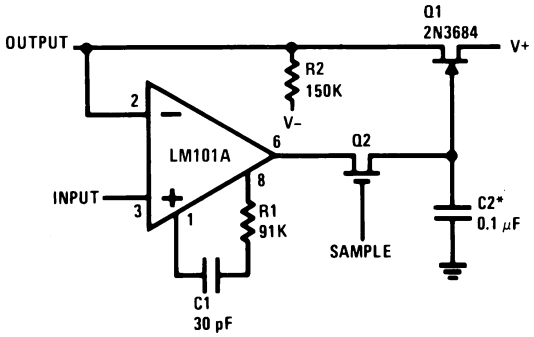

00775238

*Polycarbonate-dielectric capacitor

Voltage Comparator for Driving DTL or TTL Integrated Circuits

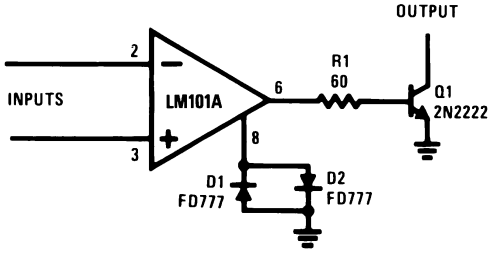

00775239

Schematic (Note 9)

查询"LM101AH883"供应商

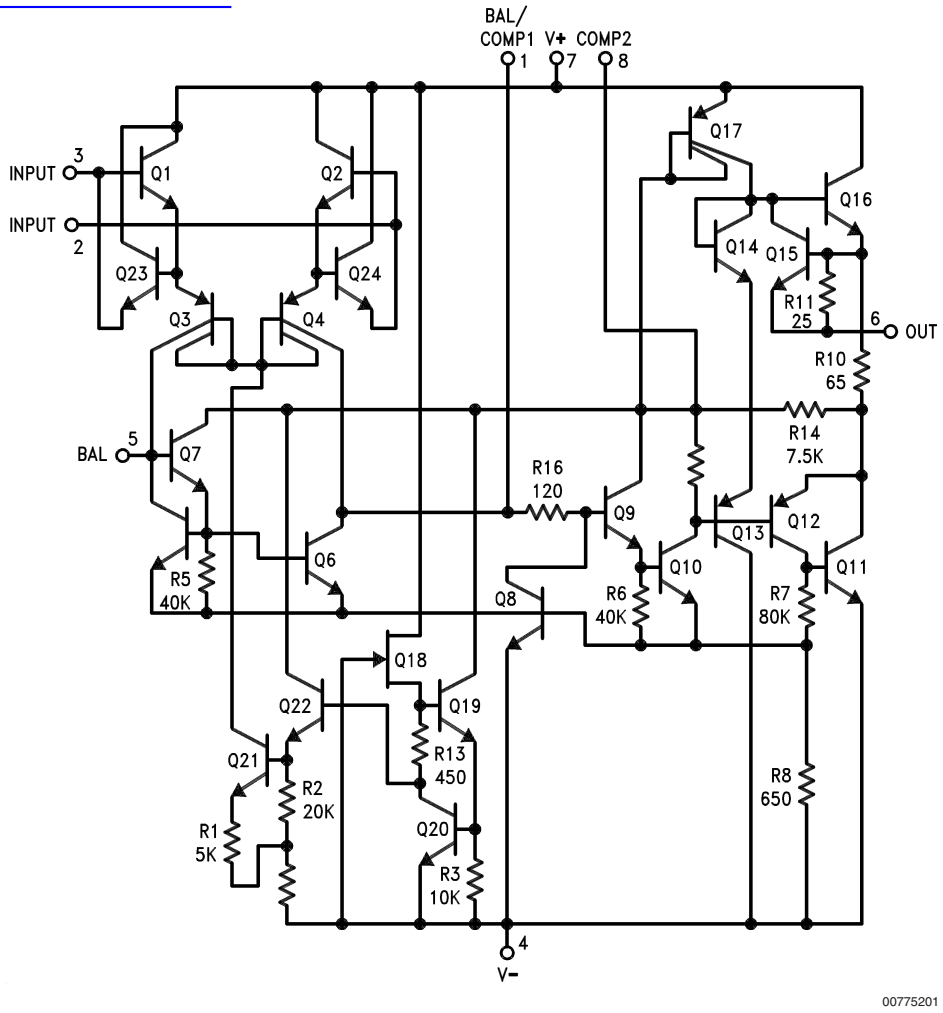

Note 9: Pin connections shown are for 8-pin packages.

Connection Diagrams

(Top View)

Dual-In-Line Package

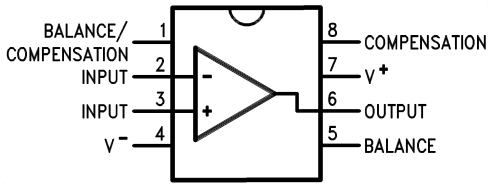

Order Number LM101AJ, LM101J/883 (Note 10)**, LM201AN or LM301AN**
See NS Package Number J08A or N08E

Ceramic Flatpack Package

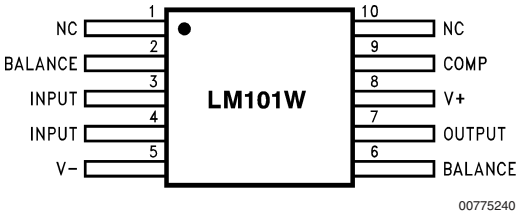

Order Number LM101AW/883 or LM101W/883
See NS Package Number W10A

查询"LM101AH883"供应商

Connection Diagrams (Top View, Continued)

Metal Can Package

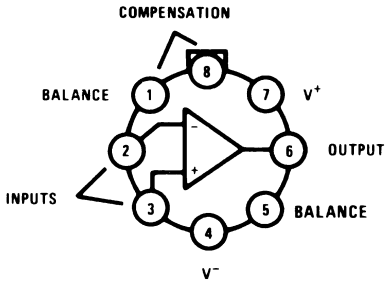

00775202

Note: Pin 4 connected to case.

Order Number LM101AH, LM101AH/883 (Note 10), **LM201AH or LM301AH**
See NS Package Number H08C

Dual-In-Line Package

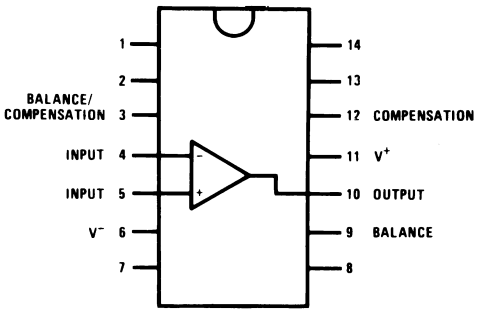

00775203

Order Number LM101AJ-14/883 (Note 10)
See NS Package Number J14A

Note 10: Available per JM38510/10103.

Physical Dimensions inches (millimeters)

unless otherwise noted

查询"LM101AH883"供应商

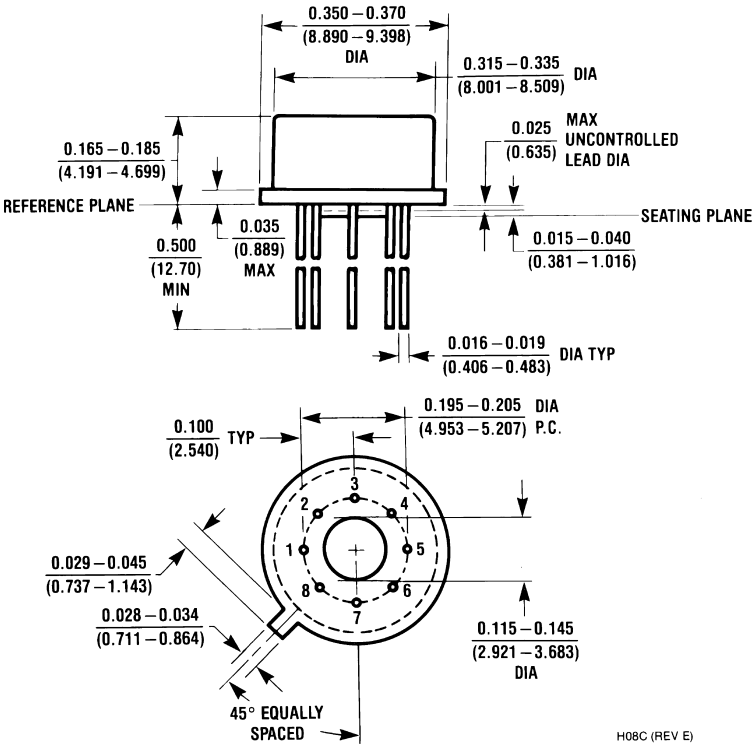

Metal Can Package (H)
Order Number LM101AH, LM101AH/883
LM201AH or LM301AH
NS Package Number H08C

查询"LM101AH883"供应商

Physical Dimensions inches (millimeters) unless otherwise noted (Continued)

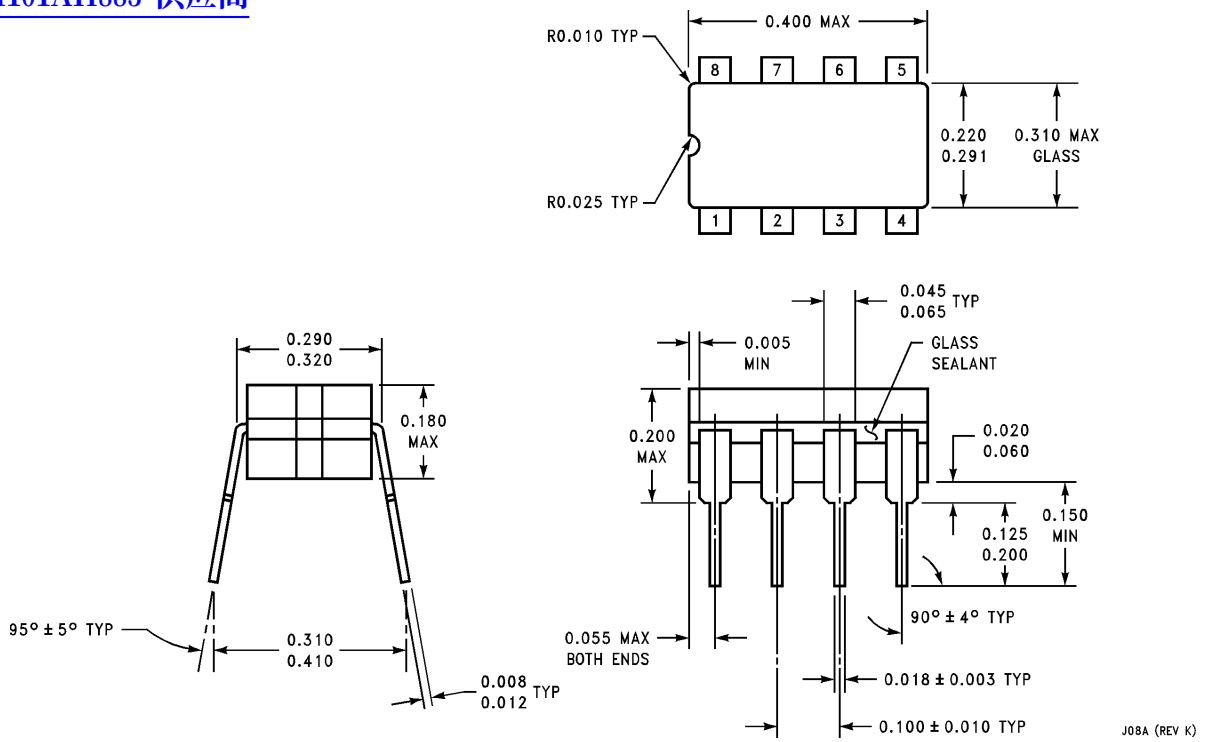

Ceramic Dual-In-Line Package (J)
Order Number LM101J/883 or LM101AJ
NS Package Number J08A

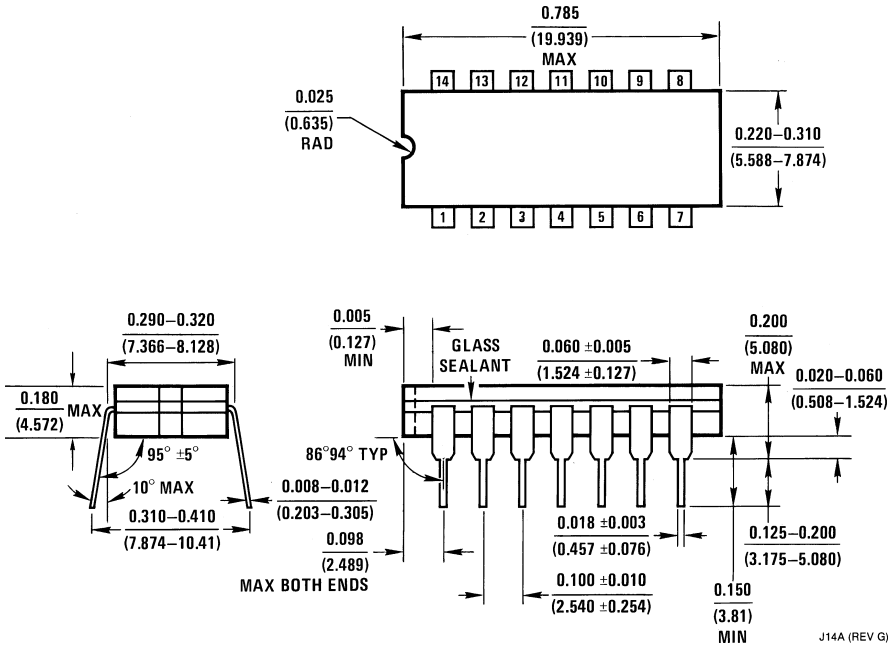

Ceramic Dual-In-Line Package (J)
Order Number LM101AJ-14/883
NS Package Number J14A

Physical Dimensions inches (millimeters) unless otherwise noted (Continued)

查询"LM101AH883"供应商

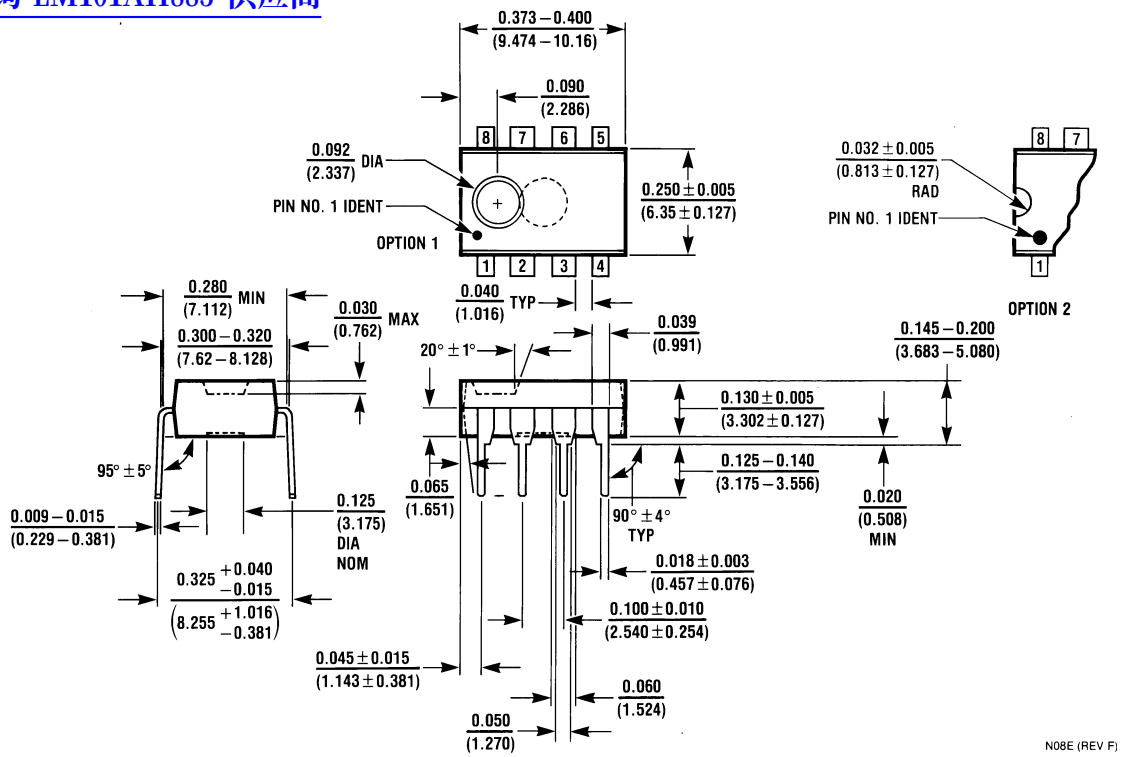

Molded Dual-In-Line Package (N)
Order Number LM201AN or LM301AN
NS Package Number N08E

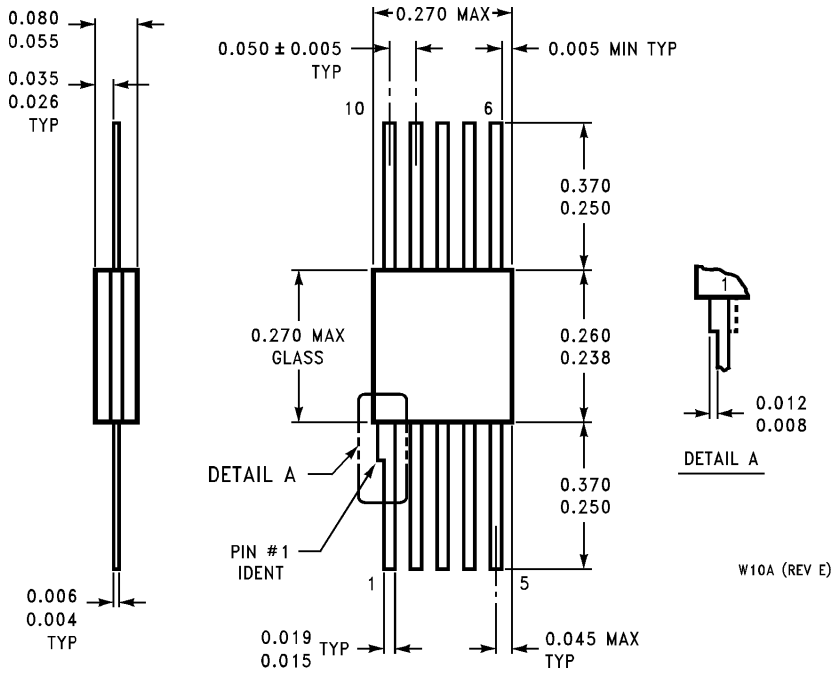

Ceramic Flatpack Package (W)
Order Number LM101AW/883 or LM101W/883
NS Package Number W10A

查询"LM101AH883"供应商

Notes

LIFE SUPPORT POLICY

NATIONAL'S PRODUCTS ARE NOT AUTHORIZED FOR USE AS CRITICAL COMPONENTS IN LIFE SUPPORT DEVICES OR SYSTEMS WITHOUT THE EXPRESS WRITTEN APPROVAL OF THE PRESIDENT AND GENERAL COUNSEL OF NATIONAL SEMICONDUCTOR CORPORATION. As used herein:

1. Life support devices or systems are devices or systems which, (a) are intended for surgical implant into the body, or (b) support or sustain life, and whose failure to perform when properly used in accordance with instructions for use provided in the labeling, can be reasonably expected to result in a significant injury to the user.
2. A critical component is any component of a life support device or system whose failure to perform can be reasonably expected to cause the failure of the life support device or system, or to affect its safety or effectiveness.

BANNED SUBSTANCE COMPLIANCE

National Semiconductor certifies that the products and packing materials meet the provisions of the Customer Products Stewardship Specification (CSP-9-111C2) and the Banned Substances and Materials of Interest Specification (CSP-9-111S2) and contain no "Banned Substances" as defined in CSP-9-111S2.

National Semiconductor
Americas Customer
Support Center
Email: new.feedback@nsc.com
Tel: 1-800-272-9959

www.national.com

National Semiconductor
Europe Customer Support Center
Fax: +49 (0) 180-530 85 86
Email: europe.support@nsc.com
Deutsch Tel: +49 (0) 69 9508 6208
English Tel: +44 (0) 870 24 0 2171
Français Tel: +33 (0) 1 41 91 8790

National Semiconductor
Asia Pacific Customer
Support Center
Email: ap.support@nsc.com

National Semiconductor
Japan Customer Support Center
Fax: 81-3-5639-7507
Email: jpn.feedback@nsc.com
Tel: 81-3-5639-7560

National does not assume any responsibility for use of any circuitry described, no circuit patent licenses are implied and National reserves the right at any time without notice to change said circuitry and specifications.