查询"TPS3836H30-Q1"供应商

- Qualified for Automotive Applications
- Customer-Specific Configuration Control Can Be Supported Along With Major-Change Approval
- ESD Protection Exceeds 2000 V Per MIL-STD-883, Method 3015; Exceeds 200 V Using Machine Model (C = 200 pF, R = 0)
- Supply Current of 220 nA (Typ)
- Precision Supply Voltage Supervision Range: 1.8 V, 2.5 V, 3.0 V, 3.3 V
- Power-On Reset Generator With Selectable Delay Time of 10 ms or 200 ms
- Push/Pull $\overline{\text{RESET}}$ Output (TPS3836), RESET Output (TPS3837), or Open-Drain $\overline{\text{RESET}}$ Output (TPS3838)
- Manual Reset
- 5-Pin SOT-23 Package
- Temperature Range: –40°C to 125°C

- Applications Include
  - Applications Using Automotive Low-Power DSPs, Microcontrollers, or Microprocessors
  - Battery-Powered Equipment
  - Intelligent Instruments
  - Wireless Communication Systems
  - Automotive Systems

TPS3836, TPS3838
DBV PACKAGE
(TOP VIEW)

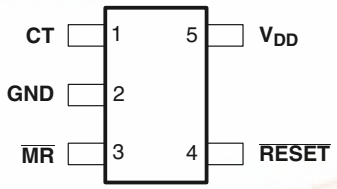

TPS3837
DBV PACKAGE
(TOP VIEW)

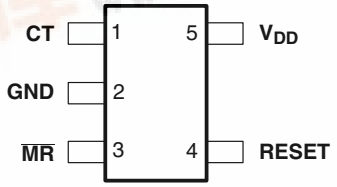

description

The TPS3836, TPS3837, TPS3838 families of supervisory circuits provide circuit initialization and timing supervision, primarily for DSP and processor-based systems.

During power on, $\overline{\text{RESET}}$ is asserted when the supply voltage V_{DD} becomes higher than 1.1 V. Thereafter, the supervisory circuit monitors V_{DD} and keeps $\overline{\text{RESET}}$ output active as long as V_{DD} remains below the threshold voltage V_{IT}. An internal timer delays the return of the output to the inactive state (high) to ensure proper system reset. The delay time starts after V_{DD} has risen above the threshold voltage V_{IT}.

When CT is connected to GND a fixed delay time of typical 10 ms is asserted. When connected to V_{DD} the delay time is typically 200 ms.

When the supply voltage drops below the threshold voltage V_{IT}, the output becomes active (low) again.

All the devices of this family have a fixed-sense threshold voltage V_{IT} set by an internal voltage divider.

The TPS3836 has an active-low push-pull $\overline{\text{RESET}}$ output. The TPS3837 has active-high push-pull RESET, and TPS3838 integrates an active-low open-drain $\overline{\text{RESET}}$ output.

Please be aware that an important notice concerning availability, standard warranty, and use in critical applications of Texas Instruments semiconductor products and disclaimers thereto appears at the end of this data sheet.

PRODUCTION DATA information is current as of publication date. Products conform to specifications per the terms of Texas Instruments standard warranty. Production processing does not necessarily include testing of all parameters.

Copyright © 2007, Texas Instruments Incorporated

找PDF 维库一下 pdf.dzsc.com

description (continued)

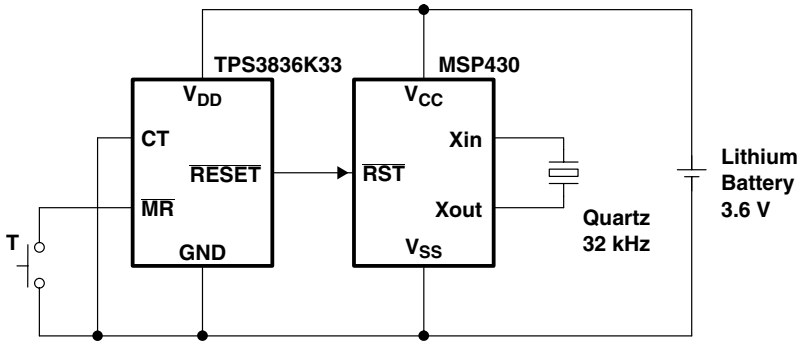

TYPICAL OPERATING CIRCUIT

The product spectrum is designed for supply voltages of 1.8 V, 2.5 V, 3 V, and 3.3 V. The circuits are available in a 5-pin SOT-23 package. The TPS3836-Q-Q1, TPS3837-Q-Q1, TPS3838-Q-Q1 families are characterized for operation over a temperature range of –40°C to 125°C.

PACKAGE INFORMATION

T_A	DEVICE NAME	THRESHOLD VOLTAGE	SYMBOL
–40°C to 125°C	TPS3836E18QDBVRQ1†	1.71 V	PDNQ
	TPS3836J25QDBVRQ1†	2.25 V	PDSQ
	TPS3836H30QDBVRQ1†	2.79 V	PHRQ
	TPS3836L30QDBVRQ1†	2.64 V	PCAQ
	TPS3836K33QDBVRQ1†	2.93 V	PDTQ
	TPS3837E18QDBVRQ1†	1.71 V	PDOQ
	TPS3837J25QDBVRQ1†	2.25 V	PDRQ
	TPS3837L30QDBVRQ1†	2.64 V	PCBQ
	TPS3837K33QDBVRQ1†	2.93 V	PDUQ
	TPS3838E18QDBVRQ1†	1.71 V	PDQQ
	TPS3838J25QDBVRQ1†	2.25 V	PDPQ
	TPS3838L30QDBVRQ1†	2.64 V	PCCQ
	TPS3838K33QDBVRQ1†	2.93 V	PDVQ

† DBVR indicates tape and reel of 3000 parts.

ORDERING INFORMATION

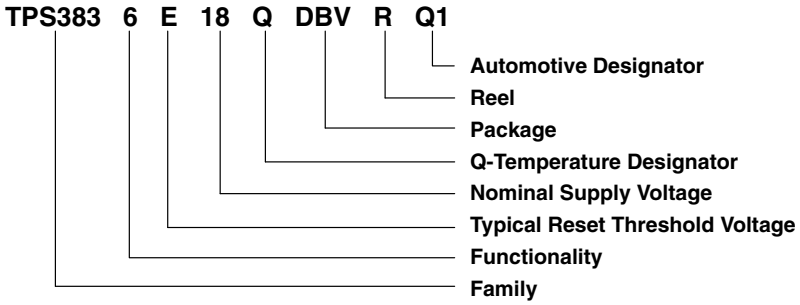

查询"TPS3836H30-Q1"供应商

FUNCTION TABLE TPS3836, TPS3837, TPS3838

$\overline{MR}$	$V_{DD} > V_{IT}$	$\overline{RESET}$†	RESET‡
L	0	L	H
L	1	L	H
H	0	L	H
H	1	H	L

† TPS3836 and TPS3838
‡ TPS3837

functional block diagram

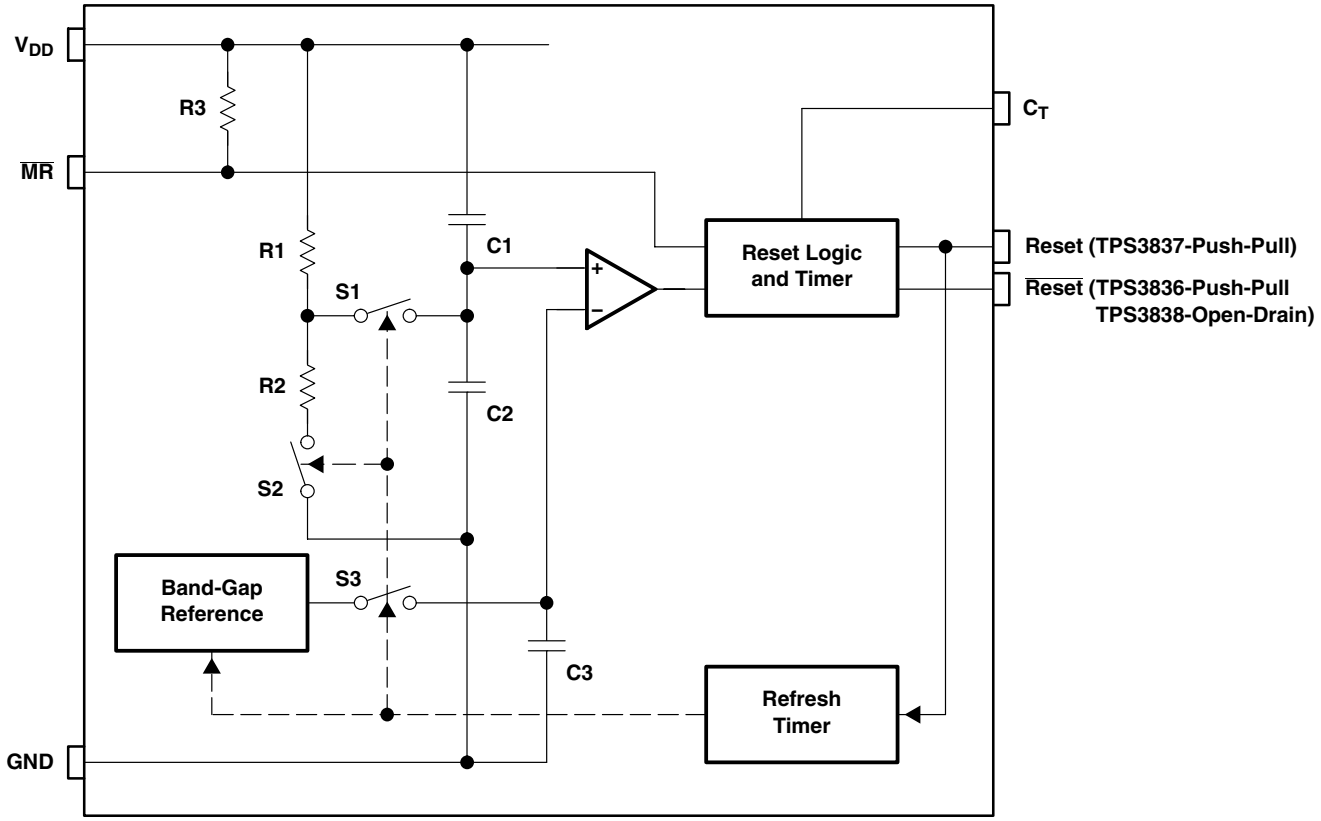

timing diagram

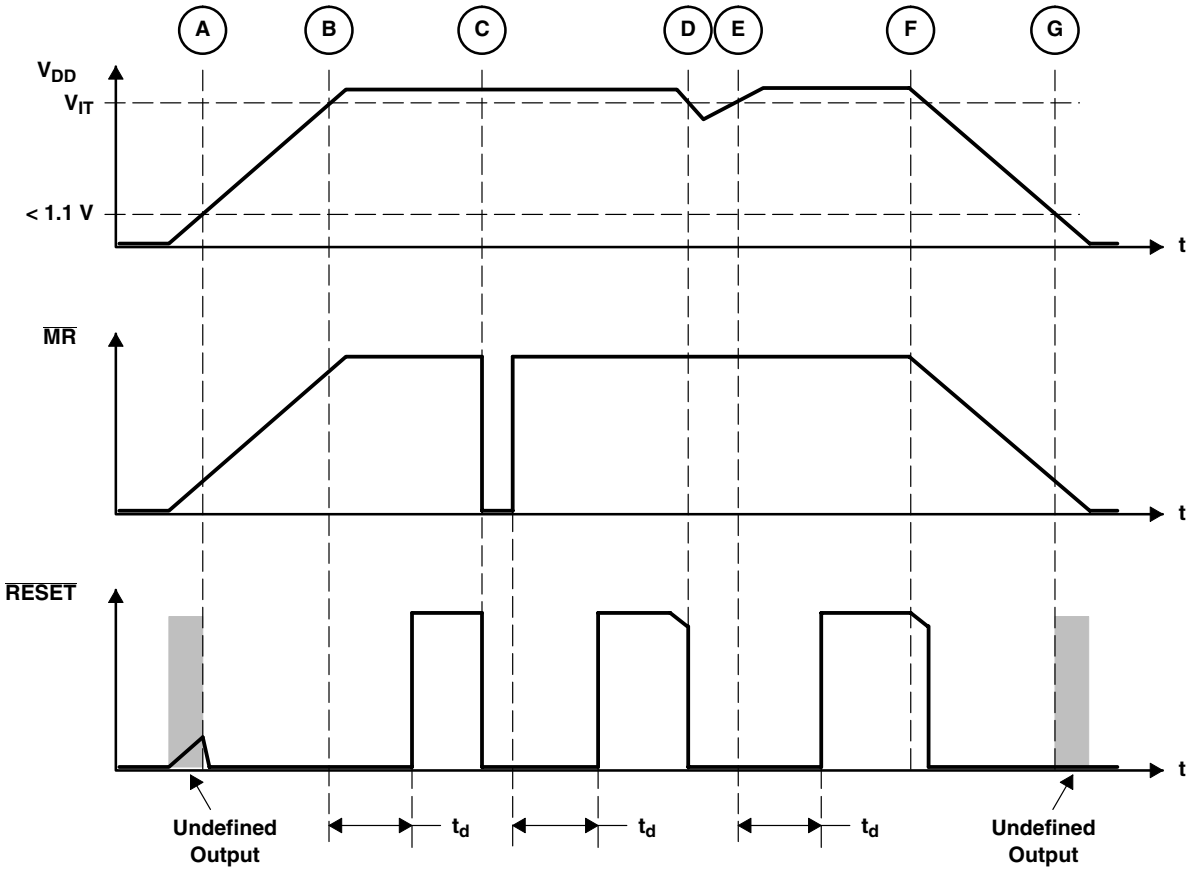

查询"TPS3836H30-Q1"供应商

absolute maximum ratings over operating free-air temperature range (unless otherwise noted)†

Supply voltage, V_{DD} (see Note 1) . . . . . 7 V
All other pins (see Note 1) . . . . . –0.3 V to 7 V
Maximum low output current, I_{OL} . . . . . 5 mA
Maximum high output current, I_{OH} . . . . . –5 mA
Input clamp current, I_{IK} ($V_I < 0$ or $V_I > V_{DD}$) . . . . . ±10 mA
Output clamp current, I_{OK} ($V_O < 0$ or $V_O > V_{DD}$) . . . . . ±10 mA
Continuous total power dissipation . . . . . See Dissipation Rating Table
Operating free-air temperature range, T_A . . . . . –40°C to 125°C
Storage temperature range, T_{stg} . . . . . –65°C to 150°C
Soldering temperature . . . . . 260°C

† Stresses beyond those listed under “absolute maximum ratings” may cause permanent damage to the device. These are stress ratings only, and functional operation of the device at these or any other conditions beyond those indicated under “recommended operating conditions” is not implied. Exposure to absolute-maximum-rated conditions for extended periods may affect device reliability.

NOTE 1: All voltage values are with respect to GND. For reliable operation, the device must not be operated at 7 V for more than t=1000 h continuously

DISSIPATION RATING TABLE

PACKAGE	T_A <25°C POWER RATING	DERATING FACTOR ABOVE T_A = 25°C	T_A = 70°C POWER RATING	T_A = 85°C POWER RATING	T_A = 125°C POWER RATING
DBV	437 mW	3.5 mW/ºC	280 mW	227 mW	87 mW

recommended operating conditions at specified temperature range

	MIN	MAX	UNIT
Supply voltage, V_{DD}	1.6	6	V
Input voltage, V_I	0	V_{DD} + 0.3	V
High-level input voltage, V_{IH}	$0.7 \times V_{DD}$		V
Low-level input voltage, V_{IL}		$0.3 \times V_{DD}$	V
Input transition rise and fall rate at $\overline{MR}$, $\Delta t/\Delta V$		100	ns/V
Operating free-air temperature range, T_A	–40	125	°C

查询"TPS3836E18-Q1"供应商

electrical characteristics over recommended operating conditions (unless otherwise noted)

PARAMETER			TEST CONDITION		MIN	TYP	MAX	UNIT
V_{OH}	High-level output voltage	$\overline{\text{RESET}}$ (TPS3836)	V_{DD} = 3.3 V,	I_{OH} = –2 mA	0.8 × V_{DD}			V
			V_{DD} = 6 V,	I_{OH} = –3 mA				
		RESET (TPS3837)	V_{DD} = 1.8 V,	I_{OH} = –1 mA				
			V_{DD} = 3.3 V,	I_{OL} = –2 mA				
V_{OL}	Low-level output voltage	$\overline{\text{RESET}}$ (TPS3836/8)	V_{DD} = 1.8 V,	I_{OL} = 1 mA			0.4	V
			V_{DD} = 3.3 V,	I_{OL} = 2 mA				
		RESET (TPS3837)	V_{DD} = 3.3 V,	I_{OL} = 2 mA				
			V_{DD} = 6 V,	I_{OL} = 3 mA				
	Power-up reset voltage (see Note 2)	TPS3836/8	$V_{DD} \geq$ 1.1 V,	I_{OL} = 50 µA			0.2	V
		TPS3837	$V_{DD} \geq$ 1.1 V,	I_{OH} = –50 µA	0.8 × V_{DD}			
V_{IT}	Negative-going input threshold voltage (see Note 3)	TPS383xE18			1.64	1.71	1.76	V
		TPS383xJ25			2.16	2.25	2.30	
		TPS383xH30			2.70	2.79	2.85	
		TPS383xL30			2.54	2.64	2.71	
		TPS383xK33			2.82	2.93	3.10	
V_{hys}	Hysteresis at V_{DD} input		1.7 V < V_{IT} < 2.5 V			30		mV
			2.5 V < V_{IT} < 3.5 V			40		
			3.5 V < V_{IT} < 5 V			50		
I_{IH}	High-level input current	$\overline{\text{MR}}$ (see Note 4)	$\overline{\text{MR}}$ = 0.7 × V_{DD},	V_{DD} = 6 V	–40	–60	–100	µA
		CT	CT = V_{DD} = 6 V		–25		25	nA
I_{IL}	Low-level input current	$\overline{\text{MR}}$ (see Note 4)	$\overline{\text{MR}}$ = 0 V,	V_{DD} = 6 V	–130	–200	–340	µA
		CT	CT = 0 V,	V_{DD} = 6 V	–25		25	nA
I_{OH}	High-level output current	TPS3838	V_{DD} = V_{IT} + 0.2 V,	V_{OH} = V_{DD}			25	nA
I_{DD}	Supply current		V_{DD} > V_{IT},	V_{DD} < 3 V		220	500	nA
			V_{DD} > V_{IT},	V_{DD} > 3 V		250	550	
			V_{DD} < V_{IT}			10	25	µA
	Internal pullup resistor at $\overline{\text{MR}}$					30		kΩ
C_I	Input capacitance at $\overline{\text{MR}}$, CT		V_I = 0 V to V_{DD}			5		pF

NOTES: 2. The lowest voltage at which $\overline{\text{RESET}}$ output becomes active. t_r, $V_{DD} \geq$ 15 µs/V
3. To ensure best stability of the threshold voltage, a bypass capacitor (ceramic, 0.1 µF) should be placed near the supply terminal.
4. If manual reset is unused, $\overline{\text{MR}}$ should be connected to V_{DD} to minimize current consumption.

查询"TPS3836H30-Q1"供应商

timing requirements at R_L = 1 MΩ, C_L = 50 pF, T_A = 25°C

PARAMETER			TEST CONDITIONS		MIN	TYP	MAX	UNIT
t_w	Pulse width	at V_{DD}	$V_{IH} = V_{IT} + 0.2$ V,	$V_{IL} = V_{IT} - 0.2$ V	6			µs
		at $\overline{MR}$	$V_{DD} \geq V_{IT} + 0.2$ V, $V_{IH} = 0.7 \times V_{DD}$	$V_{IL} = 0.3 \times V_{DD}$,	1			µs

switching characteristics at R_L = 1 MΩ, C_L = 50 pF, T_A = 25°C

PARAMETER			TEST CONDITIONS	MIN	TYP	MAX	UNIT
t_d	Delay time		$V_{DD} \geq V_{IT} + 0.2$ V, $\overline{MR} = 0.7 \times V_{DD}$, CT = GND, See timing diagram	5	10	15	ms
			$V_{DD} \geq V_{IT} + 0.2$ V, $\overline{MR} = 0.7 \times V_{DD}$, CT = V_{DD} , See timing diagram	100	200	300	
t_{PHL}	Propagation (delay) time, high-to-low-level output	V_{DD} to $\overline{RESET}$ delay (TPS3836, TPS3838)	$V_{IL} = V_{IT} - 0.2$ V, $V_{IH} = V_{IT} + 0.2$ V			10	µs
			V_{IL} = 1.6 V			50	
t_{PLH}	Propagation (delay) time, low-to-high-level output	V_{DD} to RESET delay (TPS3837)	$V_{IL} = V_{IT} - 0.2$ V, $V_{IH} = V_{IT} + 0.2$ V			10	µs
			V_{IL} = 1.6 V			50	
t_{PHL}	Propagation (delay) time, high-to-low-level output	$\overline{MR}$ to $\overline{RESET}$ delay (TPS3836, TPS3838)	$V_{DD} \geq V_{IT} + 0.2$ V, $V_{IL} = 0.3 \times V_{DD}$, $V_{IL} = 0.7 \times V_{DD}$			0.1	µs
t_{PLH}	Propagation (delay) time, low-to-high-level output	$\overline{MR}$ to RESET delay (TPS3837)				0.1	µs

TYPICAL CHARACTERISTICS

Table of Graphs

			FIGURE
I_{DD}	Supply current	vs Supply voltage	1
I_{MR}	Manual reset current	vs Manual reset voltage	2
V_{OL}	Low-level output voltage	vs Low-level output current	3
V_{OH}	High-level output voltage	vs High-level output current	4
	Normalized reset threshold voltage	vs Free-air temperature	5
	Minimum pulse duration at V_{DD}	vs V_{DD} Threshold overdrive	6

查询"TPS3836E18-Q1"供应商

TYPICAL CHARACTERISTICS

SUPPLY CURRENT vs SUPPLY VOLTAGE

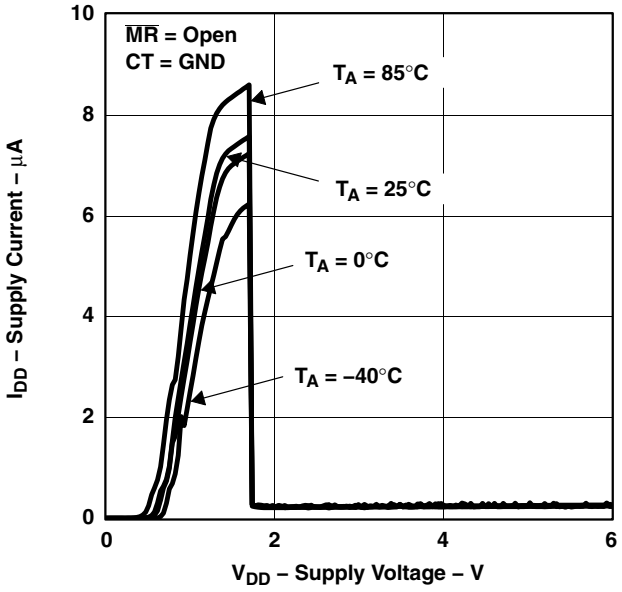

Figure 1

MANUAL RESET CURRENT vs MANUAL RESET VOLTAGE

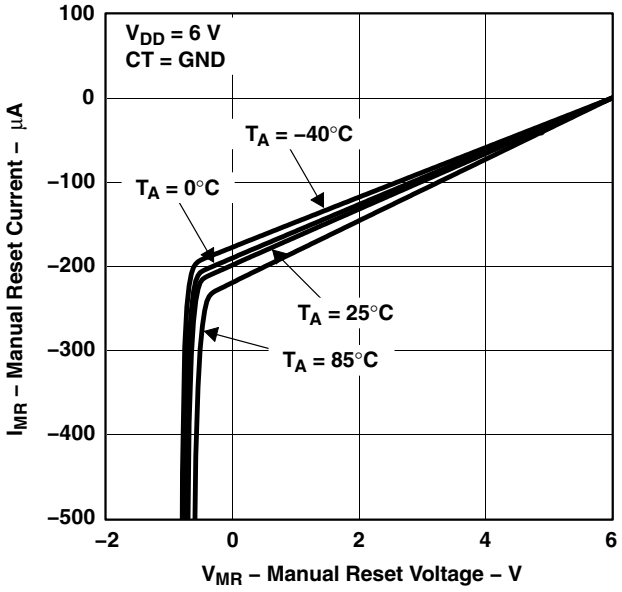

Figure 2

LOW-LEVEL OUTPUT VOLTAGE vs LOW-LEVEL OUTPUT CURRENT

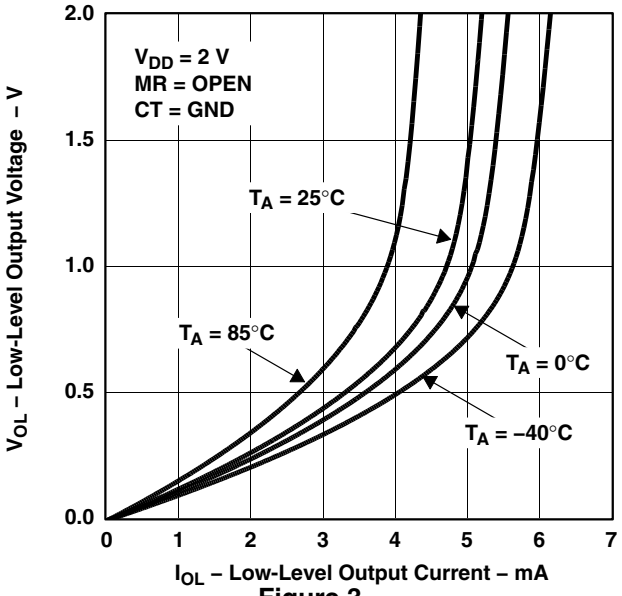

Figure 3

HIGH-LEVEL OUTPUT VOLTAGE vs HIGH-LEVEL OUTPUT CURRENT

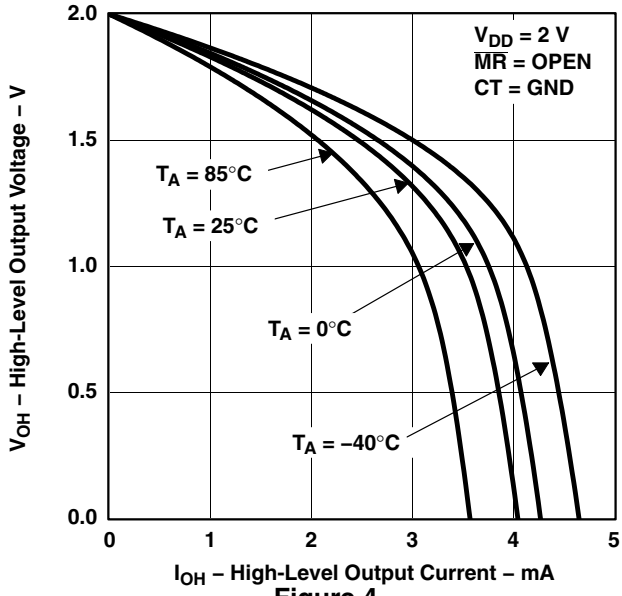

Figure 4

查询"TPS3836H30-Q1"供应商

TYPICAL CHARACTERISTICS

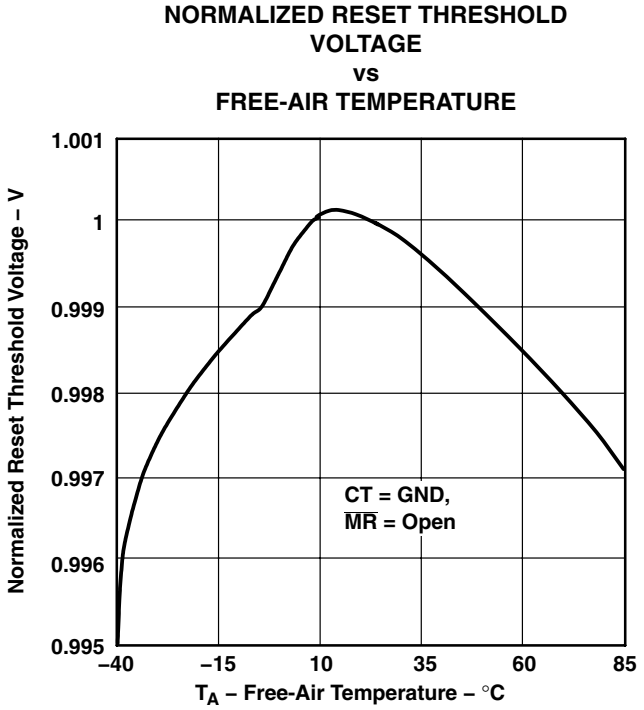

Figure 5

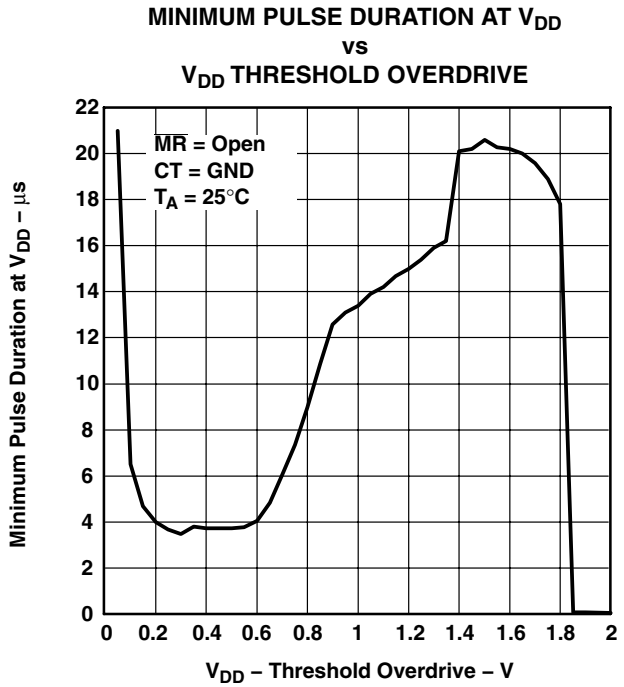

Figure 6

查询"TPS3836H30-Q1"供应商

www.ti.com

PACKAGING INFORMATION

Orderable Device	Status (1)	Package Type	Package Drawing	Pins	Package Qty	Eco Plan (2)	Lead/ Ball Finish	MSL Pea
2U3836E18QDBVRG4Q1	ACTIVE	SOT-23	DBV	5	3000	Green (RoHS & no Sb/Br)	CU NIPDAU	Level-1-260
2U3836H30QDBVRG4Q1	ACTIVE	SOT-23	DBV	5	3000	Green (RoHS & no Sb/Br)	CU NIPDAU	Level-1-260
2U3836J25QDBVRG4Q1	ACTIVE	SOT-23	DBV	5	3000	Green (RoHS & no Sb/Br)	CU NIPDAU	Level-1-260
2U3836K33QDBVRG4Q1	ACTIVE	SOT-23	DBV	5	3000	Green (RoHS & no Sb/Br)	CU NIPDAU	Level-1-260
2U3836L30QDBVRG4Q1	ACTIVE	SOT-23	DBV	5	3000	Green (RoHS & no Sb/Br)	CU NIPDAU	Level-1-260
2U3837E18QDBVRG4Q1	ACTIVE	SOT-23	DBV	5	3000	Green (RoHS & no Sb/Br)	CU NIPDAU	Level-1-260
2U3837J25QDBVRG4Q1	ACTIVE	SOT-23	DBV	5	3000	Green (RoHS & no Sb/Br)	CU NIPDAU	Level-1-260
2U3837K33QDBVRG4Q1	ACTIVE	SOT-23	DBV	5	3000	Green (RoHS & no Sb/Br)	CU NIPDAU	Level-1-260
2U3837L30QDBVRG4Q1	ACTIVE	SOT-23	DBV	5	3000	Green (RoHS & no Sb/Br)	CU NIPDAU	Level-1-260
2U3838E18QDBVRG4Q1	ACTIVE	SOT-23	DBV	5	3000	Green (RoHS & no Sb/Br)	CU NIPDAU	Level-1-260
2U3838J25QDBVRG4Q1	ACTIVE	SOT-23	DBV	5	3000	Green (RoHS & no Sb/Br)	CU NIPDAU	Level-1-260
2U3838K33QDBVRG4Q1	ACTIVE	SOT-23	DBV	5	3000	Green (RoHS & no Sb/Br)	CU NIPDAU	Level-1-260
2U3838L30QDBVRG4Q1	ACTIVE	SOT-23	DBV	5	3000	Green (RoHS & no Sb/Br)	CU NIPDAU	Level-1-260
TPS3836E18QDBVRQ1	ACTIVE	SOT-23	DBV	5	3000	Green (RoHS & no Sb/Br)	CU NIPDAU	Level-1-260
TPS3836H30QDBVRQ1	ACTIVE	SOT-23	DBV	5	3000	Green (RoHS & no Sb/Br)	CU NIPDAU	Level-1-260
TPS3836J25QDBVRQ1	ACTIVE	SOT-23	DBV	5	3000	Green (RoHS & no Sb/Br)	CU NIPDAU	Level-1-260
TPS3836K33QDBVRQ1	ACTIVE	SOT-23	DBV	5	3000	Green (RoHS & no Sb/Br)	CU NIPDAU	Level-1-260

查询"TPS3836H30-Q1"供应商

Orderable Device	Status (1)	Package Type	Package Drawing	Pins	Package Qty	Eco Plan (2)	Lead/ Ball Finish	MSL Pea
TPS3836L30QDBVRQ1	ACTIVE	SOT-23	DBV	5	3000	TBD	CU NIPDAU	Level-1-220
TPS3837E18QDBVRQ1	ACTIVE	SOT-23	DBV	5	3000	Green (RoHS & no Sb/Br)	CU NIPDAU	Level-1-260
TPS3837J25QDBVRQ1	ACTIVE	SOT-23	DBV	5	3000	Green (RoHS & no Sb/Br)	CU NIPDAU	Level-1-260
TPS3837K33QDBVRQ1	ACTIVE	SOT-23	DBV	5	3000	Green (RoHS & no Sb/Br)	CU NIPDAU	Level-1-260
TPS3837L30QDBVRQ1	ACTIVE	SOT-23	DBV	5	3000	Green (RoHS & no Sb/Br)	CU NIPDAU	Level-1-260
TPS3838E18QDBVRQ1	ACTIVE	SOT-23	DBV	5	3000	Green (RoHS & no Sb/Br)	CU NIPDAU	Level-1-260
TPS3838J25QDBVRQ1	ACTIVE	SOT-23	DBV	5	3000	Green (RoHS & no Sb/Br)	CU NIPDAU	Level-1-260
TPS3838K33QDBVRQ1	ACTIVE	SOT-23	DBV	5	3000	Green (RoHS & no Sb/Br)	CU NIPDAU	Level-1-260
TPS3838L30QDBVRQ1	ACTIVE	SOT-23	DBV	5	3000	TBD	CU NIPDAU	Level-1-220

(1) The marketing status values are defined as follows:
ACTIVE: Product device recommended for new designs.
LIFEBUY: TI has announced that the device will be discontinued, and a lifetime-buy period is in effect.
NRND: Not recommended for new designs. Device is in production to support existing customers, but TI does not recommend using this part in a new
PREVIEW: Device has been announced but is not in production. Samples may or may not be available.
OBSOLETE: TI has discontinued the production of the device.

(2) Eco Plan - The planned eco-friendly classification: Pb-Free (RoHS), Pb-Free (RoHS Exempt), or Green (RoHS & no Sb/Br) - please check http://www.
information and additional product content details.
TBD: The Pb-Free/Green conversion plan has not been defined.
Pb-Free (RoHS): TI's terms "Lead-Free" or "Pb-Free" mean semiconductor products that are compatible with the current RoHS requirements for all
lead not exceed 0.1% by weight in homogeneous materials. Where designed to be soldered at high temperatures, TI Pb-Free products are suitable fo
Pb-Free (RoHS Exempt): This component has a RoHS exemption for either 1) lead-based flip-chip solder bumps used between the die and package,
the die and leadframe. The component is otherwise considered Pb-Free (RoHS compatible) as defined above.
Green (RoHS & no Sb/Br): TI defines "Green" to mean Pb-Free (RoHS compatible), and free of Bromine (Br) and Antimony (Sb) based flame retard
in homogeneous material)

(3) MSL, Peak Temp. -- The Moisture Sensitivity Level rating according to the JEDEC industry standard classifications, and peak solder temperature.

Important Information and Disclaimer: The information provided on this page represents TI's knowledge and belief as of the date that it is provided. TI
provided by third parties, and makes no representation or warranty as to the accuracy of such information. Efforts are underway to better integrate inf

查询"TPS3836H30-Q1"供应商

continues to take reasonable steps to provide representative and accurate information but may not have conducted destructive testing or chemical ar
TI and TI suppliers consider certain information to be proprietary, and thus CAS numbers and other limited information may not be available for releas

In no event shall TI's liability arising out of such information exceed the total purchase price of the TI part(s) at issue in this document sold by TI to Cu

OTHER QUALIFIED VERSIONS OF TPS3836E18-Q1, TPS3836H30-Q1, TPS3836J25-Q1, TPS3836K33-Q1, TPS3836L30-Q1, TPS3837E18-Q1, TPS3837K33-Q1, TPS3837L30-Q1, TPS3838E18-Q1, TPS3838J25-Q1, TPS3838K33-Q1, TPS3838L30-Q1 :

- Catalog: TPS3836E18, TPS3836H30, TPS3836J25, TPS3836K33, TPS3836L30, TPS3837E18, TPS3837J25, TPS3837K33, TPS3837L3 TPS3838J25, TPS3838K33, TPS3838L30
- Enhanced Product: TPS3836J25-EP, TPS3836L30-EP, TPS3837K33-EP

NOTE: Qualified Version Definitions:

- Catalog - TI's standard catalog product
- Enhanced Product - Supports Defense, Aerospace and Medical Applications

查询"TPS3836H30-Q1"供应商

DBV (R–PDSO–G5) PLASTIC SMALL–OUTLINE PACKAGE

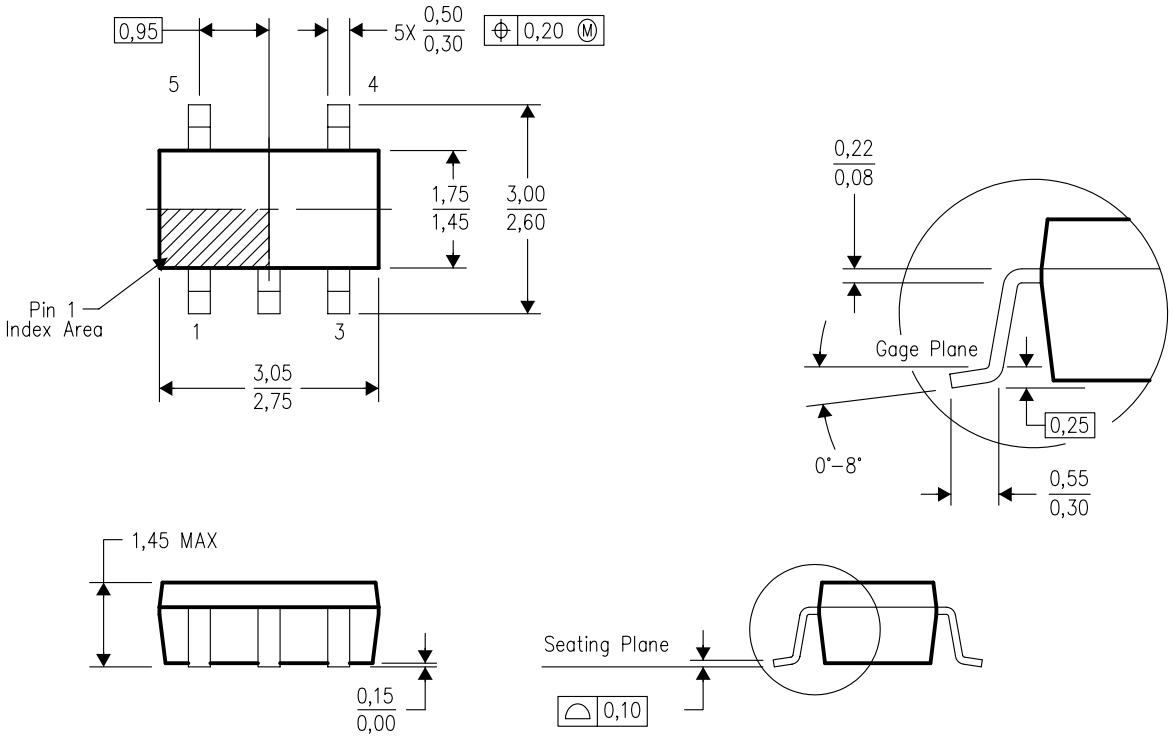

4073253–4/K 03/2006

NOTES:
A. All linear dimensions are in millimeters.
B. This drawing is subject to change without notice.
C. Body dimensions do not include mold flash or protrusion. Mold flash and protrusion shall not exceed 0.15 per side.
D. Falls within JEDEC MO–178 Variation AA.

查询"TPS3836H30-Q1"供应商

IMPORTANT NOTICE

Texas Instruments Incorporated and its subsidiaries (TI) reserve the right to make corrections, modifications, enhancements, improvements, and other changes to its products and services at any time and to discontinue any product or service without notice. Customers should obtain the latest relevant information before placing orders and should verify that such information is current and complete. All products are sold subject to TI's terms and conditions of sale supplied at the time of order acknowledgment.

TI warrants performance of its hardware products to the specifications applicable at the time of sale in accordance with TI's standard warranty. Testing and other quality control techniques are used to the extent TI deems necessary to support this warranty. Except where mandated by government requirements, testing of all parameters of each product is not necessarily performed.

TI assumes no liability for applications assistance or customer product design. Customers are responsible for their products and applications using TI components. To minimize the risks associated with customer products and applications, customers should provide adequate design and operating safeguards.

TI does not warrant or represent that any license, either express or implied, is granted under any TI patent right, copyright, mask work right, or other TI intellectual property right relating to any combination, machine, or process in which TI products or services are used. Information published by TI regarding third-party products or services does not constitute a license from TI to use such products or services or a warranty or endorsement thereof. Use of such information may require a license from a third party under the patents or other intellectual property of the third party, or a license from TI under the patents or other intellectual property of TI.

Reproduction of TI information in TI data books or data sheets is permissible only if reproduction is without alteration and is accompanied by all associated warranties, conditions, limitations, and notices. Reproduction of this information with alteration is an unfair and deceptive business practice. TI is not responsible or liable for such altered documentation. Information of third parties may be subject to additional restrictions.

Resale of TI products or services with statements different from or beyond the parameters stated by TI for that product or service voids all express and any implied warranties for the associated TI product or service and is an unfair and deceptive business practice. TI is not responsible or liable for any such statements.

TI products are not authorized for use in safety-critical applications (such as life support) where a failure of the TI product would reasonably be expected to cause severe personal injury or death, unless officers of the parties have executed an agreement specifically governing such use. Buyers represent that they have all necessary expertise in the safety and regulatory ramifications of their applications, and acknowledge and agree that they are solely responsible for all legal, regulatory and safety-related requirements concerning their products and any use of TI products in such safety-critical applications, notwithstanding any applications-related information or support that may be provided by TI. Further, Buyers must fully indemnify TI and its representatives against any damages arising out of the use of TI products in such safety-critical applications.

TI products are neither designed nor intended for use in military/aerospace applications or environments unless the TI products are specifically designated by TI as military-grade or "enhanced plastic." Only products designated by TI as military-grade meet military specifications. Buyers acknowledge and agree that any such use of TI products which TI has not designated as military-grade is solely at the Buyer's risk, and that they are solely responsible for compliance with all legal and regulatory requirements in connection with such use.

TI products are neither designed nor intended for use in automotive applications or environments unless the specific TI products are designated by TI as compliant with ISO/TS 16949 requirements. Buyers acknowledge and agree that, if they use any non-designated products in automotive applications, TI will not be responsible for any failure to meet such requirements.

Following are URLs where you can obtain information on other Texas Instruments products and application solutions:

Products		**Applications**	
Amplifiers	amplifier.ti.com	Audio	www.ti.com/audio
Data Converters	dataconverter.ti.com	Automotive	www.ti.com/automotive
DLP® Products	www.dlp.com	Communications and Telecom	www.ti.com/communications
DSP	dsp.ti.com	Computers and Peripherals	www.ti.com/computers
Clocks and Timers	www.ti.com/clocks	Consumer Electronics	www.ti.com/consumer-apps
Interface	interface.ti.com	Energy	www.ti.com/energy
Logic	logic.ti.com	Industrial	www.ti.com/industrial
Power Mgmt	power.ti.com	Medical	www.ti.com/medical
Microcontrollers	microcontroller.ti.com	Security	www.ti.com/security
RFID	www.ti-rfid.com	Space, Avionics & Defense	www.ti.com/space-avionics-defense
RF/IF and ZigBee® Solutions	www.ti.com/lprf	Video and Imaging	www.ti.com/video
		Wireless	www.ti.com/wireless-apps

Mailing Address: Texas Instruments, Post Office Box 655303, Dallas, Texas 75265
Copyright © 2010, Texas Instruments Incorporated