查询"SGM3167"供应商

SGM3167

600MHz Low Voltage SPDT Analog Switch in 6-pin SC70

GENERAL DESCRIPTION

The SGM3167 is a single, bidirectional, single-pole/double-throw (SPDT) CMOS analog switches designed to operate from a single +1.8V to +5.5V supply. It features high-bandwidth (600MHz) and low ON-resistance (9Ω typ), Targeted applications for audio switching.

SGM3167 features guaranteed on-resistance matching (0.3Ω max) between switches and guaranteed on-resistance flatness over the signal range (2.5Ω TYP). This ensures excellent linearity and low distortion when switching audio signals.

SGM3167 is available in a SC70-6 package.

FEATURES

- **Voltage Operation : 1. 8 V to 5. 5 V**
- **On-Resistance: 9Ω (typ) at 5.0V**
- **Fast Switching Time**
  - **t_{ON} 20 ns**
  - **t_{OFF} 15 ns**
- **High Bandwidth: 600 MHz**
- **High Off-Isolation: 63dB at 10MHz**
- **Rail-to-Rail Operation**
- **TTL/CMOS Compatible**
- **Break-Before-Make Switching**
- **Extended Industrial Temperature Range: –40°C to 85°C**
- **Lead (Pb) Free SC70-6 Package**

PIN CONFIGURATIONS（TOP VIEW）

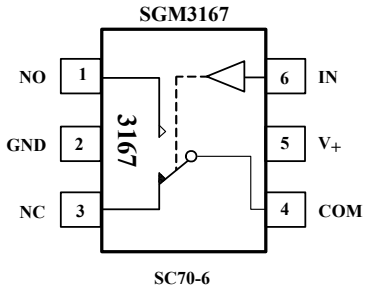

APPLICATIONS

Portable Instrumentation
Battery-Operated Equipment
Computer Peripherals
Cell Phones
PDAs
MP3s

FUNCTION TABLE

LOGIC	NO	NC
0	OFF	ON
1	ON	OFF

Switches Shown For Logic "0" Input

PIN DESCRIPTION

NAME	PIN	FUNCTION
NO	1	Normally-open terminal
GND	2	ground
NC	3	Normally-closed terminal
COM	4	Common terminal
V_+	5	Power supply
IN	6	Digital control pin to connect the COM terminal to the NO or NC terminals

Note: NO, NC and COM terminal may be an input or output.

查询"SGM3167"供应商

ELECTRICAL CHARACTERISTICS

(V_+ = +2.7V to +3.6V, V_{IH} = +1.4 V, V_{IL} = +0.5V, T_A = - 40°C to +85°C, Typical values are at V_+ = 3.0V, T_A = + 25°C, unless otherwise noted.)

PARAMETER	SYMBOL	CONDITIONS		TEMP	MIN	TPY	MAX	UNITS
ANALOG SWITCH								
Analog Signal Range	V_{NO}, V_{NC}, V_{COM}			- 40°C to +85°C	0		V_+	V
On-Resistance	R_{ON}	V_+ = 2.7V, V_{NO} or V_{NC} = 1.5V, I_{COM} = -10 mA, Test Circuit 1		+25°C		14	25	Ω
				- 40°C to +85°C			28	Ω
On-Resistance Match Between Channels	ΔR_{ON}	V_+ = 2.7V, V_{NO} or V_{NC} = 1.5V, I_{COM} = -10 mA, Test Circuit 1		+25°C		0.3	0.6	Ω
				- 40°C to +85°C			0.8	Ω
On-Resistance Flatness	$R_{FLAT(ON)}$	V_+ = 2.7V, V_{NO} or V_{NC} = 1.0V, 1.5V, 2.0V, I_{COM} = -10 mA, Test Circuit 1		+25°C		2.5	8	Ω
				- 40°C to +85°C			10	Ω
Source OFF Leakage current	$I_{NC(OFF)}$, $I_{NO(OFF)}$	V_+ = 3.6V, V_{NO} or V_{NC} = 0.3V, 3.3V, V_{COM} = 0.3V, 3.3V,		- 40°C to +85°C			1	µA
Channel ON Leakage current	$I_{NC(ON)}$, $I_{NO(ON)}$, $I_{COM(ON)}$	V_+ = 3.6V, V_{COM} = 0.3V, 3.3V, V_{NO} or V_{NC} = 0.3V, 3.3V, or floating		- 40°C to +85°C			1	µA
DIGITAL INPUTS								
Input High Voltage	V_{INH}			- 40°C to +85°C	1			V
Input Low Voltage	V_{INL}			- 40°C to +85°C			0.5	V
Input Leakage Current	I_{IN}	V_+ = +3.6V, V_{IN} = 0 or 5.5V		- 40°C to +85°C			1	µA
DYNAMIC CHARACTERISTICS								
Turn-On Time	t_{ON}	V_{NO} or V_{NC} = 1.5V, R_L = 300Ω, C_L = 35pF, Test Circuit 2; V_{IH} = 1.5V, V_{IL} = 0V		+25°C		30		ns
Turn-Off Time	t_{OFF}	V_{NO} or V_{NC} = 1.5V, R_L = 300Ω, C_L = 35pF, Test Circuit 2; V_{IH} = 1.5V, V_{IL} = 0V		+25°C		25		ns
Break-Before-Make Time Delay	t_D	V_{NO1} or V_{NC1} = V_{NO2} or V_{NC2} = 3V, R_L = 300Ω, C_L = 35pF, Test Circuit 3		+25°C		8		ns
Skew	t_{SKEW}	RS = 39Ω, C_L = 50pF, Test Circuit 4		+25°C		2		ns
Off Isolation	O_{ISO}	R_L = 50Ω, C_L = 5pF, V_{NO} or V_{NC} = 1V_{P-P} Test Circuit 5	f = 10MHz	+25°C		-63		dB
			f = 1MHz	+25°C		-83		dB
Bandwidth –3 dB	BW	Signal = 0dBm, R_L = 50Ω, C_L = 5pF, Test Circuit 6		+25°C		600		MHz
Source OFF Capacitance	$C_{NC(OFF)}$, $C_{NO(OFF)}$	f = 1MHz		+25°C		5.5		pF
Channel ON Capacitance	$C_{NC(ON)}$, $C_{NO(ON)}$, $C_{COM(ON)}$	f = 1MHz		+25°C		9		pF
POWER REQUIREMENTS								
Power Supply Range	V_+			- 40°C to +85°C	1.8		5.5	V
Power Supply Current	I_+	V_+ = +5.5V, V_{IN} = 0V or V_+		- 40°C to +85°C			5	µA

Specifications subject to change without notice.

查询"SGM3167"供应商

ELECTRICAL CHARACTERISTICS

(V_+ = +4.5V to +5.5V, V_{IH} = +2.0 V, V_{IL} = +0.8V, T_A = - 40°C to +85°C, Typical values are at V_+ = 5.0V, T_A = + 25°C, unless otherwise noted.)

PARAMETER	SYMBOL	CONDITIONS	TEMP	MIN	TPY	MAX	UNITS
ANALOG SWITCH							
Analog Signal Range	V_{NO}, V_{NC}, V_{COM}		- 40°C to +85°C	0		V_+	V
On-Resistance	R_{ON}	V_+ = 4.5V, V_{NO} or V_{NC} = 3.5V, I_{COM} = -10 mA, Test Circuit 1	+25°C		9	14	Ω
			- 40°C to +85°C			16	Ω
On-Resistance Match Between Channels	ΔR_{ON}	V_+ = 4.5V, V_{NO} or V_{NC} = 3.5V, I_{COM} = -10 mA, Test Circuit 1	+25°C		0.3	0.6	Ω
			- 40°C to +85°C			0.8	Ω
On-Resistance Flatness	$R_{FLAT(ON)}$	V_+ = 4.5V, V_{NO} or V_{NC} = 1.0V, 2.0V, 3.5V, I_{COM} = -10 mA, Test Circuit 1	+25°C		2	2.6	Ω
			- 40°C to +85°C			3	Ω
Source OFF Leakage current	$I_{NC(OFF)}$, $I_{NO(OFF)}$	V_+ = 5.5V, V_{NO} or V_{NC} = 1.0V, 4.5V, V_{COM} = 1.0V, 4.5V,	- 40°C to +85°C			1	μA
Channel ON Leakage current	$I_{NC(ON)}$, $I_{NO(ON)}$, $I_{COM(ON)}$	V_+ = 5.5V, V_{COM} = 1.0V, 4.5V, V_{NO} or V_{NC} = 1.0V, 4.5V, or floating	- 40°C to +85°C			1	μA
DIGITAL INPUTS							
Input High Voltage	V_{INH}		- 40°C to +85°C	1.5			V
Input Low Voltage	V_{INL}		- 40°C to +85°C			0.6	V
Input Leakage Current	I_{IN}	V_+ = +5.5V, V_{IN} = 0 or 5.5V	- 40°C to +85°C			1	μA
DYNAMIC CHARACTERISTICS							
Turn-On Time	t_{ON}	V_{NO} or V_{NC} = 3.0V, R_L = 300Ω, C_L = 35pF, Test Circuit 2; V_{IH} = 1.5V, V_{IL} = 0V	+25°C		20		ns
Turn-Off Time	t_{OFF}	V_{NO} or V_{NC} = 3.0V, R_L = 300Ω, C_L = 35pF, Test Circuit 2; V_{IH} = 1.5V, V_{IL} = 0V	+25°C		15		ns
Break-Before-Make Time Delay	t_D	V_{NO1} or V_{NC1} = V_{NO2} or V_{NC2} = 3V, R_L = 300Ω, C_L = 35pF, Test Circuit 3	+25°C		5		ns
Skew	t_{SKEW}	RS = 39Ω, C_L = 50pF, Test Circuit 4	+25°C		5		ns
Off Isolation	O_{ISO}	R_L = 50Ω, C_L = 5pF, V_{NO} or V_{NC} = 1V_{P-P} Test Circuit 5, f = 10MHz	+25°C		-63		dB
		f = 1MHz	+25°C		-83		dB
Bandwidth –3 dB	BW	Signal = 0dBm, R_L = 50Ω, C_L = 5pF, Test Circuit 6	+25°C		600		MHz
Source OFF Capacitance	$C_{NC(OFF)}$, $C_{NO(OFF)}$	f = 1MHz	+25°C		5.5		pF
Channel ON Capacitance	$C_{NC(ON)}$, $C_{NO(ON)}$, $C_{COM(ON)}$	f = 1MHz	+25°C		9		pF
POWER REQUIREMENTS							
Power Supply Range	V_+		- 40°C to +85°C	1.8		5.5	V
Power Supply Current	I_+	V_+ = +5.5V, V_{IN} = 0V or V_+	- 40°C to +85°C			5	μA

Specifications subject to change without notice.

查询"SGM3167"供应商

ORDERING INFORMATION

MODEL	PIN-PACKAGE	SPECIFIED TEMPERATURE RANGE	ORDERING NUMBER	PACKAGE MARKING	PACKAGE OPTION
SGM3167	SC70-6	- 40°C to +85°C	SGM3167YC6/TR	3167	Tape and Reel, 3000

ABSOLUTE MAXIMUM RATINGS

V_+ , IN to GND.....- 0.3V to +6V
Analog, Digital voltage range(1)..... - 0.3V to (V_+ + 0.3V)
Continuous Current NO, NC, or COM.....±120mA
Peak Current NO, NC, or COM.....±250mA
Operating Temperature Range.....- 40°C to +85°C
Junction Temperature.....+150°C
Storage Temperature.....- 65°C to +150°C
Lead Temperature (soldering, 10s).....+260°C
ESD（HBM）.....2000V

Stresses beyond those listed under "Absolute Maximum Ratings" may cause permanent damage to the device. These are stress ratings only, and functional operation of the device at these or any other conditions beyond those indicated in the operational sections of the specifications is not implied. Exposure to absolute maximum rating conditions for extended periods may affect device reliability.
(1) Signals on NC, NO, or COM or IN exceeding V+ will be clamped by internal diodes. Limit forward diode current to maximum current ratings.

查询"SGM3167"供应商

TYPICAL PERFORMANCE CHARACTERISTICS

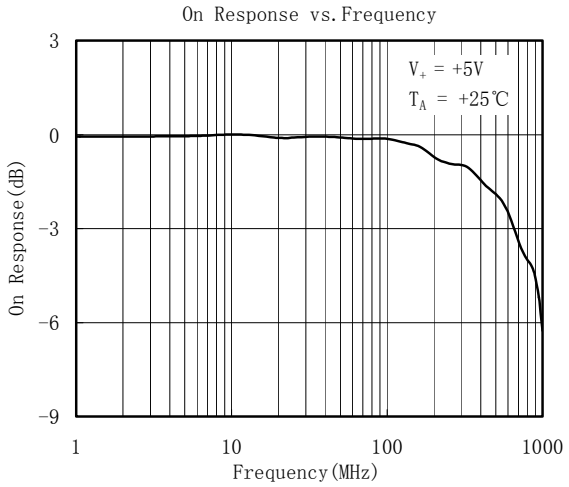

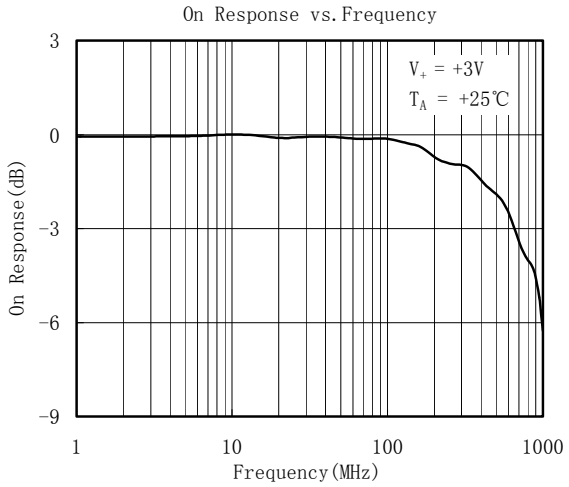

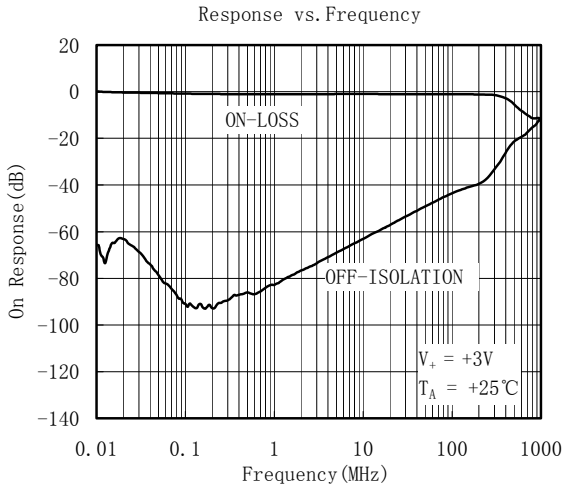

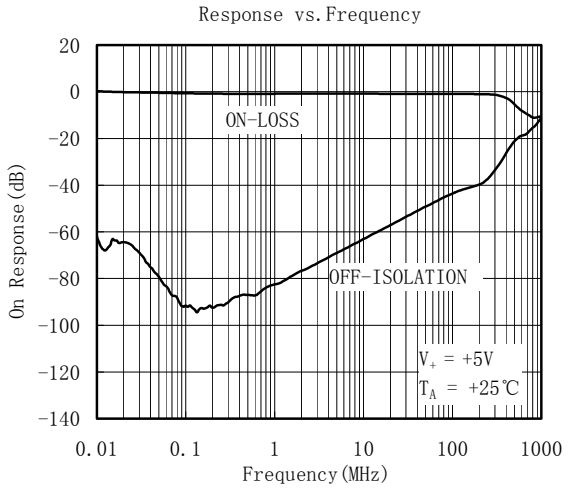

查询"SGM3167"供应商

TEST CIRCUITS

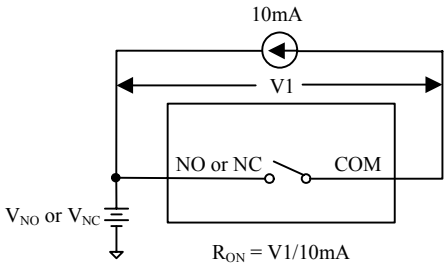

Test Circuit 1. On Resistance

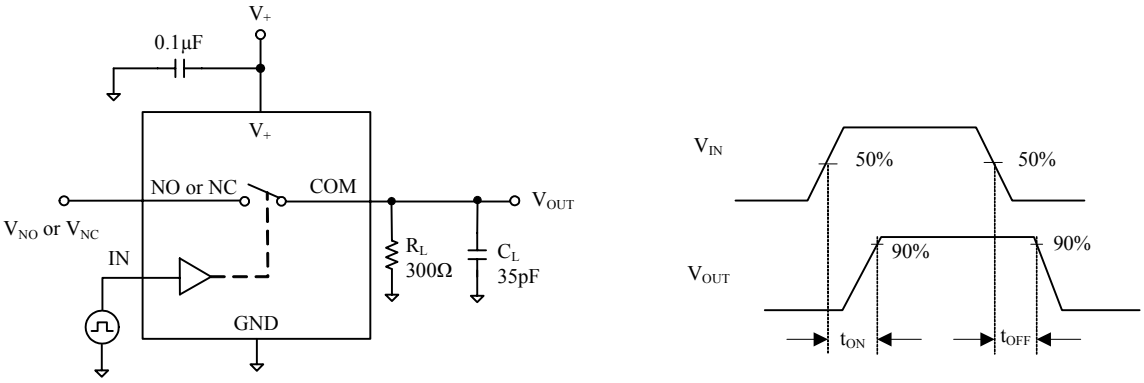

Test Circuit 2. Switching Times

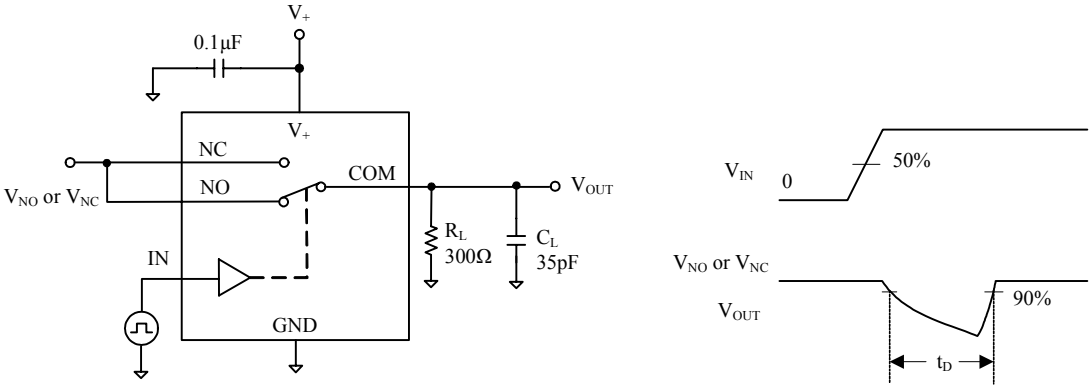

Test Circuit 3. Break-Before-Make Time Delay, t_D

查询"SGM3167"供应商

TEST CIRCUITS (Cont.)

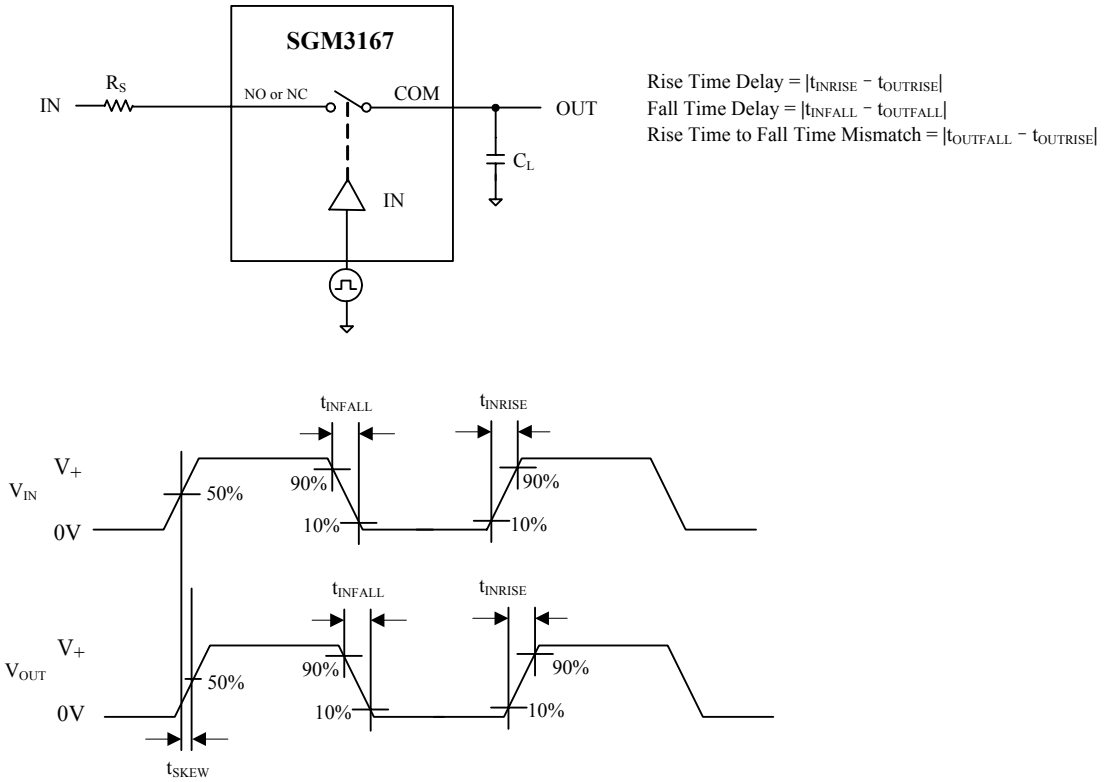

Test Circuit 4. Output Signal Skew

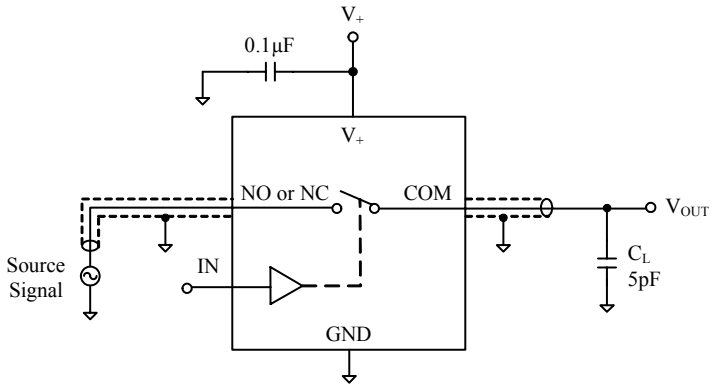

Test Circuit 5. Off Isolation

查询"SGM3167"供应商

TEST CIRCUITS (Cont.)

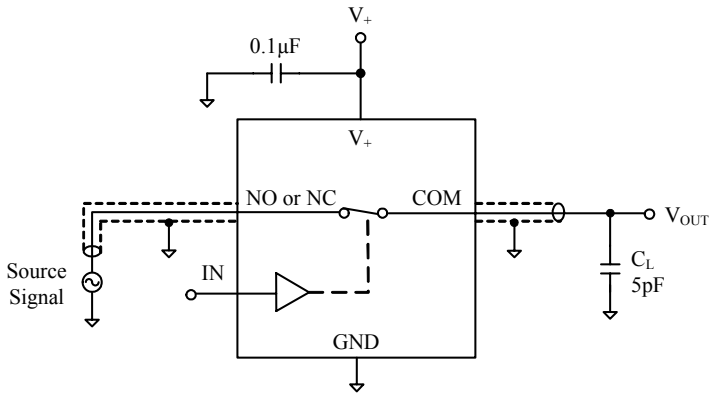

Test Circuit 6. Bandwidth

查询"SGM3167"供应商

PACKAGE OUTLINE DIMENSIONS

SC70-6

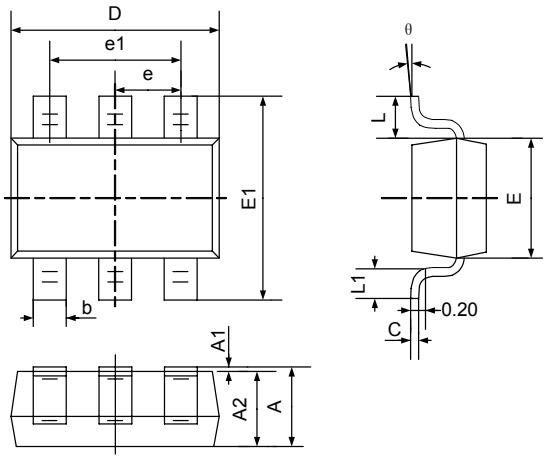

Symbol	Dimensions In Millimeters		Dimensions In Inches	
	Min	Max	Min	Max
A	0.900	1.100	0.035	0.043
A1	0.000	0.100	0.000	0.004
A2	0.900	1.000	0.035	0.039
b	0.150	0.350	0.006	0.014
c	0.080	0.150	0.003	0.006
D	2.000	2.200	0.079	0.087
E	1.150	1.350	0.045	0.053
E1	2.150	2.450	0.085	0.096
e	0.650TYP		0.026TYP	
e1	1.200	1.400	0.047	0.055
L	0.525REF		0.021REF	
L1	0.260	0.460	0.010	0.018
θ	0°	8°	0°	8°

查询"SGM3167"供应商

REVISION HISTORY

Location **Page**

08/07— Data Sheet REV.A

10/07— Data Sheet changed from REV.A to REV.B

Changes to TYPICAL PERFORMANCE CHARACTERISTICS 5

Shengbang Microelectronics Co, Ltd

Unit 3, ChuangYe Plaza
No.5, TaiHu Northern Street, YingBin Road Centralized Industrial Park
Harbin Development Zone
Harbin, HeiLongJiang 150078
P.R. China
Tel.: 86-451-84348461
Fax: 86-451-84308461
www.sg-micro.com