查询"DAC-HF8BMM"供应商

DAC-HF Series

Ultra-Fast, 8/10/12-Bit Digital-to-Analog Converters

FEATURES

- 8, 10 and 12-Bit resolutions
- Settling times to 25ns
- ±20ppm/°C max. gain tempco
- Unipolar or bipolar operation
- Current output
- Internal feedback resistors
- High-reliability MIL-STD-883 models

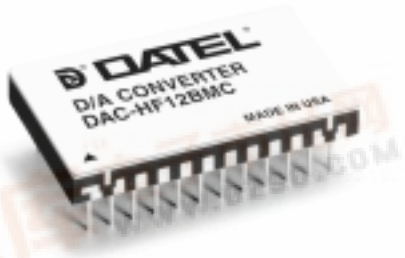

GENERAL DESCRIPTION

The DAC-HF Series of hybrid DAC's are ultra high-speed, current output devices. They incorporate state-of-the-art performance in a miniature package, achieving maximum output settling times of 25ns for the 8 and 10-bit models and 50ns for the 12-bit model. They can be used to drive a resistor load directly for up to ±1V output or a fast operational ampifier (such as DATEL's AM-500) for higher voltage outputs with sub-microsecond settling times. A tapped feedback resistor and a bipolar offset resistor are included internally to give five programmable output voltage ranges with an external operational amplifier.

The DAC-HF design combines proven hybrid construction techniques with advanced circuit design to realize high-speed current switching. The design incorporates fast PNP current switches driving a low-impedance R-2R thin-film ladder network. The nichrome thin-film resistor network is deposited by electron beam evaporation on a low-capacitance substrate to assure high-speed performance. The resistors are then functionally trimmed by laser for optimum linearity.

INPUT/OUTPUT CONNECTIONS, DAC-HF12B

PIN	FUNCTION	PIN	FUNCTION
1	BIT 1 (MSB)	24	+15V SUPPLY
2	BIT 2	23	GROUND
3	BIT 3	22	–15V SUPPLY
4	BIT 4	21	REFERENCE OUT
5	BIT 5	20	BIPOLAR OFFSET
6	BIT 6	19	10V RANGE
7	BIT 7	18	OUTPUT
8	BIT 8	17	20V RANGE
9	BIT 9 *	16	REFERENCE IN
10	BIT 10 *	15	GROUND
11	BIT 11 *	14	GROUND
12	BIT 12 (LSB) *	13	GROUND

* See note in Figure 1

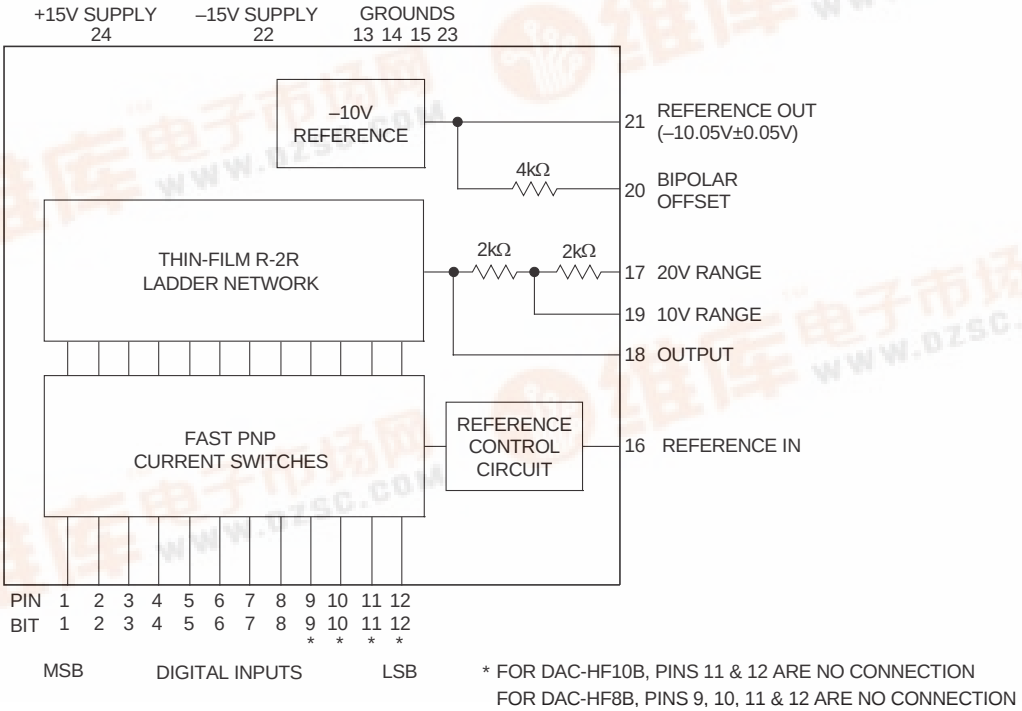

* FOR DAC-HF10B, PINS 11 & 12 ARE NO CONNECTION
FOR DAC-HF8B, PINS 9, 10, 11 & 12 ARE NO CONNECTION

Figure 1. Functional Block Diagram

找PDF 维库一下 pdf.dzsc.com

查询"DAC-HF8BMM"供应商

ABSOLUTE MAXIMUM RATINGS, ALL MODELS

Positive Supply, Pin 24	+18V
Negative Supply, Pin 22	–18V
Digital Input Voltage, Pins 1–12	+15V
Lead Temperature (soldering, 10s)	300°C

FUNCTIONAL SPECIFICATIONS

(Typical at +25°C and ±15V supplies unless otherwise noted.)

DESCRIPTION	8B	10B	12B
INPUTS			
Resolution, Bits	8	10	12
Coding, Unipolar Output	Straight binary		
Coding, Bipolar Output	Offset binary		
Input Logic Level, Bit ON ("1")	+2.0V to +5.5V at +40µA		
Input Logic Level, Bit OFF ("0")	0V to +0.8V at –2.6mA		
PERFORMANCE			
Nonlinearity Error, max.	±0.012%		
T_{MIN} to T_{MAX}	±0.024%		
Differential Nonlinearity Error, max.	±0.012%		
T_{MIN} to T_{MAX}	±0.024%		
Monotonicity	Guaranteed over oper. temp. range		
Gain Tempco, max.	±20ppm/°C		
Offset Tempco, Bipolar, max.	±10ppm/°C of FSR ②		
Zero Tempco, max.	±1.5ppm/°C of FSR ②		
Settling Time, ns max. ③	25	25	50
Power Supply Sensitivity	±0.01%/% Supply		
OUTPUTS			
Output Current Range, Unipolar	0 to +5mA		
Output Current Range, Bipolar	±2.5mA		
Output Compliance Voltage	±1.2V		
Output Voltage Ranges ①	0 to –5V 0 to –10V ±2.5V ±5V ±10V		
Output Resistance	400 Ohms ±10%		
Output Capacitance	15pF		
Output Leakage Current, All Bits OFF	15nA		
POWER REQUIREMENTS			
Supply Voltages	±15V ±0.5V		
Positive Quiescent Current, max.	40mA	45mA	50mA
Negative Quiescent Current, max.	17mA	17mA	17mA
PHYSICAL ENVIRONMENTAL			
Operating Temperature Range, Case	0°C to +70°C (BMC) –55°C to +125°C (BMM, 883)		
Storage Temperature Range	–65°C to +150°C		
Package Type	24-pin ceramic DDIP		
Weight	0.22 ounces (6.3 grams)		

Footnotes

① With external operational amplifier.

② FSR is Full Scale Range, or the difference between minimum and maximum output values.

③ Full-scale current change to ±1LSB with 400Ω load.

TECHNICAL NOTES

1. Proper operation of the DAC-HF Series converters is dependent on good board layout and connection practices. Bypass supplies as shown in the connection diagrams. Mount bypass capacitors close to the converter, directly to the supply pins where possible.

2. Use of a ground plane is particularly important in high-speed D/A converters as it reduces high-frequency noise and aids in decoupling the digital inputs from the analog output. Avoid ground loop problems by connecting all grounds on the board to the ground plane. The remainder of the ground plane should include as much of the circuit board as possible.

3. When the converter is configured for voltage output with an external operational amplifier, keep the leads from the converter to the output amplifier as short as possible.

4. The high-speed current switching technique used in the DAC-HF Series inherently reduces the amplitude and duration of large transient spikes at the output ("glitches"). The most severe glitches occur at half-scale, the major carry transition from 011 … 1 to 100 … 0 or vice versa. At this time, a skewing of the input codes can create a transition state code of 111 … 1. The duration of the "transition state code" is dependent on the degree of skewing, but its effect is dependent on the speed of the DAC (an ultra-fast DAC will respond to these brief spurious inputs to a greater degree than a slow DAC).

   Minimize the effects of input skewing by using a high-speed input register to match input switching times. The input register recommended for use with the DAC-HF is easily implemented with two Texas Instruments SN74S174 hex D-type flip-flops. This register will reduce glitches to a very low level and ensure fast output settling times.

5. Test the DAC-HF using a low-capacitance test probe (such as a 10X probe). Take care to assure the shortest possible connection between probe ground and circuit ground. Long probe ground leads may pick up environmental E.M.I. causing artifacts on the scope display, i.e., signals that do not originate at the unit under test.

6. Passive components used with the DAC-HF may be as indicated here: 0.1µF and 1µF bypass capacitors should be ceramic type and tantalum type respectively; the 400Ω output load is a ±0.1%, 10ppm/°C, metal-film type; adjustment potentiometers are ceremet types; other resistors may be ±10% carbon composition types.

7. Output voltage compliance is ±1.2V to preserve the linearity of the converter. In the bipolar mode, the DAC-HF can be operated with no load to give an output voltage of ±1.0V. In the unipolar mode, the load resistance must be less than 600Ω to give less than +1.2V output. The specified output currents of 0 to +5mA and ±2.5mA are measured into a short circuit or an operational amplifier summing junction.

查询"DAC-HF8BMM"供应商

CALIBRATION PROCEDURE

Unipolar Output Current

1. Connect the converter as shown in Figure 2.
2. Set all inputs low and adjust the ZERO ADJUST potentiometer for a reading of 0V at the output.
3. Set all inputs high and adjust the GAIN ADJUST potentiometer for a reading of –F.S. + 1LSB (See Table 1).

Bipolar Output Current

1. Connect the converter as shown in Figure 3.
2. Set all inputs low and adjust the OFFSET ADJUST and LOAD potentiometer for an output reading of +F.S. (See Table 2).
3. Set all inputs high and adjust the GAIN ADJUST potentiometer for an output reading of –F.S. + 1LSB (See Table 2).

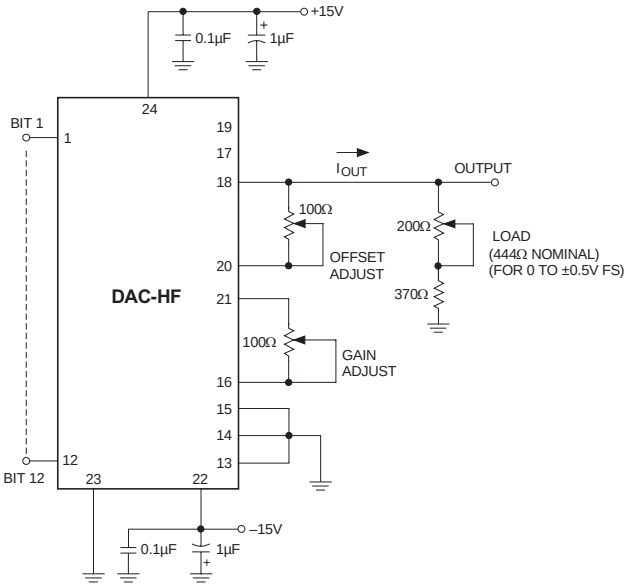

Figure 3. Bipolar Current Output Connections

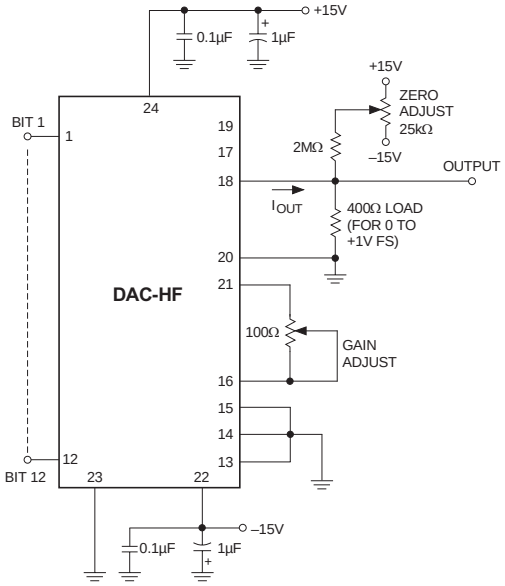

Figure 2. Unipolar Current Output Connections

Table 1. 12-Bit Unipolar Output Coding

UNIPOLAR SCALE	INPUT CODING STRAIGHT BINARY	ANALOG OUTPUT		
		0 to 1V F.S.	0 to –5V F.S.	0 to –10V F.S.
–F.S. + 1LSB	1111 1111 1111	+0.9998V	–4.9988V	–9.9976V
–3/4F.S.	1100 0000 0000	+0.7500V	–3.7500V	–7.5000V
–1/2F.S.	1000 0000 0000	+0.5000V	–2.5000V	–5.0000V
–1/4F.S.	0100 0000 0000	+2.5000V	–1.2500V	–2.5000V
–1LSB	0000 0000 0001	+0.0002V	–0.0012V	–0.0024V
0	0000 0000 0000	0.0000V	0.0000V	0.0000V

Table 2. 12-Bit Bipolar Output Coding

BIPOLAR SCALE	INPUT CODING OFFSET BINARY	ANALOG OUTPUT			
		±0.5V F.S.	±2.5V F.S.	±5V F.S.	±10V F.S.
–F.S. + 1LSB	1111 1111 1111	+0.4998V	–2.4988V	–4.9976V	–9.9951V
–1/2F.S.	1100 0000 0000	+0.1250V	–1.2500V	–2.5000V	–5.0000V
–1LSB	1000 0000 0001	+0.0002V	–0.0012V	–0.0024V	–0.0049V
0	1000 0000 0000	0.0000V	0.0000V	0.0000V	0.0000V
+1/2F.S.	0100 0000 0000	–0.1250V	+1.2500V	+2.5000V	+5.0000V
+F.S. – 1LSB	0000 0000 0001	–0.4998V	+2.4988V	+4.9976V	+9.9951V
+F.S.	0000 0000 0000	–0.5000V	+2.5000V	+5.0000V	+10.0000V

Table 3. Programmable Output Range Pin Connections

OUTPUT VOLTAGE RANGE	FEEDBACK CONNECTIONS	CONNECT THESE PINS TOGETHER
0 to –5V	PIN 19	PIN 17 to PIN 18 / PIN 20 to PIN 23
0 to –10V	PIN 19	PIN 20 to PIN 23
±2.5V	PIN 19	PIN 17 to PIN 18 / PIN 20 to PIN 18
±5V	PIN 19	PIN 20 to PIN 18
±10V	PIN 17	PIN 20 to PIN 18

In all programmable output ranges, pin 18 connects to external operational amplifier inverting input.

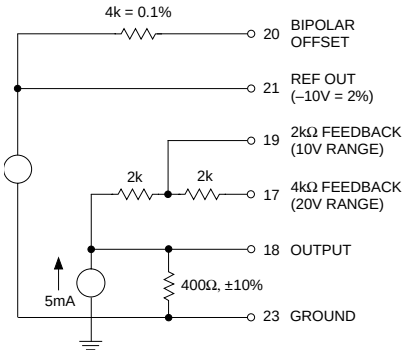

Figure 4. Equivalent Output Circuit

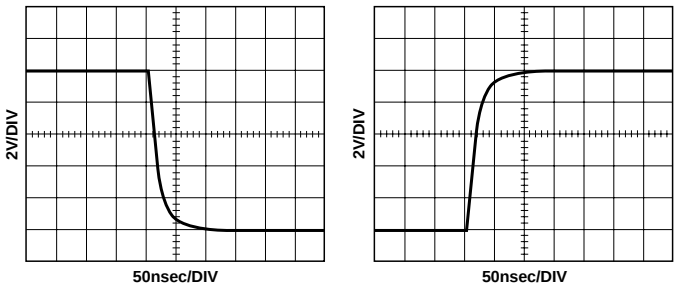

DAC-HF with AM-500, ±5V output full scale (10V) step

Figure 5. Voltage Output Waveforms

查询"DAC-HF8BMM"供应商

APPLICATIONS

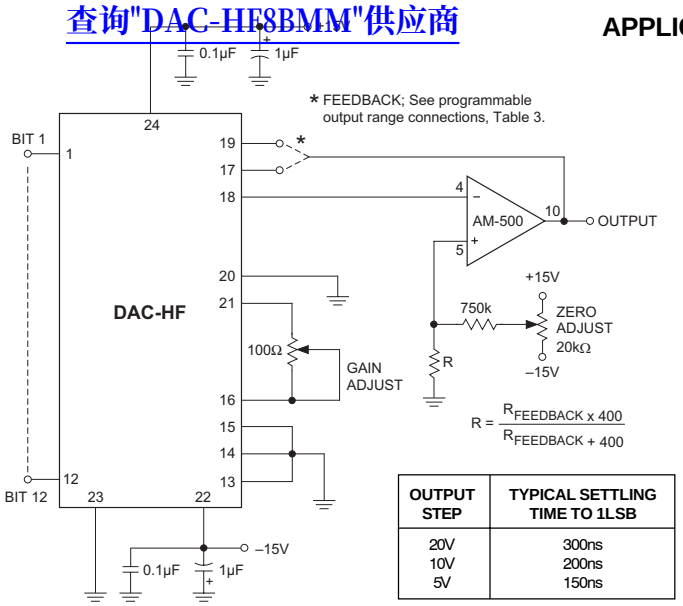

OUTPUT STEP	TYPICAL SETTLING TIME TO 1LSB
20V	300ns
10V	200ns
5V	150ns

Figure 6. Unipolar Ultra-Fast Voltage Output Circuit

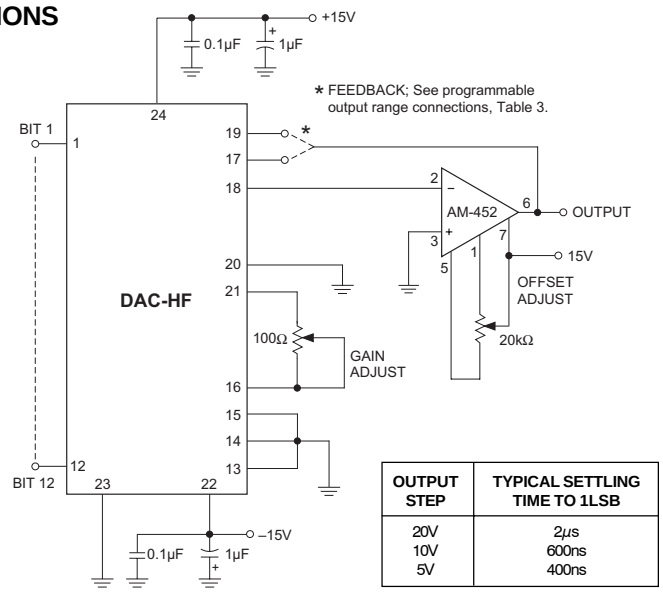

OUTPUT STEP	TYPICAL SETTLING TIME TO 1LSB
20V	2µs
10V	600ns
5V	400ns

Figure 7. Unipolar Fast Voltage Output Circuit

MECHANICAL DIMENSIONS INCHES (mm)

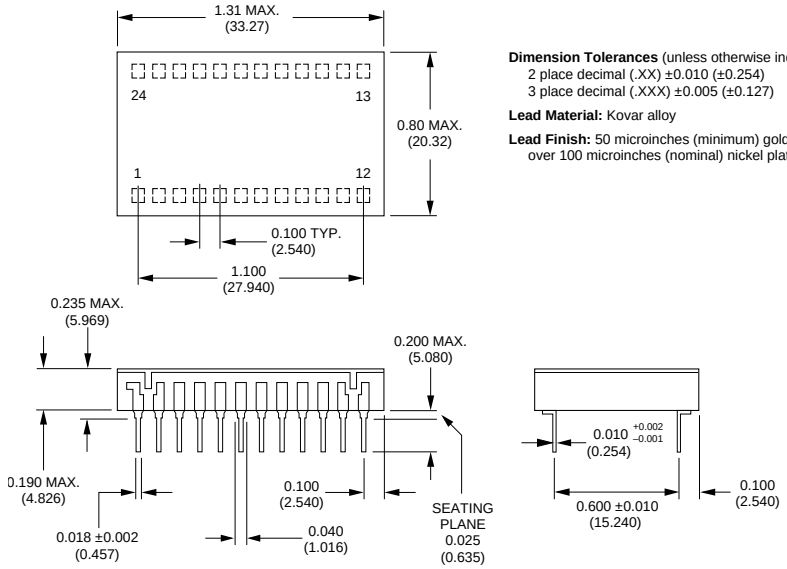

Dimension Tolerances (unless otherwise indicated):
2 place decimal (.XX) ±0.010 (±0.254)
3 place decimal (.XXX) ±0.005 (±0.127)

Lead Material: Kovar alloy

Lead Finish: 50 microinches (minimum) gold plating over 100 microinches (nominal) nickel plating

ORDERING INFORMATION

MODEL	OPERATING TEMP. RANGE	BITS
DAC-HF8BMC	0 to +70°C	8
DAC-HF8BMM	–55 to +125°C	8
DAC-HF8/883 ①	–55 to +125°C	8
DAC-HF10BMC	0 to +70°C	10
DAC-HF10BMM	–55 to +125°C	10
DAC-HF10/883 ①	–55 to +125°C	10
DAC-HF12BMC	0 to +70°C	12
DAC-HF12BMM	–55 to +125°C	12
DAC-HF12/883 ①	–55 to +125°C	12

INNOVATION and EXCELLENCE

C&D Technologies, Inc.
11 Cabot Boulevard, Mansfield, MA 02048-1151 U.S.A.
Tel: (508) 339-3000 (800) 233-2765 Fax: (508) 339-6356
www.cd4power.com **email: sales@cdtechno.com**

ISO 9001 REGISTERED

DS-0132C 6/2007

C&D Technologies, Inc. makes no representation that the use of its products in the circuits described herein, or the use of other technical information contained herein, will not infringe upon existing or future patent rights. The descriptions contained herein do not imply the granting of licenses to make, use, or sell equipment constructed in accordance therewith. Specifications are subject to change without notice.

USA: Tucson (Az), Tel: (800) 547 2537, email: sales@cdtechno.com
Portland (OR), Tel: 971 206 2800, email: portland@cdtechno.com
Canada: Toronto, Tel: (905) 944 2850, email: toronto@cdtechno.com
United Kingdom: Milton Keynes, Tel: +44 (0)1908 615232, email: mk@cdtechno.com
France: Montigny Le Bretonneux, Tel: +33 (0)1 34 60 01 01, email: france@cdtechno.com
Germany: München, Tel: +49 (0)89-544334-0, email: ped.munich@cdtechno.com
Japan: Tokyo, Tel: 3-3779-1031, email: sales_tokyo@cdtechno.com
Osaka, Tel: 6-6354-2025, email: sales_osaka@cdtechno.com
Website: www.cd4power.jp
China: Shanghai, Tel: +86 215 027 3678, email: shanghai@cdtechno.com
Guangzhou, Tel: +86 208 221 8066, email: guangzhou@cdtechno.com