查询"73084"供应商

Technical Data Sheet

Model 73084, 73085, 73086, 73088

Terminal Jacks, Male Threads 6-32, 8-32, 10-32, Female Threads 10-32

Features

- Adapter provides an easy and quick banana jack connection by replacing the screw in a terminal strip or control panel.
- Allows a standard sheathed or unsheathed banana plug / patch cord to securely connect to a terminal strip.
- Helps to avoid accidental arc-over by eliminating the usage of alligator clips, or test probe "slip offs" during measurement applications.
- Perfect for use with model **73087** jumper test lead sets in *peer-checking system* test sequences.
- *For more information, please visit our "**Articles**" section on nuclear applications at www.pomonaelectronics.com.*

Materials

Banana Jack:	Nickel-plated Brass
Insulation:	Polypropylene V-2

Specifications

Voltage:	600 Vrms, Maximum voltage for *hands free use.* For *CE compliance*, do not hold in hand when voltages exceed 33 Vrms / 70 Vdc
Current:	20 A
Operating Temperature:	-10º C to +80º C (+14º F to 176º F)
Torque In/Lb.:	***73084***: 7
	73085: 20
	73086: 20
	73088: 16

Dimensions

Model 73086, 10-32 Female Terminal Jack

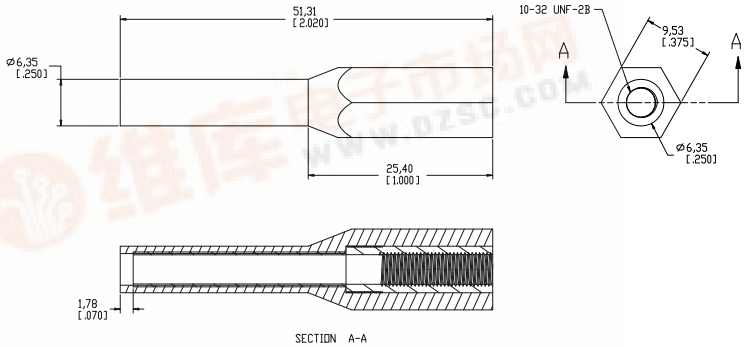

USA: Sales: 800-490-2361
Technical Support: technicalsupport@pomonatest.com
Fax: 425-446-5844
Europe: 31-(0) 40 2675 150 **International:** 425-446-5500
Where to Buy: www.pomonaelectronics.com

All dimensions are in inches. Tolerances (except noted): .xx = ±.02" (,51 mm), .xxx = ± .005" (,127 mm). All specifications are to the latest revisions. Specifications are subject to change without notice. Registered trademarks are the property of their respective companies.

Copyright © 2009

pdf.dzsc.com

查询"73084"供应商

Model 73084, 73085, 73086, 73088

Terminal Jacks, Male Threads 6-32, 8-32, 10-32, Female Threads 10-32

Model 73084, 6-32 Male Terminal Jack

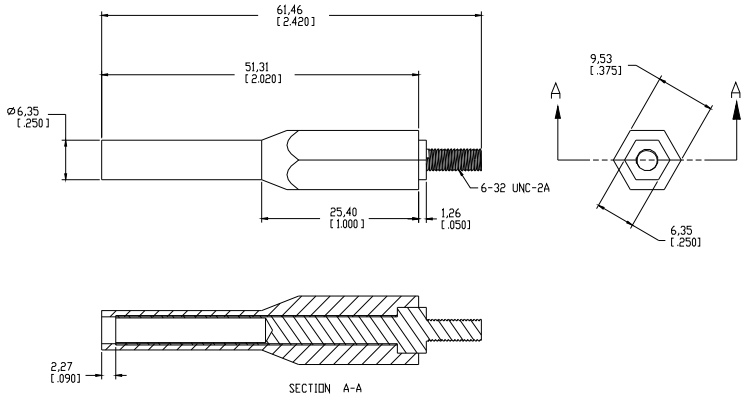

Model 73088, 8-32 Male Terminal Jack

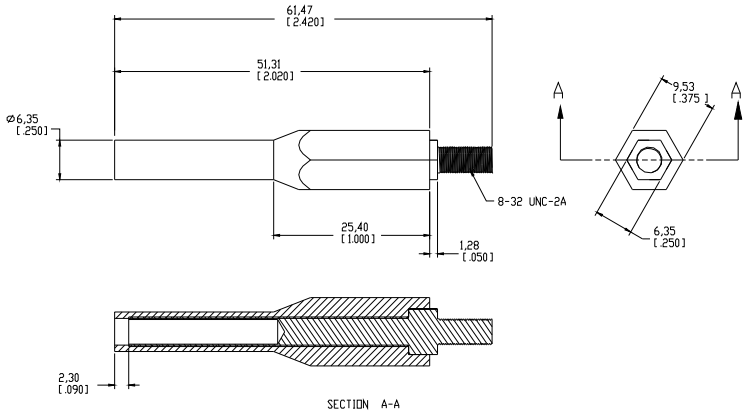

Model 73085, 10-32 Male Terminal Jack

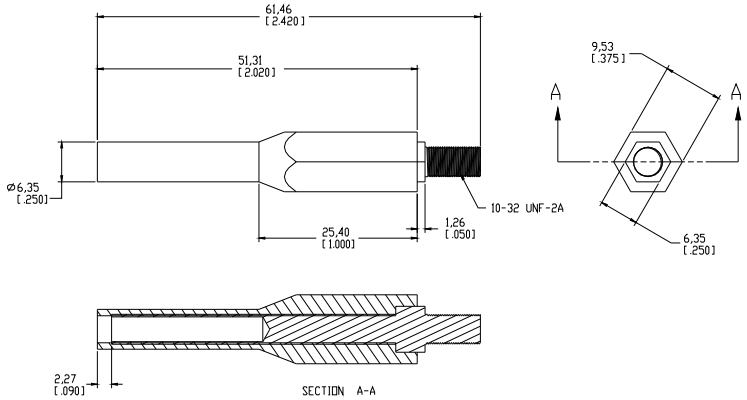

Ordering Information

Model: **73084, 73085, 73086, 73088**
Standard Colors: -0 Black, -2 Red, -4 Yellow, -6 Blue
Ordering Example: **73084-2**, (**73084** terminal jack with Red insulation)

USA: Sales: 800-490-2361
Technical Support: technicalsupport@pomonatest.com
Fax: 425-446-5844
Europe: 31-(0) 40 2675 150 **International:** 425-446-5500
Where to Buy: www.pomonaelectronics.com

All dimensions are in inches. Tolerances (except noted): .xx = ±.02" (,51 mm), .xxx = ± .005" (,127 mm). All specifications are to the latest revisions. Specifications are subject to change without notice. Registered trademarks are the property of their respective companies.

Copyright © 2009