U32F Series

查询"E32F351HPN222MCA5M"供应商

UNITED CHEMI-CON

- Large Can
- Screw Terminals
- Longer Life U32 Grade
- High Ripple
- 350 to 500VDC Ratings
- RoHS Compliant
- +105°C Maximum Temperature

The U32F series is a longer life version of the industry standard U32D specifically designed to provide the ripple current capability and long life required for the highest reliability inverter applications. The U32F has an endurance rating of 5,000 hours at +105°C or 20,000 hours at +85°C with the rated ripple current applied. These capacitors are available with a variety of high current English or Metric thread terminals. Mounting options include a three-footed clamp or a bottom stud. Custom designs are available upon request.

Summary of Specifications

- **Screw terminals: high and low post, English and Metric thread.**
- **Capacitance range: 1,500 to 18,000μF.**
- **Voltage range: 350 to 500VDC.**
- **Category temperature range: −40°C to +105°C.**
- **Leakage current: 0.02CV(μA) or 5mA, whichever is smaller, after 5 minutes at +25°C.**
- **Standard capacitance tolerance: ±20%**
- **Nominal case size (D×L): D = 50mm (2.000") to 89mm (3.500"); L = 79mm (3.125") to 220mm (8.625").**
- **Rated lifetime: 5,000 hours at +105°C with rated ripple current applied.**

找PDF 维库一下 pdf.dzsc.com

U32F Specifications - Screw Terminals

查询"E32F351HPN222MCA5M"供应商

Item	Characteristics
Category Temperature Range	−40 to +105°C
Rated Voltage Range	350 to 500VDC
Capacitance Range	1,500 to 15,000μF at +25°C, 120Hz
Capacitance Tolerance	±20% (M) at +25°C, 120Hz
Leakage Current	I = 0.02CV (μA) or 5mA, whichever is smaller, after 5 minutes at +25°C. Where I = Max. leakage current (μA), C = Nominal capacitance (μF) and V = Rated voltage (V)
Rated Ripple Current Multipliers	Ambient Temperature (°C)

+45°C	+65°C	+85°C	+105°C
1.64	1.42	1.00	0.58

Endurance (Load Life)	The following specifications shall be satisfied when the capacitors are restored to +25°C after subjecting them to DC voltage for 5,000 hours at +105°C with the rated ripple current applied. The sum of the DC voltage and peak AC voltage must not exceed the full rated voltage of the capacitors. Capacitance change: ≤ 20% from initial measurement ESR change : ≤ 200% of initial specified limit Leakage current : ≤ initial specified limit
Shelf Life	The following specifications shall be satisfied when the capacitors are restored to +25°C after exposing them for 500 hours at +105°C without voltage applied. The rated voltage shall be applied to the capacitors for a minimum of 30 minutes, at least 24 hours and not more than 48 hours before the measurements. Capacitance change: ≤ 20% from initial measurement ESR change : ≤ 200% of initial specified limit Leakage current : ≤ initial specified limit
Vibration Rating	10-55Hz, 10g sinusoidal in three axis, 2 hours per axis.

Maximum Tightening Torque

Terminal Code	Thread Size	3 Threads Engaged		6 Threads Engaged	
		in·lb	N·m	in·lb	N·m
HP	10-32 NF-2B	18.0	2.0	25.0	2.8
HL	M5x0.8-6H	18.0	2.0	25.0	2.8
CD	M5x0.8-6H	18.0	2.0	25.0	2.8
CP	¼-28 NF-2B	35.0	4.0	55.0	6.2
CH	¼-28 NF-2B	35.0	4.0	55.0	6.2
CA	M6x1-6H	35.0	4.0	55.0	6.2
CS	M6x1-6H	35.0	4.0	55.0	6.2

Typical Inductance (nH) at 1MHz

Terminal Code	Case Diameter			
	Ø50	Ø63.5	Ø76	Ø89
HP	20	22	25	NA
HL	20	22	25	NA
CD	NA	18	22	NA
CP	NA	14	18	18
CH	NA	16	20	20
CA	NA	14	18	18
CS	NA	16	20	20

Custom Designs	Custom CV values per case size and termination type may be available upon request. Contact appropriate representative with specific requirements.

Diagram of Dimensions - Screw Terminals

查询"E32F351HPN222MCA5M"供应商

Large Can/Screw Terminals

Unit: mm (inches)

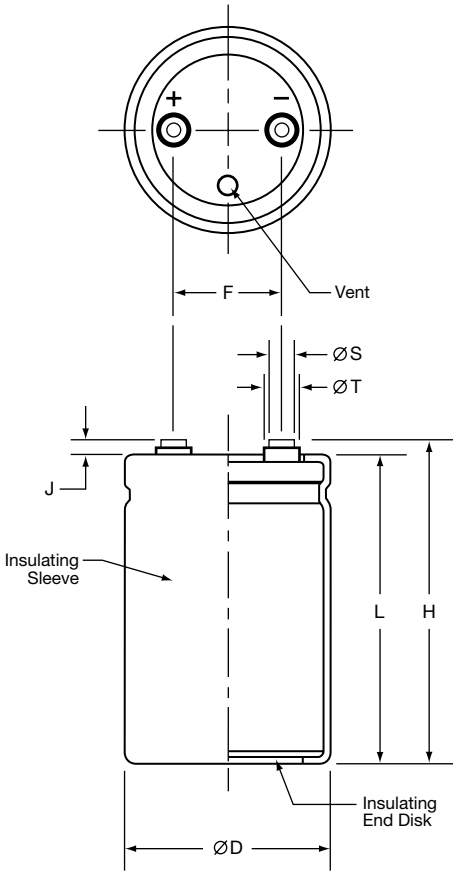

Case Dimensions

Case Size Code	øD +2.0 (0.080)	L ±1.0 (0.040)	F ±0.25 (0.010)
CA5 CB7 CD0 CE3	50.8 (2.000)	105 (4.125) 117 (4.625) 130 (5.125) 143 (5.625)	22.2 (0.875)
D79 D92 DA5 DB7 DD0 DE3 DN0	63.5 (2.500)	79 (3.125) 92 (3.625) 105 (4.125) 117 (4.625) 130 (5.125) 143 (5.625) 220 (8.625)	28.6 (1.125)
E79 E92 EA5 EB7 ED0 EE3 EJ0 EN0	76.2 (3.000)	79 (3.125) 92 (3.625) 105 (4.125) 117 (4.625) 130 (5.125) 143 (5.625) 180 (7.125) 220 (8.625)	31.8 (1.250)
F92 FA5 FB7 FD0 FE3 FF5 FK0 FN0	89.0 (3.500)	92 (3.625) 105 (4.125) 117 (4.625) 130 (5.125) 143 (5.625) 155 (6.125) 190 (7.500) 220 (8.625)	31.8 (1.250)

Terminal Specifications

Terminal Code	Available Case Diameter		Thread Size	Minimum Thread Depth	J ±0.5 (0.020)	H ±2.0 (0.080)	øS ±0.25 (0.010)	øT ±0.25 (0.010)
	øD Code	øD mm (inches)						
HP	C	50.8 (2.000)	10-32 NF-2B	9.5 (0.375)	6.4 (0.250)	L+J	8.0 (0.313)	11.1 (0.438)
HL	C	50.8 (2.000)	M5x0.8-6H	9.5 (0.375)	6.4 (0.250)	L+J	8.0 (0.313)	11.1 (0.438)
CD	D-E	63.5 – 76.2 (2.500 – 3.000)	M5x0.8-6H	8.5 (0.335)	5.0 (0.200)	L+J	13.0 (0.512)	18.8 (0.740)
CP	D-F	63.5 – 89.0 (2.500 – 3.500)	¼-28 NF-2B	8.7 (0.344)	2.4 (0.093)	L+J	17.5 (0.689)	—
CH	D-F	63.5 – 89.0 (2.500 – 3.500)	¼-28 NF-2B	11.9 (0.468)	6.4 (0.250)	L+J	17.5 (0.689)	—
CA	D-F	63.5 – 89.0 (2.500 – 3.500)	M6x1-6H	8.7 (0.344)	2.4 (0.093)	L+J	17.5 (0.689)	—
CS	D-F	63.5 – 89.0 (2.500 – 3.500)	M6x1-6H	11.9 (0.468)	6.4 (0.250)	L+J	17.5 (0.689)	—

Mounting Hardware - Screw Terminals

查询"E32F351HPN222MCA5M"供应商

Type C: Three-Footed Clamp

Unit: mm (inches)

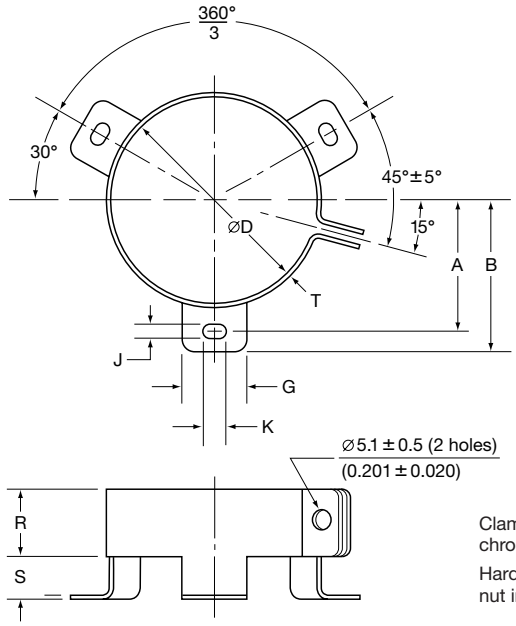

Clamp: Zinc with silver trivalent chromate post treatment.

Hardware: Screw, washer and hexagon nut included with each clamp.

Type C: Clamp Dimensions

Mounting Code	Case ØD	A ±1.0 (0.040)	B ±1.0 (0.040)	G ±1.0 (0.040)	J ±0.5 (0.020)	K ±0.5 (0.020)	R ±1.0 (0.040)	S ±1.0 (0.040)	T ±0.5 (0.020)
C	50.8 (2.000)	31.8 (1.250)	36.5 (1.437)	13.3 (0.524)	4.5 (0.177)	7.1 (0.280)	19.1 (0.751)	9.5 (0.374)	0.8 (0.032)
C	63.5 (2.500)	38.1 (1.500)	42.9 (1.689)	13.3 (0.524)	4.5 (0.177)	7.1 (0.280)	19.1 (0.751)	9.5 (0.374)	0.8 (0.032)
C	76.2 (3.000)	44.5 (1.750)	49.2 (1.937)	13.3 (0.524)	4.5 (0.177)	7.1 (0.280)	19.1 (0.751)	9.5 (0.374)	1.0 (0.040)
C	89.0 (3.500)	50.8 (2.000)	56.5 (2.224)	16.0 (0.630)	4.5 (0.177)	8.0 (0.313)	21.0 (0.827)	9.0 (0.354)	1.0 (0.040)

Note: Type B two-footed clamp available upon request for Ø50.8, Ø63.5 and Ø76.2. Consult UCC for specifications.

Type S: Stud Mounting

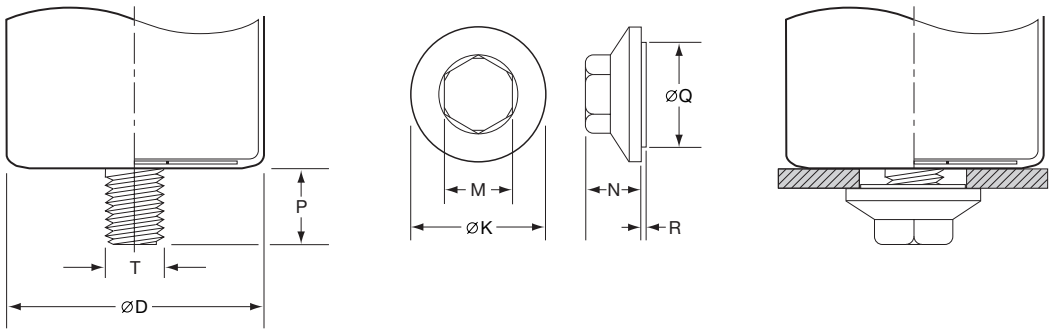

Type S: Stud Mounting Dimensions

Mounting Code	P ±1.0 (0.040)	T Thread Size	M ±1.0 (0.040)	N ±1.0 (0.040)	ØK ±2.0 (0.080)	ØQ ±1.0 (0.040)	R ±1.0 (0.040)
S	16.0 (0.630)	M12	19.0 (0.748)	18.0 (0.709)	30.0 (1.181)	22.0 (0.866)	1.40 (0.055)

Part Numbering System for U32F Series

When ordering, always specify complete 18-field global part number.

查询"E32F351HPN222MCA5M"供应商

18 Fields

1	2	3	4	5	6	7	8	9	10	11	12	13	14	15	16	17	18
E	3	2	F	4	5	1	C	P	N	2	2	2	M	E	9	2	M

9 Supplement Code. Field 18.
- C = PET insulation with end disk.
- F = Coated can.
- M = Pb-free PVC insulation with end disk.

8 Case Size. Fields 15, 16 and 17.
The single letter diameter code is inserted in field 15.
- C = Ø50.8mm (Ø2.000")
- D = Ø63.5mm (Ø2.500")
- E = Ø76.2mm (Ø3.000")
- F = Ø89mm (Ø3.500")

The double character length code is inserted in fields 16 and 17. For lengths ≤99mm, insert the actual length rounded to nearest millimeter. For lengths of 100mm or more, insert the appropriate alpha numeric code as indicated below.
- 92 = 92mm (3.625")
- A5 = 105mm (4.125")
- B7 = 117mm (4.625")
- D0 = 130mm (5.125")
- E3 = 143mm (5.625")
- F5 = 155mm (6.125")
- J0 = 180mm (7.125")
- K0 = 190mm (7.500")
- N0 = 220mm (8.625")

7 Capacitance Tolerance. Field 14.
- M = ±20%

6 Capacitance. Fields 11, 12 and 13.
Expressed in Microfarads. The first two digits are significant figures inserted in fields 11 and 12, and the third digit inserted in field 13 indicates the number of zeros for capacitance of 10µF or more. R indicates the decimal point for capacitance less than 10µF (e.g. 2R2 = 2.2µF; 220 = 22µF; 221 = 220µF; 222 = 2,200µF; 223 = 22,000µF).

5 Mounting Hardware. Field 10.
- N = None.
- B = Two-footed clamp.
- C = Three-footed clamp.
- S = Stud mount.

4 Terminal Type. Fields 8 and 9.
- HP = High post 10-32 NF-2B screw thread.
- HL = High post M5x0.8 screw thread.
- CD = UTE M5x0.8 screw thread.
- CP = Low post 1/4-28 NF-2B screw thread.
- CH = High post 1/4-28 NF-2B screw thread.
- CA = Low post M6x1 screw thread.
- CS = High post M6x1 screw thread.

3 DC Rated Voltage. Fields 5, 6 and 7.
Expressed in Volts. The first two digits are significant figures inserted in fields 5 and 6, and the third digit inserted in field 7 indicates the number of zeros for rated voltage of 10VDC or more. R indicates the decimal point for rated voltage less than 10VDC (e.g. 4R5 = 4.5VDC; 450 = 45VDC; 451 = 450VDC).

2 Series Name. Fields 2, 3 and 4.
Enter the 3-letter/digit series name in fields 2, 3 and 4. If the series name is only 2 letters/digits, place a dash in field 4. For a series name with more than 3 letters/digits, refer to the individual series for the appropriate 3-field series name.

1 Capacitor Type. Field 1.
Aluminum Electrolytic Capacitor (Polar).

Standard Voltage Ratings - Screw Terminals

查询"E32F351HPN222MCA5M"供应商

Rated Voltage (WVDC)	Capacitance (µF)	Global Part Number†	Nominal Case Size* D×L (mm)	Case Size Code	Maximum ESR (mΩ) at +25°C, 120Hz	Rated Ripple Current (A rms) at +85°C		
						120Hz	300Hz	>3kHz
350 Volts 400 Volts Surge	2,200	E32F351HPN222MCA5M	50 × 105	CA5	45	8.2	9.9	11.5
	2,200	E32F351HPN222MCE3M	50 × 143	CE3	39	10.3	13.4	15.4
	2,700	E32F351HPN272MCB7M	50 × 117	CB7	37	9.6	11.5	13.4
	3,300	E32F351HPN332MCE3M	50 × 143	CE3	30	11.6	13.9	16.2
	2,200	E32F351CPN222MD92M	63.5 × 92	D92	45	8.2	9.9	11.5
	2,200	E32F351CPN222MDB7M	63.5 × 117	DB7	39	10.3	13.4	15.4
	2,700	E32F351CPN272MDA5M	63.5 × 105	DA5	37	9.6	11.5	13.4
	2,700	E32F351CPN272MDD0M	63.5 × 130	DD0	32	12.4	16.1	18.6
	3,300	E32F351CPN332MDB7M	63.5 × 117	DB7	30	11.6	13.9	16.2
	3,300	E32F351CPN332MDE3M	63.5 × 143	DE3	26	14.3	18.6	21.4
	3,900	E32F351CPN392MDD0M	63.5 × 130	DD0	26	13.6	16.4	19.1
	4,700	E32F351CPN472MDE3M	63.5 × 143	DE3	21	15.1	18.2	21.2
	2,700	E32F351CPN272ME92M	76 × 92	E92	32	12.4	16.1	18.6
	3,300	E32F351CPN332MEA5M	76 × 105	EA5	26	14.3	18.6	21.4
	3,900	E32F351CPN392ME92M	76 × 92	E92	26	13.6	16.4	19.1
	3,900	E32F351CPN392MED0M	76 × 130	ED0	22	16.5	21.4	24.7
	4,700	E32F351CPN472MEA5M	76 × 105	EA5	21	15.1	18.2	21.2
	4,700	E32F351CPN472MEE3M	76 × 143	EE3	18	18.8	24.5	28.2
	5,600	E32F351CPN562MED0M	76 × 130	ED0	18	18.1	21.7	25.4
	5,600	E32F351CPN562MEJ0M	76 × 180	EJ0	15	21.5	28.0	32.3
	6,800	E32F351CPN682MEE3M	76 × 143	EE3	16	21.4	23.6	30.1
	8,200	E32F351CPN822MEB7M	76 × 180	EJ0	12	23.9	28.7	36.7
	8,200	E32F351CPN822MEN0M	76 × 220	EN0	11	30.1	39.2	45.2
	10,000	E32F351CPN103MEN0M	76 × 220	EN0	10	27.5	33.0	38.5
	3,900	E32F351CPN392MF92M	89 × 92	F92	22	16.5	21.4	24.7
	4,700	E32F351CPN472MFB7M	89 × 117	FB7	18	18.8	24.5	28.2
	5,600	E32F351CPN562MFA5M	89 × 105	FA5	18	18.1	21.7	25.4
	5,600	E32F351CPN562MFD0M	89 × 130	FD0	15	21.5	28.0	32.3
	6,800	E32F351CPN682MFB7M	89 × 117	FB7	16	21.4	23.6	30.1
	6,800	E32F351CPN682MFE3M	89 × 143	FE3	13	24.7	32.1	37.1
	8,200	E32F351CPN822MFD0M	89 × 130	FD0	12	23.9	28.7	36.7
	8,200	E32F351CPN822MFK0M	89 × 190	FK0	11	30.1	39.2	45.2
	10,000	E32F351CPN103MFE3M	89 × 143	FE3	10	27.5	33.0	38.5
	10,000	E32F351CPN103MFN0M	89 × 220	FN0	9	36.2	47.1	54.3
	12,000	E32F351CPN123MFK0M	89 × 190	FK0	8	34.2	41.0	47.9
	15,000	E32F351CPN153MFN0M	89 × 220	FN0	7	40.7	48.8	57.0
400 Volts 450 Volts Surge	1,800	E32F401HPN182MCB7M	50 × 117	CB7	56	7.8	9.4	11.0
	1,800	E32F401HPN182MCE3M	50 × 143	CE3	48	9.3	12.1	14.0
	2,200	E32F401HPN222MCD0M	50 × 130	CD0	45	9.1	10.9	12.7
	1,800	E32F401CPN182MD92M	63.5 × 92	D92	56	7.8	9.4	11.0
	1,800	E32F401CPN182MDB7M	63.5 × 117	DB7	48	9.3	12.1	14.0
	2,200	E32F401CPN222MDA5M	63.5 × 105	DA5	45	9.1	10.9	12.7
	2,200	E32F401CPN222MDD0M	63.5 × 130	DD0	39	10.7	13.9	16.0
	2,700	E32F401CPN272MDB7M	63.5 × 117	DB7	37	10.9	13.0	15.2
	3,300	E32F401CPN332MDE3M	63.5 × 143	DE3	30	12.7	15.2	17.7
	2,200	E32F401CPN222ME92M	76 × 92	E92	39	10.7	13.9	16.0
	2,700	E32F401CPN272M292M	76 × 92	E92	37	10.9	13.0	15.2
	2,700	E32F401CPN272MEB7M	76 × 117	EB7	32	12.9	16.8	19.4
	3,300	E32F401CPN332MEA5M	76 × 105	EA5	30	12.7	15.2	17.7
	3,300	E32F401CPN332MED0M	76 × 130	ED0	26	15.1	19.7	22.7
	3,900	E32F401CPN392MEB7M	76 × 117	EB7	26	16.3	19.8	23.1
	3,900	E32F401CPN392MEE3M	76 × 143	EE3	22	17.1	22.3	25.7
	4,700	E32F401CPN472MED0M	76 × 130	ED0	21	16.5	19.8	23.1
	4,700	E32F401CPN472MEJ0M	76 × 180	EJ0	18	19.7	25.6	29.6
	5,600	E32F401CPN562MEE3M	76 × 143	EE3	18	18.9	22.7	26.5
	5,600	E32F401CPN562MEN0M	76 × 220	EN0	15	22.4	29.1	33.6
	6,800	E32F401CPN682MEJ0M	76 × 180	EJ0	15	22.7	27.2	31.7
	8,200	E32F401CPN822MEN0M	76 × 220	EN0	12	25.8	31.0	36.1

†For terminal, mounting and construction options, refer to the part numbering system for descriptions and codes.
*** Refer to diagram of dimensions for detailed case size specifications.**

Standard Voltage Ratings - Screw Terminals

查询"E32F351HPN222MCA5M"供应商

Rated Voltage (WVDC)	Capacitance (µF)	Global Part Number†	Nominal Case Size* D×L (mm)	Case Size Code	Maximum ESR (mΩ) at +25°C, 120Hz	Rated Ripple Current (A rms) at +85°C		
						120Hz	300Hz	>3kHz
400 Volts 450 Volts Surge	2,700	E32F401CPN272MF92M	89 × 92	F92	32	12.9	16.8	19.4
	3,300	E32F401CPN332MFA5M	89 × 105	FA5	26	15.1	19.7	22.7
	3,900	E32F401CPN392MF92M	89 × 92	F92	26	16.3	19.8	23.1
	3,900	E32F401CPN392MFB7M	89 × 117	FB7	22	17.1	22.3	25.7
	4,700	E32F401CPN472MFA5M	89 × 105	FA5	21	16.5	19.8	23.1
	4,700	E32F401CPN472MFD0M	89 × 130	FD0	18	19.7	25.6	29.6
	5,600	E32F401CPN562MFB7M	89 × 117	FB7	18	18.9	22.7	26.5
	5,600	E32F401CPN562MFE3M	89 × 143	FE3	15	22.4	29.1	33.6
	6,800	E32F401CPN682MFE3M	89 × 143	FE3	15	22.7	27.2	31.7
	6,800	E32F401CPN682MFK0M	89 × 190	FK0	13	28.0	36.4	42.0
	8,200	E32F401CPN822MFF5M	89 × 155	FF5	12	25.8	31.0	36.1
	8,200	E32F401CPN822MFN0M	89 × 220	FN0	11	32.8	42.6	49.2
	10,000	E32F401CPN103MFK0M	89 × 190	FK0	10	31.2	37.5	43.7
	12,000	E32F401CPN123MFN0M	89 × 220	FN0	8	36.4	43.7	51.0
420 Volts 470 Volts Surge	1,500	E32F421HPN152MCA5M	50 × 105	CA5	89	6.7	8.0	9.4
	1,500	E32F421HPN152MCD0M	50 × 130	CD0	76	8.0	10.4	12.0
	1,800	E32F421HPN182MCB7M	50 × 117	CB7	74	7.7	9.3	10.8
	1,800	E32F421HPN182MCE3M	50 × 143	CE3	63	9.2	11.9	13.7
	2,200	E32F421HPN222MCE3M	50 × 143	CE3	61	9.3	11.2	13.0
	1,500	E32F421CPN152MD92M	63.5 × 92	D92	89	6.7	8.0	9.4
	1,500	E32F421CPN152MDA5M	63.5 × 105	DA5	76	8.0	10.4	12.0
	1,800	E32F421CPN182MDA5M	63.5 × 105	DA5	74	7.7	9.3	10.8
	1,800	E32F421CPN182MDB7M	63.5 × 117	DB7	63	9.2	11.9	13.7
	2,200	E32F421CPN222MDB7M	63.5 × 117	DB7	61	9.3	11.2	13.0
	2,200	E32F421CPN222MDE3M	63.5 × 143	DE3	52	11.1	14.4	16.6
	2,700	E32F421CPN272MDD0M	63.5 × 130	DD0	49	11.1	13.4	15.7
	3,900	E32F421CPN392MDN0M	63.5 × 220	DN0	29	17.6	22.9	26.5
	2,200	E32F421CPN222MEA5M	76 × 105	EA5	52	11.1	14.4	16.6
	2,700	E32F421CPN272MEA5M	76 × 105	EA5	49	11.1	13.4	15.7
	2,700	E32F421CPN272MEB7M	76 × 117	EB7	42	12.9	16.7	19.3
	3,300	E32F421CPN332MEB7M	76 × 117	EB7	40	12.9	15.5	18.1
	3,300	E32F421CPN332MEE3M	76 × 143	EE3	34	14.8	19.3	22.2
	3,900	E32F421CPN392MED0M	76 × 130	ED0	34	14.8	17.8	20.8
	4,700	E32F421CPN472MEE3M	76 × 143	EE3	28	17.0	20.4	23.8
	4,700	E32F421CPN472MEJ0M	76 × 180	EJ0	24	20.2	26.2	30.2
	5,600	E32F421CPN562MEJ0M	76 × 180	EJ0	24	19.5	23.4	27.3
	5,600	E32F421CPN562MEN0M	76 × 220	EN0	20	22.8	29.7	34.2
	6,800	E32F421CPN682MEN0M	76 × 220	EN0	20	22.3	26.8	31.3
	2,700	E32F421CPN272MF92M	89 × 92	F92	42	12.9	16.7	19.3
	3,300	E32F421CPN332MF92M	89 × 92	F92	40	12.9	15.5	18.1
	3,300	E32F421CPN332MFA5M	89 × 105	FA5	34	14.8	19.3	22.2
	3,900	E32F421CPN392MFA5M	89 × 105	FA5	34	14.8	17.8	20.8
	3,900	E32F421CPN392MFD0M	89 × 130	FD0	29	17.6	22.9	26.5
	4,700	E32F421CPN472MFB7M	89 × 117	FB7	28	17.0	20.4	23.8
	4,700	E32F421CPN472MFE3M	89 × 143	FE3	24	20.2	26.2	30.2
	5,600	E32F421CPN562MFD0M	89 × 130	FD0	24	19.5	23.4	27.3
	5,600	E32F421CPN562MFF5M	89 × 155	FF5	20	22.8	29.7	34.2
	6,800	E32F421CPN682MFE3M	89 × 143	FE3	20	22.3	26.8	31.3
	6,800	E32F421CPN682MFK0M	89 × 190	FK0	17	27.5	35.8	41.3
	8,200	E32F421CPN822MFD0M	89 × 190	FK0	16	27.8	33.4	39.0
	8,200	E32F421CPN822MFN0M	89 × 220	FN0	14	32.2	41.8	48.3
	10,000	E32F421CPN103MFN0M	89 × 220	FN0	13	32.7	39.3	45.8
450 Volts 500 Volts Surge	1,500	E32F451HPN152MCB7M	50 × 117	CB7	89	7.0	8.4	9.9
	1,500	E32F451HPN152MCE3M	50 × 143	CE3	76	8.4	10.9	12.7
	1,800	E32F451HPN182MCD0M	50 × 130	CD0	74	8.1	9.7	11.3
	1,500	E32F451CPN152MD92M	63.5 × 92	D92	89	7.0	8.4	9.9
	1,500	E32F451CPN152MDB7M	63.5 × 117	DB7	76	8.4	10.9	12.7

†For terminal, mounting and construction options, refer to the part numbering system for descriptions and codes.
*** Refer to diagram of dimensions for detailed case size specifications.**

Standard Voltage Ratings - Screw Terminals

查询"E32F351HPN222MCA5M"供应商

Rated Voltage (WVDC)	Capacitance (µF)	Global Part Number†	Nominal Case Size* D×L (mm)	Case Size Code	Maximum ESR (mΩ) at +25°C, 120Hz	Rated Ripple Current (A rms) at +85°C		
						120Hz	300Hz	>3kHz
450 Volts 500 Volts Surge	1,800	E32F451CPN182MDA5M	63.5 × 105	DA5	74	8.1	9.7	11.3
	1,800	E32F451CPN182MDD0M	63.5 × 130	DD0	63	9.5	12.3	14.2
	2,200	E32F451CPN222MDA5M	63.5 × 105	DA5	61	9.6	11.6	13.5
	2,200	E32F451CPN222MDE3M	63.5 × 143	DE3	52	11.4	14.9	17.1
	2,700	E32F451CPN272MDE3M	63.5 × 143	DE3	49	11.3	13.5	15.8
	1,800	E32F451CPN182ME92M	76 × 92	E92	63	9.5	12.3	14.2
	2,200	E32F451CPN222ME92M	76 × 92	E92	61	9.6	11.6	13.5
	2,200	E32F451CPN222MEB7M	76 × 117	EB7	52	11.4	14.9	17.1
	2,700	E32F451CPN272MEA5M	76 × 105	EA5	49	11.3	13.5	15.8
	2,700	E32F451CPN272MED0M	76 × 130	ED0	42	13.4	17.5	20.2
	3,300	E32F451CPN332MEB7M	76 × 117	EB7	40	12.9	15.5	18.1
	3,300	E32F451CPN332MEE3M	76 × 143	EE3	34	15.5	20.1	23.2
	3,900	E32F451CPN392MED0M	76 × 130	ED0	34	14.8	17.8	20.8
	3,900	E32F451CPN392MEJ0M	76 × 180	EJ0	29	17.6	22.9	26.5
	4,700	E32F451CPN472MEE3M	76 × 143	EE3	28	17.1	20.5	23.9
	4,700	E32F451CPN472MEN0M	76 × 220	EN0	24	20.9	27.2	31.4
	5,600	E32F451CPN562MEJ0M	76 × 180	EJ0	24	20.3	24.3	28.4
	6,800	E32F451CPN682MEN0M	76 × 220	EN0	20	23.2	27.8	32.4
	2,700	E32F451CPN272MFA5M	89 × 105	FA5	42	13.4	17.5	20.2
	3,300	E32F451CPN332MF92M	89 × 92	F92	40	12.9	15.5	18.1
	3,300	E32F451CPN332MFB7M	89 × 117	FB7	34	15.5	20.1	23.2
	3,900	E32F451CPN392MFA5M	89 × 105	FA5	34	14.8	17.8	20.8
	3,900	E32F451CPN392MFD0M	89 × 130	FD0	29	17.6	22.9	26.5
	4,700	E32F451CPN472MFB7M	89 × 117	FB7	28	17.1	20.5	23.9
	4,700	E32F451CPN472MFF5M	89 × 155	FF5	24	20.9	27.2	31.4
	5,600	E32F451CPN562MFE3M	89 × 143	FE3	24	20.3	24.3	28.4
	5,600	E32F451CPN562MFK0M	89 × 190	FK0	20	25.0	32.5	37.5
	6,800	E32F451CPN682MFF5M	89 × 155	FF5	20	23.2	27.8	32.4
	6,800	E32F451CPN682MFN0M	89 × 220	FN0	17	29.3	38.1	44.0
	8,200	E32F451CPN822MFK0M	89 × 190	FK0	16	27.8	33.4	39.0
	10,000	E32F451CPN103MFN0M	89 × 220	FN0	13	32.7	39.3	45.8
500 Volts 550 Volts Surge	1,500	E32F501HPN152MCD0M	50 × 130	CD0	107	6.7	8.0	9.4
	1,500	E32F501CPN152MD92M	63.5 × 92	D92	107	6.7	8.0	9.4
	1,500	E32F501CPN152MDD0M	63.5 × 130	DD0	93	8.3	10.8	12.5
	1,800	E32F501CPN182MDA5M	63.5 × 105	DA5	89	7.7	9.2	10.8
	1,800	E32F501CPN182MDE3M	63.5 × 143	DE3	78	9.5	12.4	14.3
	2,200	E32F501CPN222MDD0M	63.5 × 130	DD0	73	9.0	10.8	12.6
	2,700	E32F501CPN272MDE3M	63.5 × 143	DE3	59	10.5	21.6	14.7
	1,500	E32F501CPN152ME92M	76 × 92	E92	93	8.3	10.8	12.5
	1,800	E32F501CPN182MEA5M	76 × 105	EA5	78	9.5	12.4	14.3
	2,200	E32F501CPN222ME92M	76 × 92	E92	73	9.0	10.8	12.6
	2,200	E32F501CPN222MEB7M	76 × 117	EB7	64	10.7	13.9	16.0
	2,700	E32F501CPN272MEA5M	76 × 105	EA5	59	10.5	21.6	14.7
	2,700	E32F501CPN272MEE3M	76 × 143	EE3	52	12.9	16.8	19.4
	3,300	E32F501CPN332MED0M	76 × 130	ED0	48	12.1	14.5	16.9
	3,300	E32F501CPN332MEJ0M	76 × 180	EJ0	42	14.9	19.4	22.4
	3,900	E32F501CPN392MEE3M	76 × 143	EE3	41	13.8	16.6	19.3
	3,900	E32F501CPN392MEN0M	76 × 220	EN0	36	17.5	22.8	26.3
	4,700	E32F501CPN472MEF5M	76 × 155	EF5	34	16.6	19.9	23.3
	5,600	E32F501CPN562MEJ0M	76 × 180	EJ0	29	18.9	22.7	26.4
	6,800	E32F501CPN682MEN0M	76 × 220	EN0	24	23.1	27.8	32.4
	2,200	E32F501CPN222MFA5M	89 × 105	FA5	64	10.7	13.9	16.0
	2,700	E32F501CPN272MFB7M	89 × 117	FB7	52	12.9	16.8	19.4
	3,300	E32F501CPN332MF92M	89 × 92	F92	48	12.1	14.5	16.9
	3,300	E32F501CPN332MFD0M	89 × 130	FD0	42	14.9	19.4	22.4
	3,900	E32F501CPN392MFA5M	89 × 105	FA5	41	13.8	16.6	19.3
	3,900	E32F501CPN392MFF5M	89 × 155	FF5	36	17.5	22.8	26.3

†For terminal, mounting and construction options, refer to the part numbering system for descriptions and codes.
*** Refer to diagram of dimensions for detailed case size specifications.**

Standard Voltage Ratings - Screw Terminals

查询"E32F351HPN222MCA5M"供应商

Rated Voltage (WVDC)	Capacitance (µF)	Global Part Number†	Nominal Case Size* D×L (mm)	Case Size Code	Maximum ESR (mΩ) at +25°C, 120Hz	Rated Ripple Current (A rms) at +85°C		
						120Hz	300Hz	>3kHz
500 Volts 550 Volts Surge	4,700	E32F501CPN472MFD0M	89 × 130	FD0	34	16.6	19.9	23.3
	4,700	E32F501CPN472MFK0M	89 × 190	FK0	30	21.1	27.4	31.6
	5,600	E32F501CPN562MFE3M	89 × 143	FE3	29	18.9	22.7	26.4
	5,600	E32F501CPN562MFN0M	89 × 220	FN0	25	24.5	31.8	36.7
	8,200	E32F501CPN822MFK0M	89 × 190	FK0	20	25.9	31.1	36.3

†For terminal, mounting and construction options, refer to the part numbering system for descriptions and codes.
*** Refer to diagram of dimensions for detailed case size specifications.**